Lat. 17, C.I.S.

SANITARY SEWER IMPROVEMENTS

to serve

REECE FARMS ESTATES

CITY OF WICHITA, KANSAS

Michael E. Lindebak, P.E. City Engineer

Project Number

468-82880

Index Code:

743484

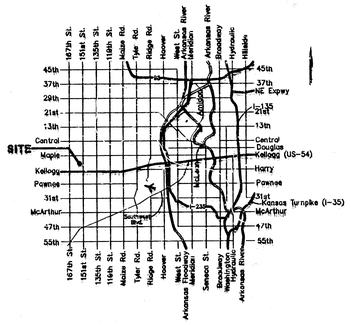

Vicinity Map

Benchmark

Top of 1" Iron 12" Deep E1/4 Cor.
Sec. 27, Twp. 27-S, R-2-W
Elev. = 1396.53 M.S.L.
(209.13 City Datum)

Sheet Index

Title Sheet	1
Line 1	2R
Lines 1 & 1A	3
Line 1	4
Lines 1 & 1C	5
Line 1B & 2	6
Line 3	6A
Lines 3, 3A & 3B	6B
Standard Manhole Detail	7
Shallow Manhole Detail	8
Ring & Cover Detail	9
4" Vertical Riser Detail	10
Copy of Plat	11

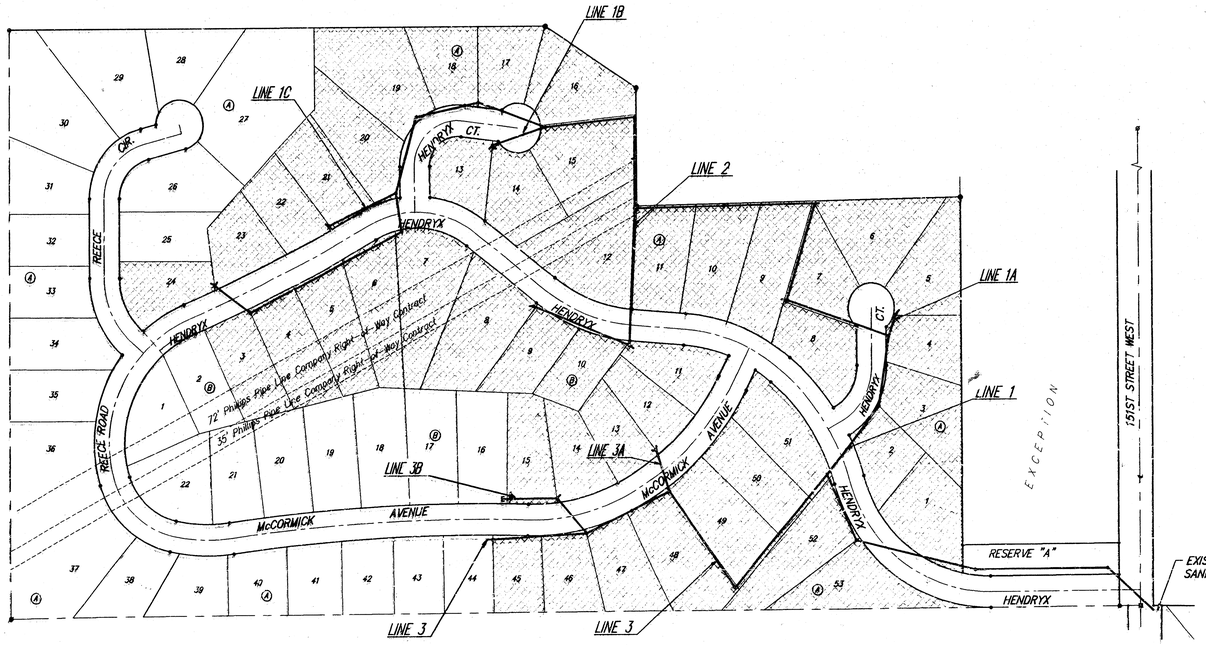

Scale: 1" = 150'

GENERAL NOTES:

1. *Contractor will be required to provide notice to utility companies a minimum of twenty-four (24) hours prior to any excavation, as follows:*

Kansas One-Call	*687-2470*

   The Contractor must notify the following in case of an emergency:

Multimedia Cablevision	*262-0661*
K.P.L. Gas Service Company	*383-8650*
Kansas Gas & Electric Company	*383-8600*
Peoples Gas Company	*942-8350*
Southwestern Bell Telephone Company	*1-571-2611*
City of Wichita Water Dept.	*268-4908*
City of Wichita Traffic Engineering	*269-4446*

2. *Underground utility service lines and overhead utility pole lines are to be adjusted as necessary by others prior to construction unless the plans specifically call for their adjustment by the Contractor or unless the plans specifically identify a utility to be adjusted by its owner during construction. Existing utilities and their location, as shown on the plans, represent the best information obtainable for design. The Contractor will be required to work around existing utilities within the right-of-way which do not conflict with proposed construction.*

3. *Trees and shrubs in public right-of-way which are in direct conflict with proposed new construction shall be removed by the Contractor with the Engineer's approval. Trees and shrubs which are not in direct conflict with proposed new construction shall be saved and protected from damage.*

4. *The Contractor shall give all property owners and/or tenants of developed property abutting the construction of this project a minimum of ten (10) days advance notice prior to start of construction.*

5. *The Contractor shall be responsibie for preserving property irons. The Contractor will be required to re-establish any property irons which are damaged or destroyed by his construction operations. Such irons shall be re-established by a licensed land surveyor in accordance with state laws.*

6. *All areas disturbed by construction operations shall by seeded with rye grass at a rate of 300 lbs/acre immediately following construction in that area. Prior to seeding, area shall be prepared per City specs.*

7. *The Contractor shall be responsible for maintaining continuous flow of sewage through construction. Contractor's proposed method for maintaining sewage flow shall be approved by the Engineer. Cost of maintaining flow of sewage through construction will not be paid for directly and this cost shall be considered as subsidiary to the other pay items of work.*

8. *Although there is no easement grading over the sanitary sewer line in this project, Contractor shall fill to finished grade around manhole within 10' of manhole. All easement grading shall be performed by street contractor during the pavement construction phase of this project.*

Booked
P-81, P-82
6-14-99

AS BUILT
RDL

Benefit District



Revised 7-10-98 DMV

BAUGHMAN COMPANY P.A.
ENGINEERING, SURVEYING, & PLANNING
316-262-7271 • 315 ELLIS • WICHITA, KANSAS 67211

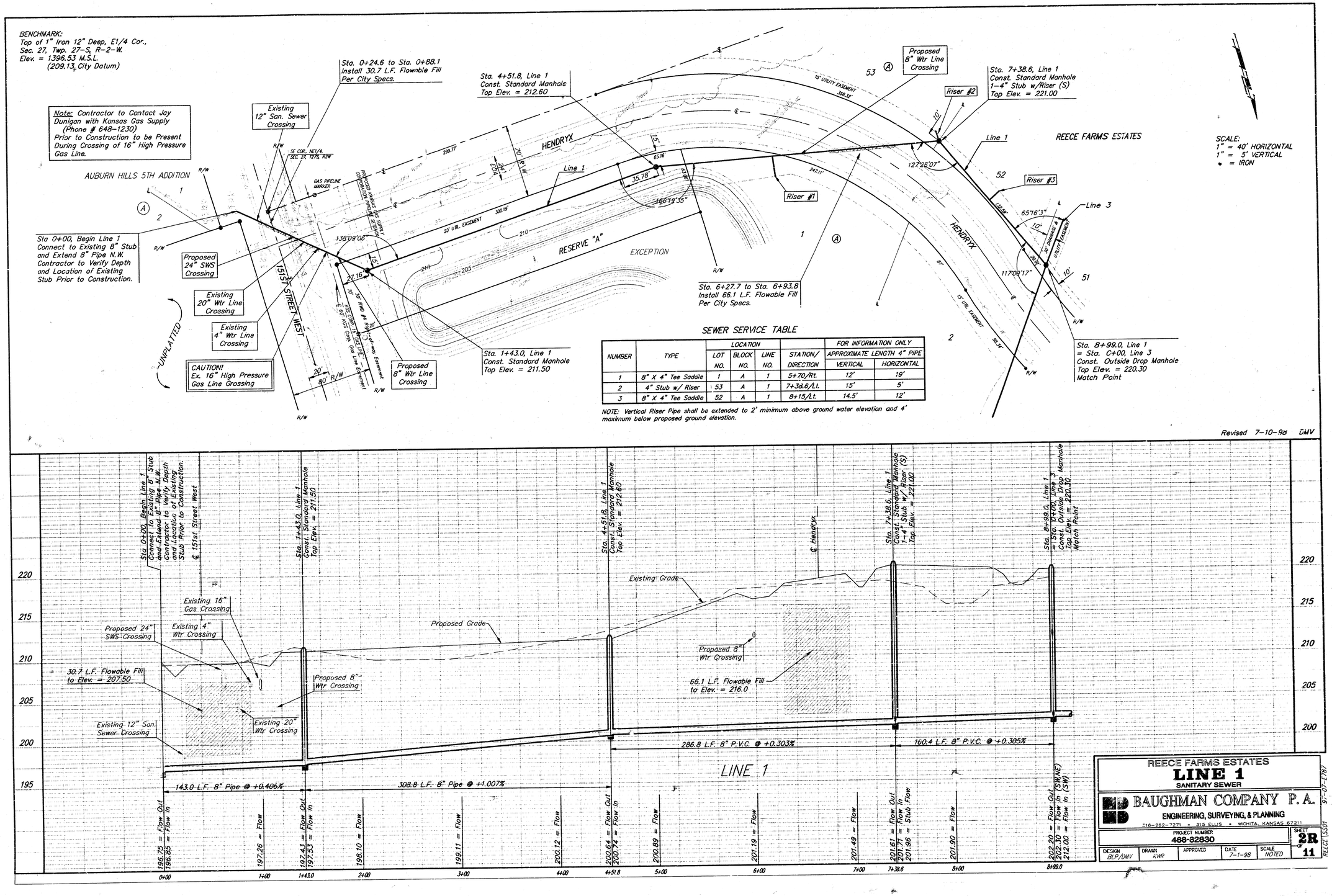

SEWER SERVICE TABLE

NUMBER	TYPE	LOCATION LOT NO.	LOCATION BLOCK NO.	LOCATION LINE NO.	STATION/ DIRECTION	FOR INFORMATION ONLY APPROXIMATE LENGTH 4" PIPE VERTICAL	FOR INFORMATION ONLY APPROXIMATE LENGTH 4" PIPE HORIZONTAL
1	8" X 4" Tee Saddle	1	A	1	5+70/Rt.	12'	19'
2	4" Stub w/ Riser	53	A	1	7+38.6/Lt.	15'	5'
3	8" X 4" Tee Saddle	52	A	1	8+15/Lt.	14.5'	12'

NOTE: Vertical Riser Pipe shall be extended to 2' minimum above ground water elevation and 4' maximum below proposed ground elevation.

REECE FARMS ESTATES
LINE 1
SANITARY SEWER

BAUGHMAN COMPANY P.A.
ENGINEERING, SURVEYING, & PLANNING
316-262-7271 • 315 ELLIS • WICHITA, KANSAS 67211

PROJECT NUMBER	SHEET
468-82830	2R OF 11

DESIGN	DRAWN	APPROVED	DATE	SCALE
BLP/DMV	KWR		7-1-98	NOTED

REECE SS01 97-07-E787

BENCHMARK:
Top of 1" Iron 12" Deep, E1/4 Cor.,
Sec. 27, Twp. 27-S, R-2-W.
Elev. = 1396.53 M.S.L.
(209.13 City Datum)

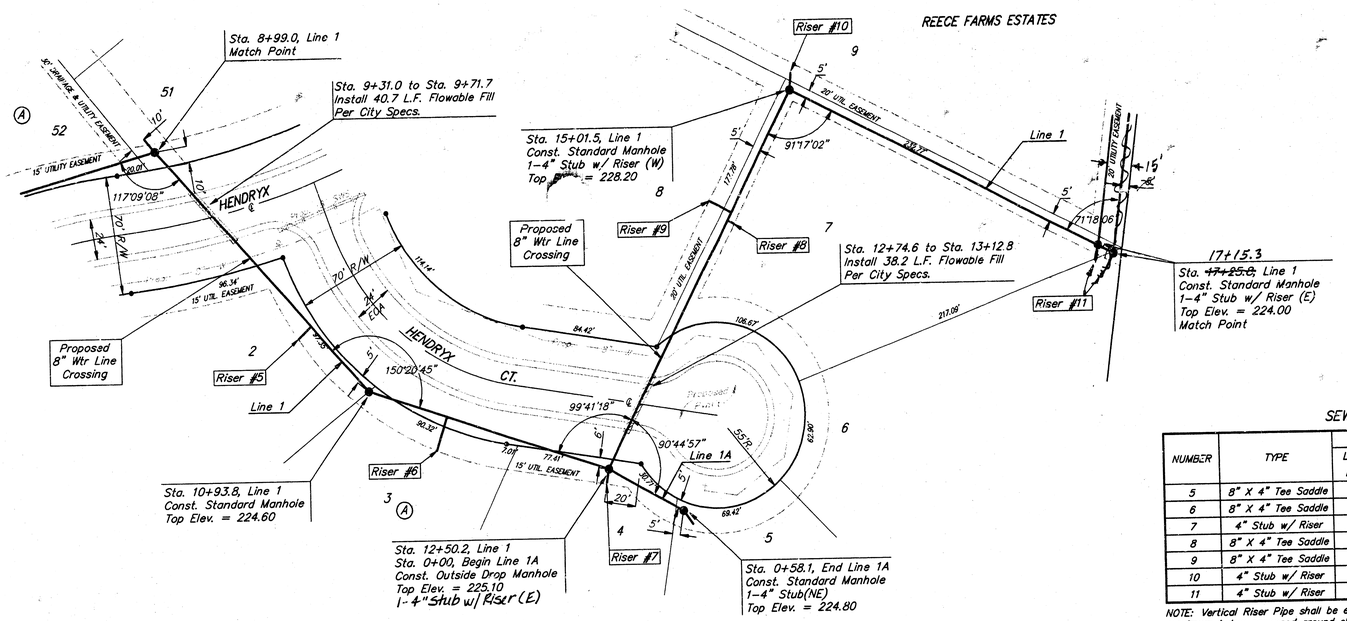

SCALE:
1" = 40' HORIZONTAL
1" = 5' VERTICAL
• = IRON

SEWER SERVICE TABLE

NUMBER	TYPE	LOCATION			STATION/ DIRECTION	FOR INFORMATION ONLY APPROXIMATE LENGTH 4" PIPE	
		LOT NO.	BLOCK NO.	LINE NO.		VERTICAL	HORIZONTAL
5	8" X 4" Tee Saddle	2	A	1	10+41/Rt.	17.5'	11'
6	8" X 4" Tee Saddle	3	A	1	11+45/Rt.	17'	21'
7	4" Stub w/ Riser	4	A	1	12+50.2/Rt.	17.5'	8'
8	8" X 4" Tee Saddle	7	A	1	14+15/Rt.	20.5'	5'
9	8" X 4" Tee Saddle	8	A	1	14+20/Lt.	20.5'	15'
10	4" Stub w/ Riser	9	A	1	15+01.5/Lt.	19.5'	15'
11	4" Stub w/ Riser	6	A	1	~~17+25.8~~/Rt.	14.5'	5'

NOTE: Vertical Riser Pipe shall be extended to 2' minimum above ground water elevation and 4' maximum below proposed ground elevation.

17+15.3

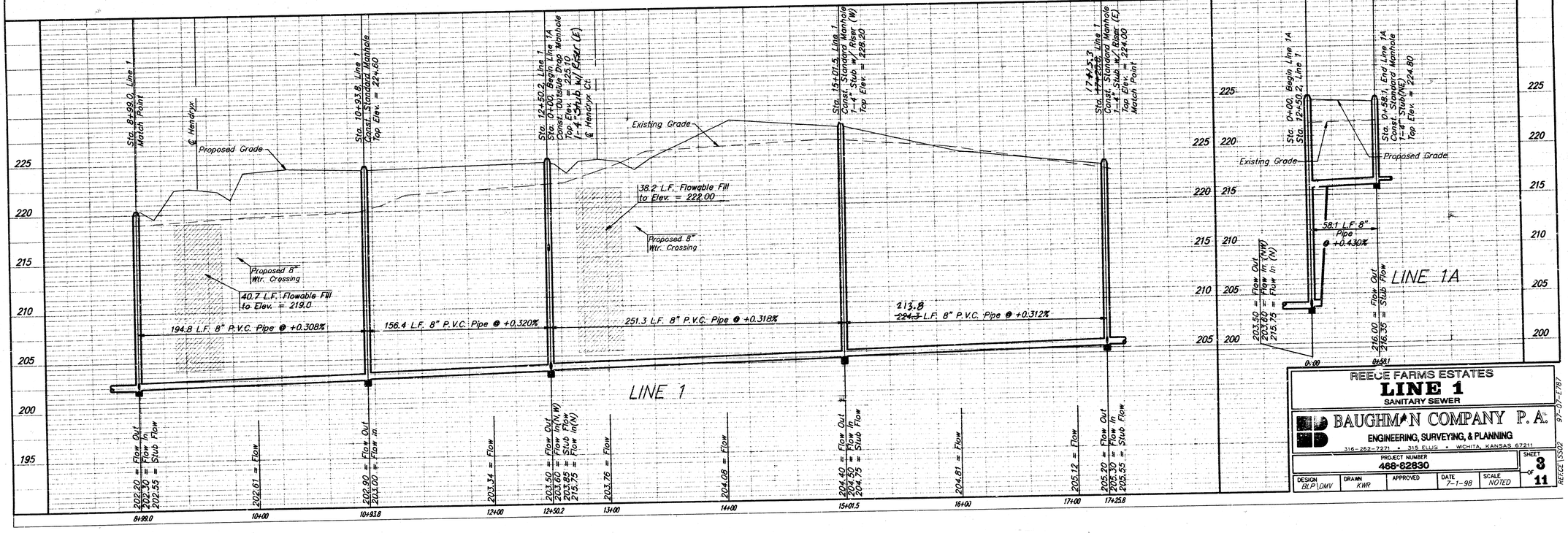

REECE FARMS ESTATES
LINE 1
SANITARY SEWER

BAUGHMAN COMPANY P.A.
ENGINEERING, SURVEYING, & PLANNING
316-262-7271 • 315 ELLIS • WICHITA, KANSAS 67211

PROJECT NUMBER	SHEET
468-82830	3 OF 11

DESIGN	DRAWN	APPROVED	DATE	SCALE
BLP\DMV	KWR		7-1-98	NOTED

97-07-E787
REECE\SSDD

BENCHMARK:
Top of 1" Iron 12" Deep, E1/4 Cor.,
Sec. 27, Twp. 27-S, R-2-W.
Elev. = 1396.53 M.S.L.
(209.13 City Datum)

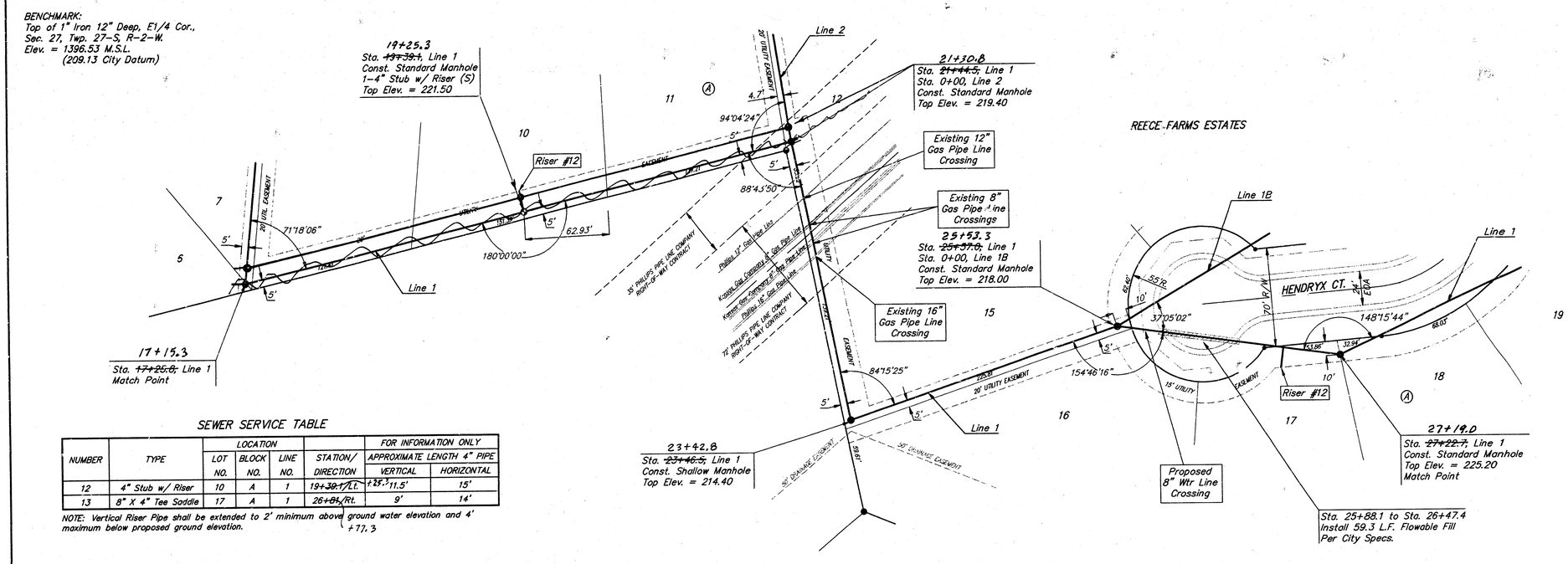

SCALE:
1" = 40' HORIZONTAL
1" = 5' VERTICAL
● = IRON

SEWER SERVICE TABLE

NUMBER	TYPE	LOCATION			STATION/ DIRECTION	FOR INFORMATION ONLY	
		LOT NO.	BLOCK NO.	LINE NO.		APPROXIMATE LENGTH 4" PIPE VERTICAL	HORIZONTAL
12	4" Stub w/ Riser	10	A	1	~~19+30.1~~/Lt. ~~25.~~ +77.3	11.5'	15'
13	8" X 4" Tee Saddle	17	A	1	26+~~81~~/Rt.	9'	14'

NOTE: Vertical Riser Pipe shall be extended to 2' minimum above ground water elevation and 4' maximum below proposed ground elevation.

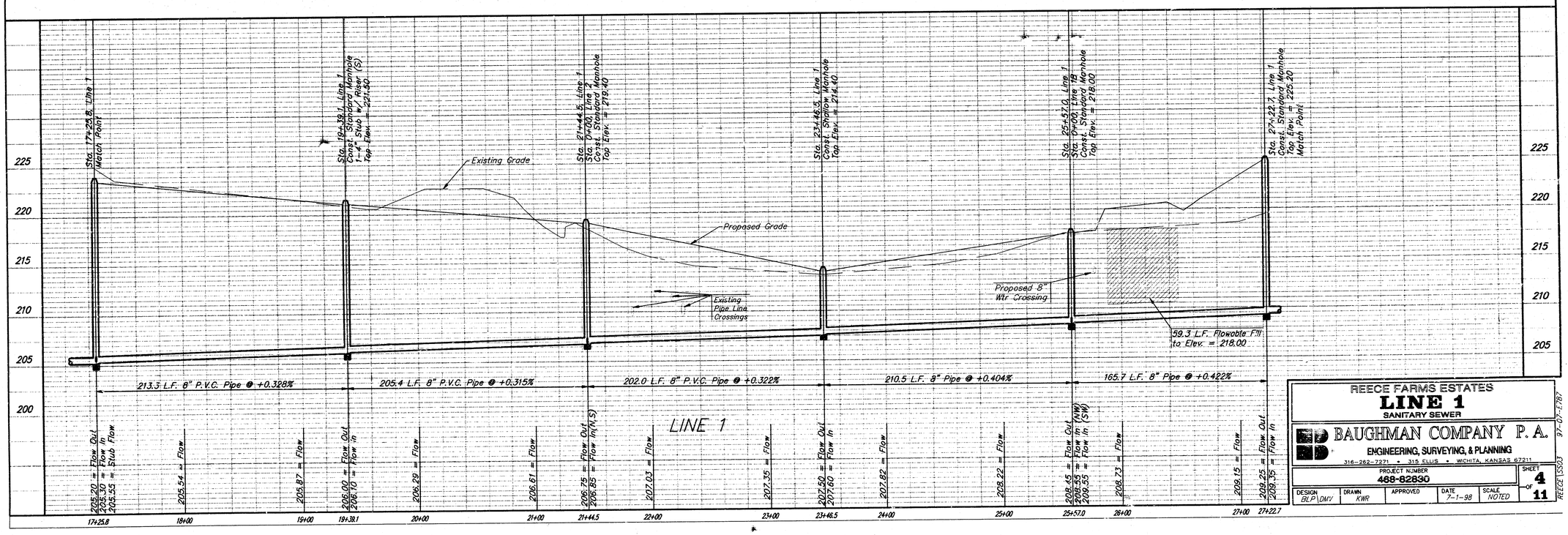

205.20 = Flow Out
205.30 = Flow In
205.55 = Stub Flow
205.54 = Flow
206.87 = Flow
206.00 = Flow Out
206.10 = Flow In
206.29 = Flow
206.61 = Flow
206.75 = Flow Out
206.85 = Flow In(N.S)
207.03 = Flow
207.35 = Flow
207.50 = Flow Out
207.60 = Flow In
207.82 = Flow
208.22 = Flow
208.45 = Flow Out (NW)
208.55 = Flow In (SW)
208.55 = Flow In
208.73 = Flow
209.15 = Flow
209.25 = Flow Out
209.35 = Flow In

REECE FARMS ESTATES
LINE 1
SANITARY SEWER

BAUGHMAN COMPANY P.A.
ENGINEERING, SURVEYING, & PLANNING
316-262-7271 • 315 ELLIS • WICHITA, KANSAS 67211

PROJECT NUMBER 488-82890
SHEET 4 OF 11

DESIGN	DRAWN	APPROVED	DATE	SCALE
BLP \ DMV	KWR		7-1-98	NOTED

97-07-1787
REECE\SS03

SEWER SERVICE TABLE

NUMBER	TYPE	LOCATION			STATION/ DIRECTION	FOR INFORMATION ONLY	
		LOT NO.	BLOCK NO.	LINE NO.		APPROXIMATE LENGTH 4" PIPE VERTICAL	HORIZONTAL
13	8" X 4" Tee Saddle	18	A	1	27+~~85~~/Rt.	~~51.3~~ 10'	16'
14	4" Stub w/ Riser	19	A	1	28+~~72.0~~/Rt.	~~68.8~~ 13.5'	5'
15	4" Stub w/ Riser	20	A	1	30+~~46.4~~/Rt.	~~82.7~~ 15'	5'
16	4" Stub w/ Riser	7	B	1	31+~~33.4~~/Lt.	~~28.7~~ 17'	5'
17	8" X 4" Tee Saddle	6	B	1	32+~~18~~/Lt.	~~12.3~~ 15.5'	4'
18	8" X 4" Tee Saddle	5	B	1	33+~~48~~/Lt.	~~14.3~~ 13'	8'
19	8" X 4" Tee Saddle	4	B	1	34+~~20~~/Lt.	~~46.3~~ 12'	7'
20	8" X 4" Tee Saddle	21	A	1C	1+21/Rt.	8.5'	8'

NOTE: Vertical Riser Pipe shall be extended to 2' minimum above ground water elevation and 4' maximum below proposed ground elevation.

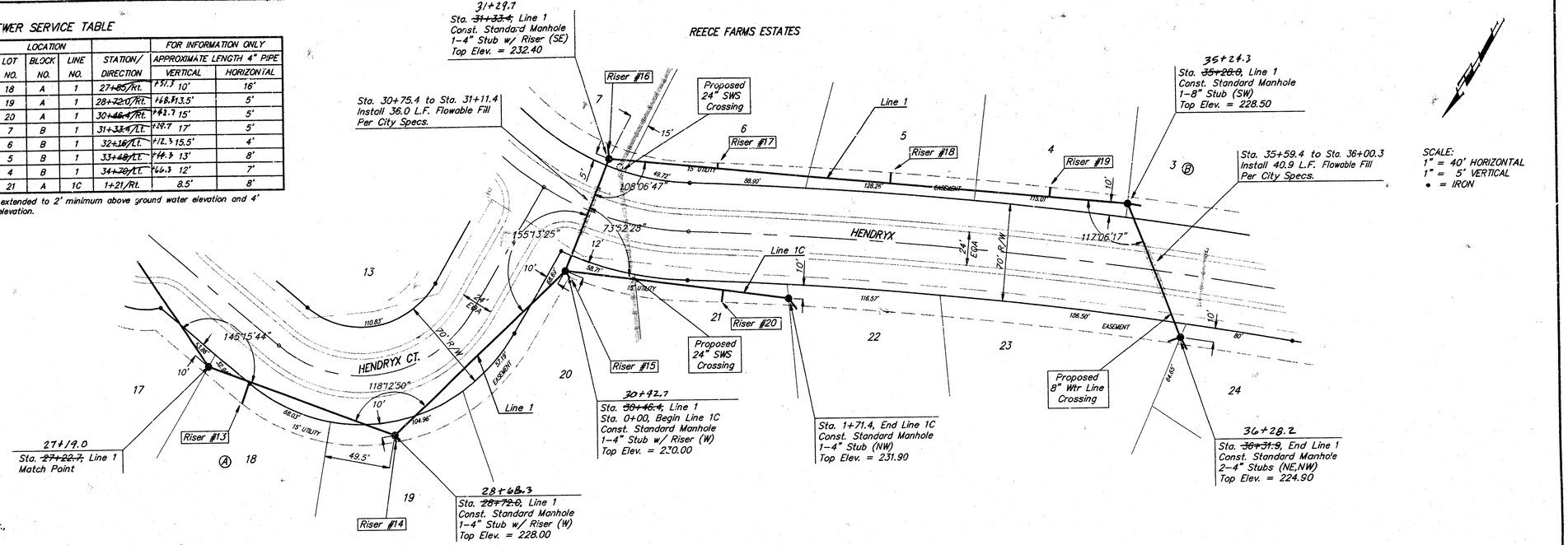

BENCHMARK:
Top of 1" Iron 12" Deep, E1/4 Cor.,
Sec. 27, Twp. 27-S, R-2-W.
Elev. = ~~1296.53~~ M.S.L.
(~~209.13~~ City Datum)

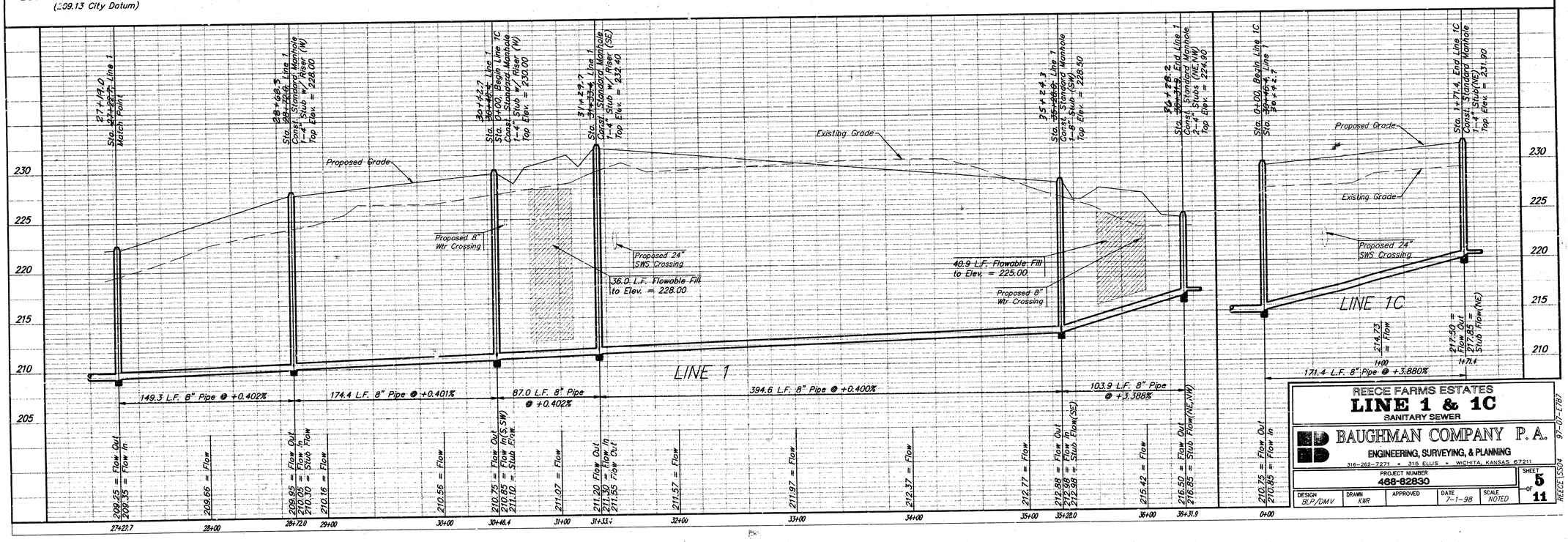

REECE FARMS ESTATES
LINE 1 & 1C
SANITARY SEWER

BAUGHMAN COMPANY P.A.
ENGINEERING, SURVEYING, & PLANNING
316-262-7271 • 315 ELLIS • WICHITA, KANSAS 67211

PROJECT NUMBER	SHEET
468-82830	5 OF 11

DESIGN	DRAWN	APPROVED	DATE	SCALE
BLP/DMV	KWR		7-1-98	NOTED

97-07-E787
REECE1S504

BENCHMARK:
Tap of 1" Iron 12" Deep, E1/4 Cor.,
Sec. 27, Twp. 27-S, R-2-W.
Elev. = 1396.53 M.S.L.
(209.13 City Datum)

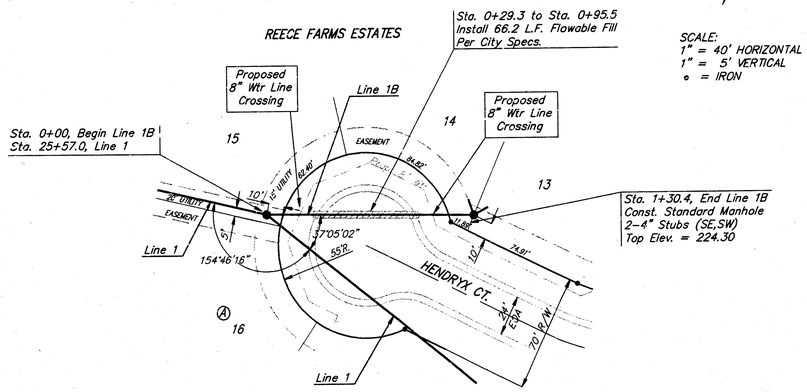

SCALE:
1" = 40' HORIZONTAL
1" = 5' VERTICAL
• = IRON

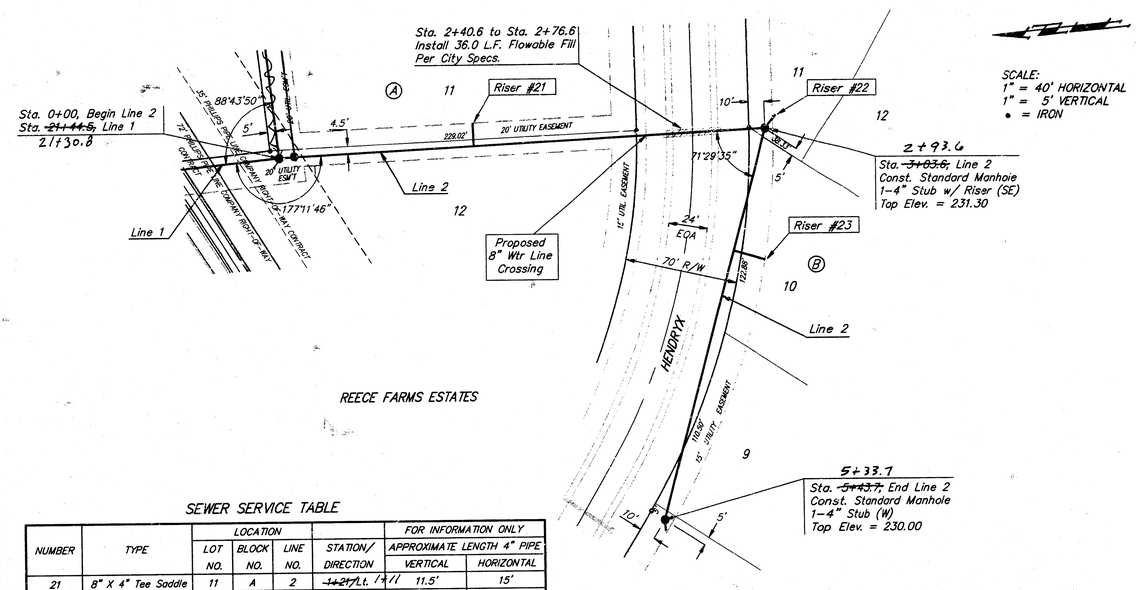

SCALE:
1" = 40' HORIZONTAL
1" = 5' VERTICAL
• = IRON

SEWER SERVICE TABLE

NUMBER	TYPE	LOCATION			STATION/ DIRECTION	FOR INFORMATION ONLY	
		LOT NO.	BLOCK NO.	LINE NO.		APPROXIMATE LENGTH 4" PIPE VERTICAL	HORIZONTAL
21	8" X 4" Tee Saddle	11	A	2	~~1+21~~/Lt. 1+11	11.5'	15'
22	4" Stub w/ Riser	11	B	2	~~3+03.6~~/Lt.	9'	5'
23	8" X 4" Tee Saddle	10	B	2	~~3+79~~/Lt.	8.5'	20'

NOTE: Vertical Riser Pipe shall be extended to 2' minimum above ground water elevation and 4' maximum below proposed ground elevation.

3+69
2+93.6

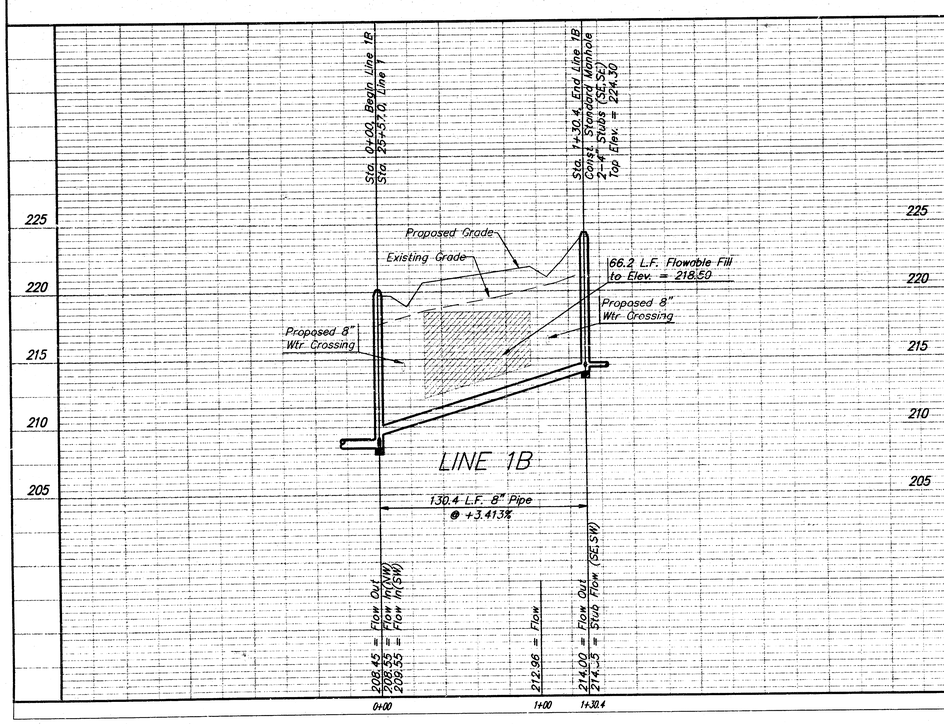

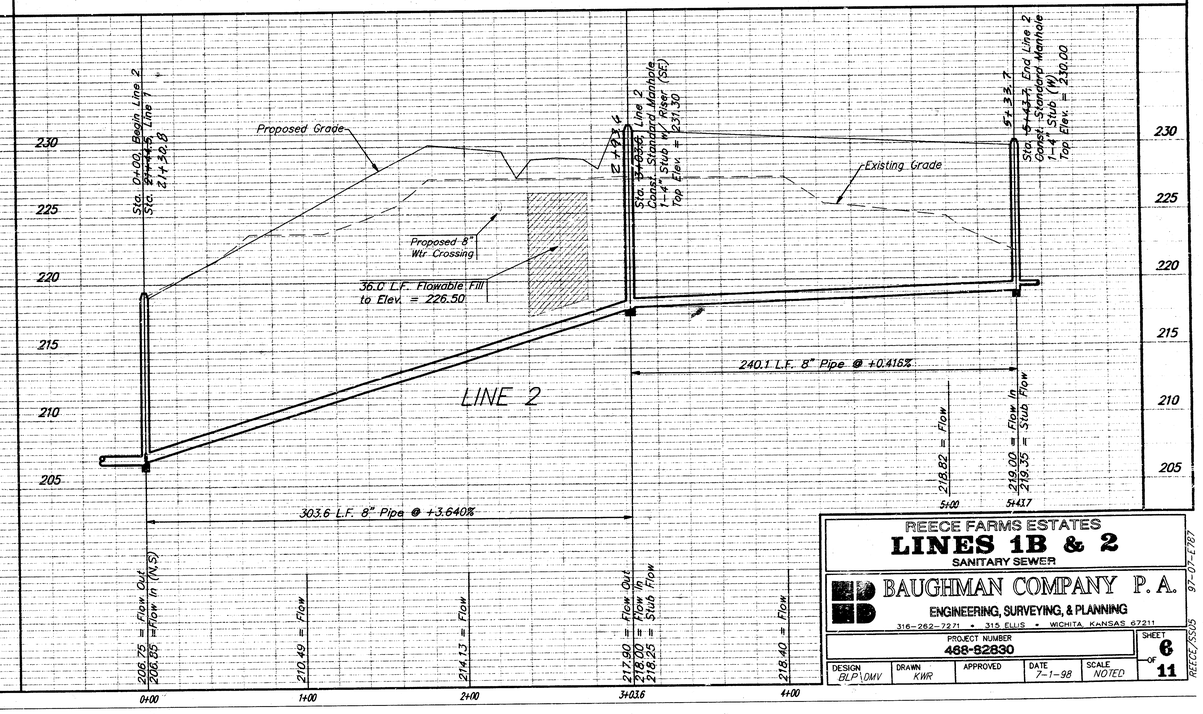

REECE FARMS ESTATES
LINES 1B & 2
SANITARY SEWER

BAUGHMAN COMPANY P. A.
ENGINEERING, SURVEYING, & PLANNING
316-262-7271 • 315 ELLIS • WICHITA, KANSAS 67211

PROJECT NUMBER	SHEET
468-82830	6 OF 11

DESIGN	DRAWN	APPROVED	DATE	SCALE
BLP\DMV	KWR		7-1-98	NOTED

9-01-1987
REECE\SSHS

BENCHMARK:
Top of 1" Iron 12" Deep, E1/4 Cor.,
Sec. 27, Twp. 27-S, R-2-W.
Elev. = 1396.53 M.S.L.
(209.13 City Datum)

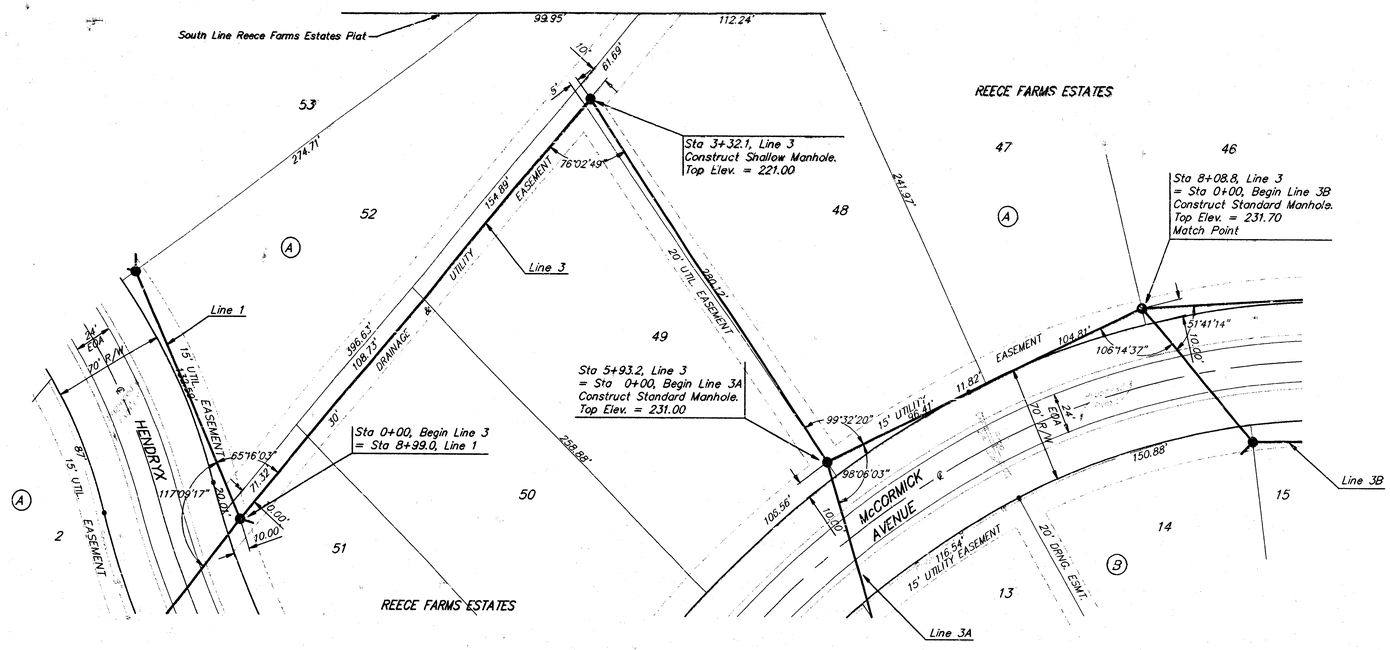

SCALE:
1" = 40' HORIZONTAL
1" = 5' VERTICAL
● = IRON

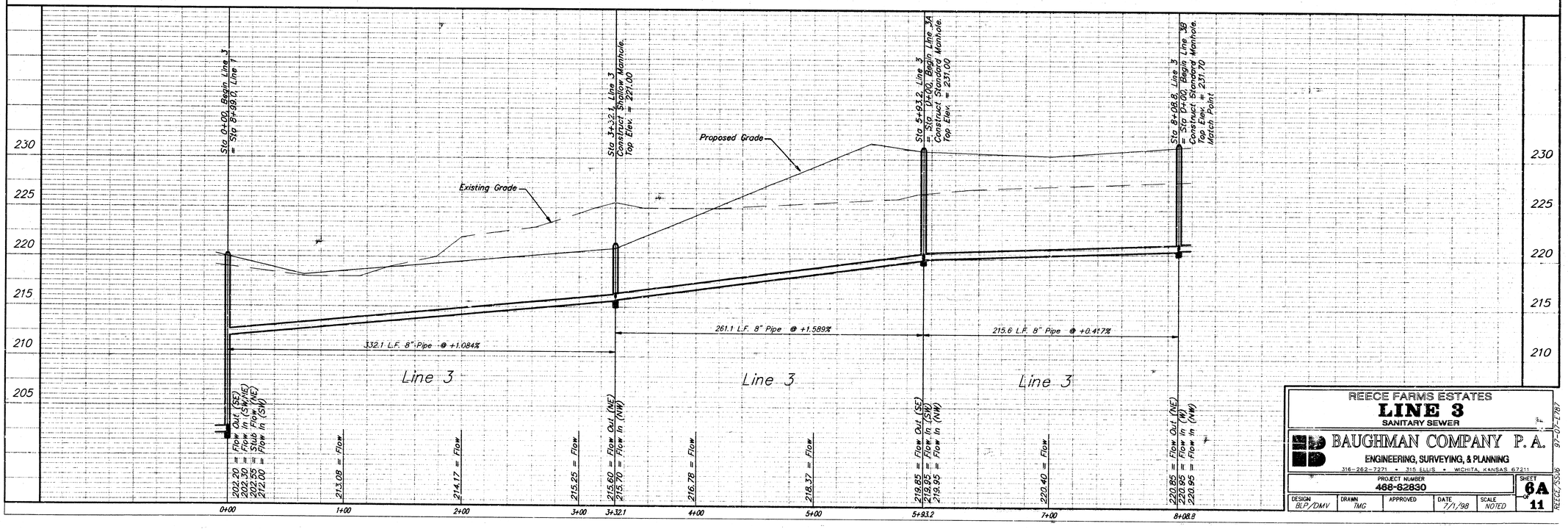

REECE FARMS ESTATES
LINE 3
SANITARY SEWER

BAUGHMAN COMPANY P. A.
ENGINEERING, SURVEYING, & PLANNING
316-262-7271 • 315 ELLIS • WICHITA, KANSAS 67211

PROJECT NUMBER	SHEET
468-82830	6A OF 11

DESIGN	DRAWN	APPROVED	DATE	SCALE
BLP/DMV	TMG		7/1/98	NOTED

97-07-1787
REECE.SSUB

BENCHMARK:
Top of 1" iron 12" Deep, E1/4 Cor.,
Sec. 27, Twp. 27-S, R-2-W.
Elev. = 1396.53 M.S.L.
(209.13 City Datum)

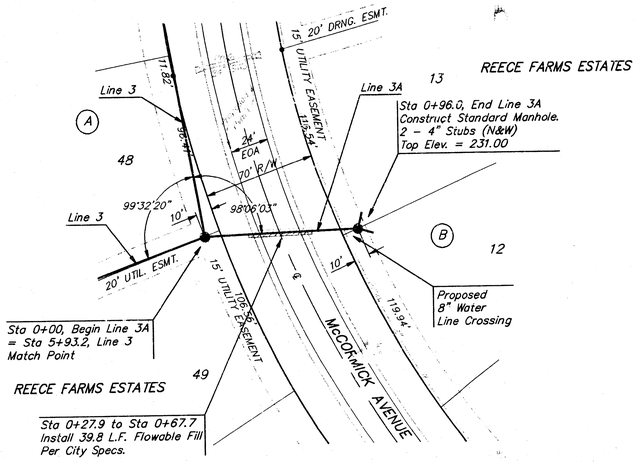

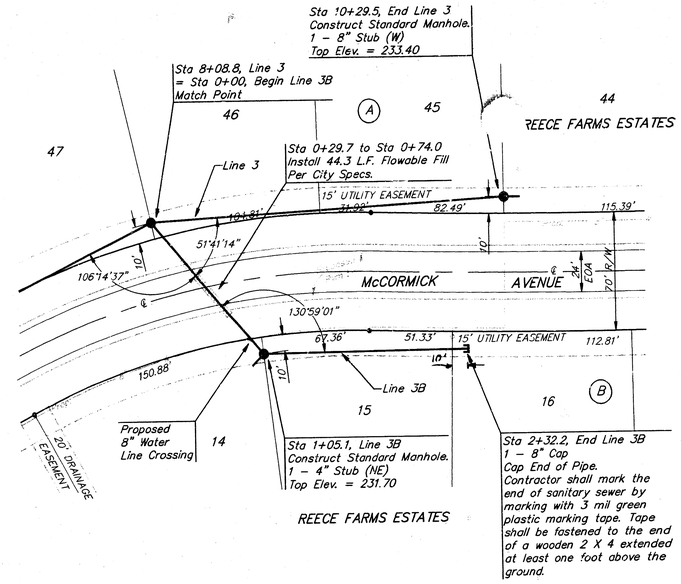

SCALE:
1" = 40' HORIZONTAL
1" = 5' VERTICAL
● = IRON

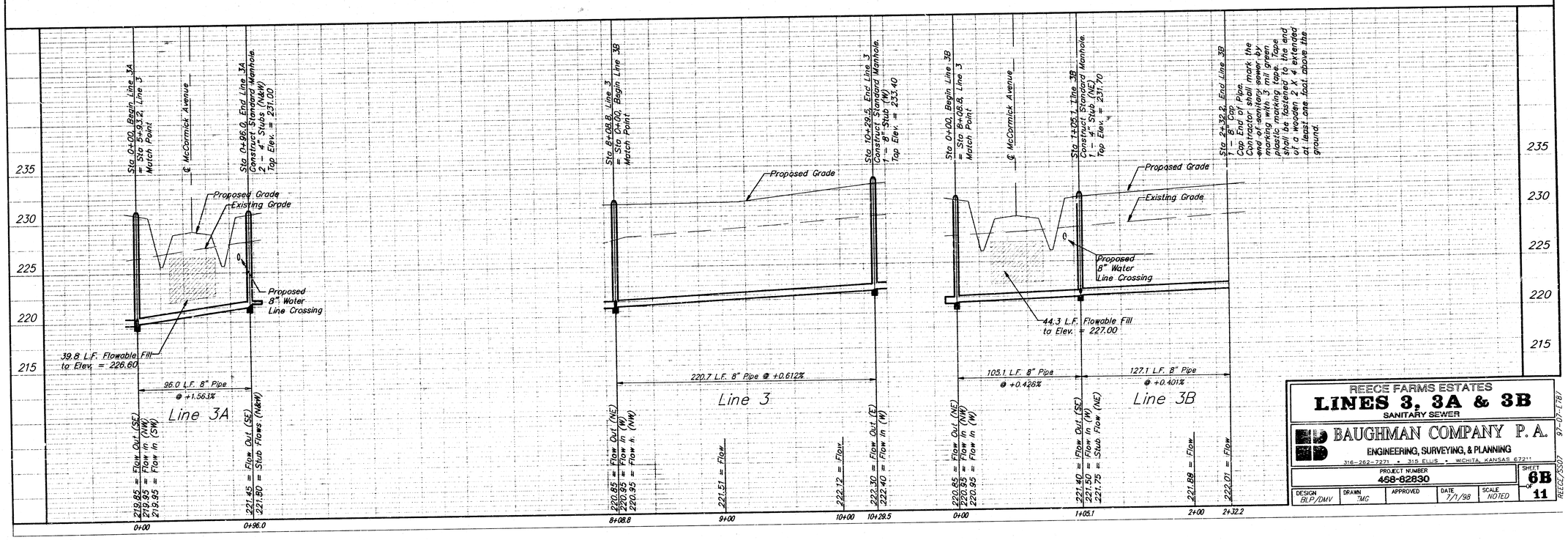

REECE FARMS ESTATES
LINES 3, 3A & 3B
SANITARY SEWER

BAUGHMAN COMPANY P. A.
ENGINEERING, SURVEYING, & PLANNING
316-262-7271 • 315 ELLIS • WICHITA, KANSAS 67211

PROJECT NUMBER	SHEET
468-82830	6B OF 11

DESIGN	DRAWN	APPROVED	DATE	SCALE
BLP/DMV	JMG		7/1/98	NOTED

97-07-1787
REECE/SS07

SEWER APPURTENANCES DETAILS

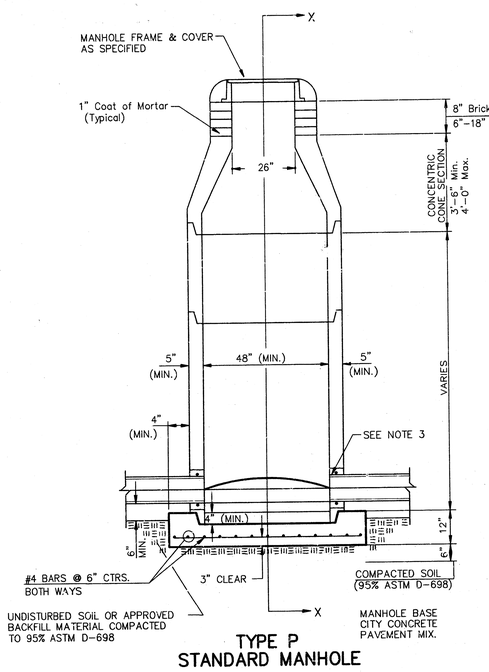

TYPE P
STANDARD MANHOLE

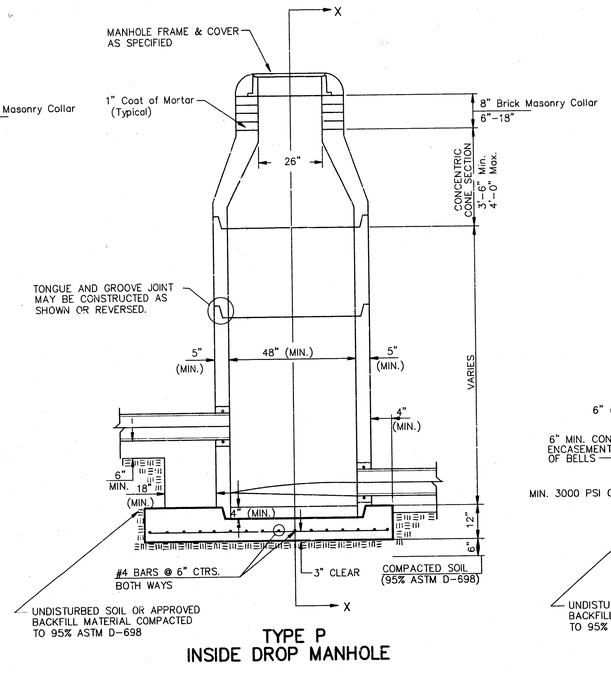

TYPE P
INSIDE DROP MANHOLE

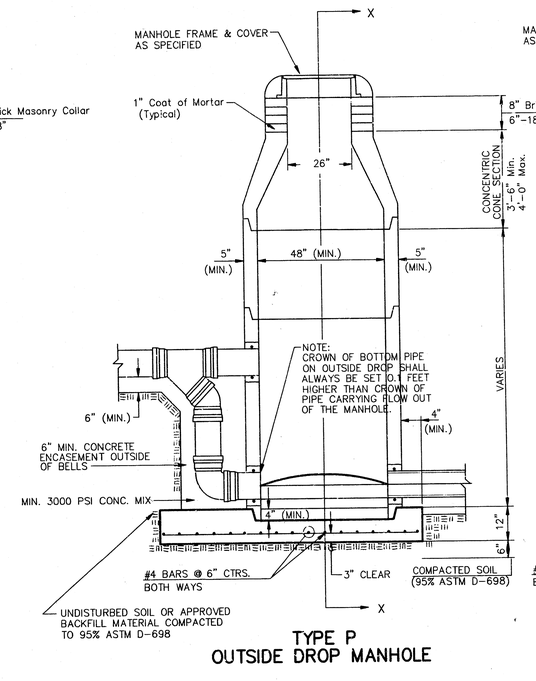

TYPE P
OUTSIDE DROP MANHOLE

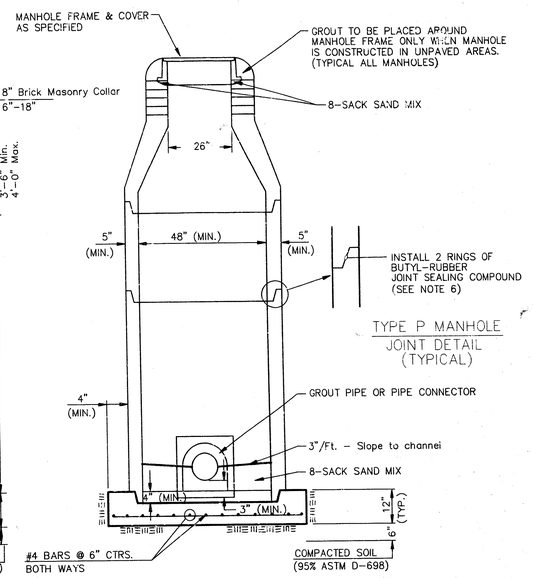

SECTION X
(TYPICAL)

GENERAL NOTES

PRECAST MANHOLE NOTES

1. ALL PRECAST CONCRETE MANHOLE SECTIONS SHALL CONFORM TO THE LATEST REVISIONS OF A.S.T.M. C478 AS MODIFIED BY THE SPECIFICATIONS.
2. NON-SHRINK GROUT SHALL BE NON-METALLIC TYPE.
3. APPROVED FLEXIBLE WATERSTOP GASKETS SHALL BE INSTALLED TO JOIN THE SEWER TO THE MANHOLE WALL WHEN A.B.S. COMPOSITE PIPE OR P.V.C. PIPE IS USED. FOR OTHER TYPES OF PIPE THE SEWER SHALL BE GROUTED IN PLACE WITH NON-SHRINK GROUT. THE SEWER PIPE SHALL BE SUPPORTED WITH CONCRETE ENCASEMENT A MINIMUM OF 3 FEET FROM THE MANHOLE WALL AND TO THE FIRST JOINT FOR V.C.P. SUCH THAT THE JOINT REMAINS FLEXIBLE.
4. ALL INSIDE SURFACES OF THE CONCRETE MANHOLE WHICH WOULD BE EXPOSED TO SEWER GAS SHALL BE COATED WITH 2 COATS TNEMEC SERIES 66 HI-BUILD EPOXOLINE, DRY THICKNESS OF 8 MILS (MIN.)
5. EXTERIOR MANHOLE WALLS SHALL BE COATED WITH 1 COAT MOBILARMA 633 BITUMINOUS COATING.
6. JOINT SEALING COMPOUND SHALL BE KENT SEAL NO. 2 OR APPROVED EQUAL.
7. PRECAST MANHOLES SHALL BE SET AT LEAST 4 INCHES INTO THE MANHOLE BASE.
8. TOP OF MANHOLE FLOOR SLAB SHALL BE AT LEAST 3 INCHES BELOW THE FLOW LINE OF THE OUTLET PIPE TO INSURE SUFFICIENT MINIMUM THICKNESS OF SHAPED INVERT.
9. LIFTING HOLES SHALL BE FILLED WITH NON-SHRINK GROUT AND THE INTERIOR SURFACE COATED AS SPECIFIED.
10. MORTAR USED IN MASONRY CONSTRUCTION SHALL CONTAIN 8 SACKS OF CEMENT PER CUBIC YARD. CONCRETE USED IN MANHOLE BASES SHALL CONFORM TO THE REQUIREMENTS OF CONCRETE FOR CONCRETE PAVEMENT CONSTRUCTION AS SPECIFIED IN THE CITY STANDARD PAVING SPECIFICATIONS USING CITY CONCRETE PAVEMENT MIX WITHOUT AIR ENTRAINING ADMIXTURE. MORTAR SHALL BE PLACED AROUND THE MANHOLE RING AS SHOWN ON THE DRAWINGS WHEN MANHOLES ARE CONSTRUCTED IN UNPAVED AREAS. MANHOLES CONSTRUCTED WHERE PIPE SIZES ARE SMALLER THAN 24" SHALL HAVE AN INSIDE DIAMETER OF 4'. MANHOLES CONSTRUCTED WHERE PIPE SIZES ARE 24" OR LARGER SHALL HAVE AN INSIDE DIAMETER OF 5'. COMPLETED MANHOLE SHALL BE WITHOUT LEAKS AND WATER TIGHT.
11. REINFORCING STEEL SHALL BE INSTALLED IN THE MANHOLE BASES AND SHALL CONSIST OF NO. 4 BARS PLACED ON 6" CENTERS IN BOTH DIRECTIONS. THE MANHOLE BASE REINFORCEMENT SHALL BE PLACED AT LEAST 3" ABOVE THE BOTTOM OF THE MANHOLE BASE. ALL COSTS FOR FURNISHING AND INSTALLING REINFORCING STEEL SHALL BE INCLUDED IN THE UNIT PRICE BID FOR THE MANHOLE.
12. OPENINGS SHALL BE CUT INTO THE MANHOLE WALL WHEN OUTSIDE DROPS ARE CONSTRUCTED ON EXISTING MANHOLES. SUCH OPENINGS CUT INTO EXISTING MANHOLES SHALL BE AS SMALL AS PRACTICAL TO FACILITATE INSTALLING AND GROUTING THE NEW PIPE IN PLACE. WATERSTOP GASKETS SHALL BE USED WITH P.V.C. AND A.B.S. COMPOSITE PIPE. THE NEW PIPE SHALL BE GROUTED INTO THE OPENING USING AN APPROVED NONSHRINK GROUT FOR THE FULL MANHOLE WALL THICKNESS. THE EXTERIOR OF THE COMPLETED CONNECTION SHALL BE SEALED WITH AN APPROVED BITUMINOUS COATING SUCH THAT THE CONNECTION WILL BE WATER TIGHT. FLOOR OF MANHOLE SHALL BE MODIFIED TO FORM NEW FLOW CHANNEL FOR THE NEW CONNECTION AS INDICATED BY THE DRAWING. THIS WORK, INCLUDING MODIFICATION OF MANHOLE FLOOR, SHALL BE PAID FOR AT THE UNIT PRICE BID FOR OUTSIDE DROP STACK CONSTRUCTED ON EXISTING MANHOLE.
13. THE FLOORS OF ALL MANHOLES SHALL BE SHAPED WITH FLOW CHANNELS SUCH THAT THE MANHOLES WILL BE SELF CLEANING AND FREE OF AREAS WHERE SOLIDS COULD BE DEPOSITED AS SEWAGE FLOWS THROUGH THE MANHOLE FROM ALL INLET PIPES TO THE OUTLET PIPE. FLOW CHANNELS SHALL BE FORMED TO MATCH THE BOTTOM HALVES OF THE INFLOWING PIPES AND THE OUTFLOWING PIPE AS SHOWN BY THE DRAWINGS EXCEPT FOR INSIDE DROP MANHOLES. FLOW CHANNELS FOR INSIDE DROP MANHOLES SHALL BE CONSTRUCTED AS INDICATED BY THE DRAWING. MANHOLE FLOORS SHALL HAVE SLOPES OF 3 INCHES PER FOOT IN THE AREAS OUTSIDE OF THE FLOW CHANNELS SLOPED TOWARD THE FLOW CHANNELS. PIPES LAID THROUGH MANHOLES SHALL HAVE THE TOP HALF REMOVED TO NEAT LINES FOR THE FULL INSIDE DIAMETER OF THE MANHOLE. MANHOLE FLOORS SHALL THEN BE SHAPED AROUND THE BOTTOM HALF OF THE PIPE WHICH FORMS THE FLOW CHANNEL.
14. PIPES INSTALLED WITHIN THE EXCAVATION MADE FOR THE MANHOLE SHALL BE CRADLED WITH CONCRETE TO THE LIMITS OF THE MANHOLE EXCAVATION. WHEN CLAY PIPE IS USED, THE CRADLE SHALL EXTEND TO THE FIRST JOINT OUTSIDE THE MANHOLE. THE CRADLE SHALL BE TERMINATED AT THE CLAY PIPE JOINT IN A MANNER WHICH WILL MAINTAIN THE FLEXIBILITY OF THE JOINT. COST OF CRADLE WITHIN MANHOLE EXCAVATION OR TO CLAY PIPE JOINTS ADJACENT TO MANHOLE SHALL BE INCLUDED IN THE UNIT PRICE BID FOR THE MANHOLE.
15. MANHOLE COVER CASTINGS AND MANHOLE FRAME CASTINGS SHALL CONFORM TO THE REQUIREMENTS AS INDICATED IN THE STANDARD SPECIFICATIONS AND AS SHOWN IN THE STANDARD DETAIL DRAWING.
16. THE VERTICAL DROP IN INSIDE DROP MANHOLES SHALL NOT EXCEED 2' FOR INFLOWING PIPES SIZED 12" OR SMALLER AND 2' FOR INFLOWING PIPES LARGER THAN 12". THE CROWNS OF INFLOWING PIPES SHALL NEVER BE SET LOWER THAN THE CROWN OF THE OUTFLOWING PIPE.
17. STANDARD MANHOLES AND STANDARD INSIDE DROP MANHOLES SHALL BE BID AS STANDARD MANHOLES FOR THE TYPE AND DIAMETER INDICATED. OUTSIDE DROP MANHOLES SHALL BE BID AS STANDARD OUTSIDE DROP MANHOLES FOR THE TYPE AND DIAMETER INDICATED. ALL MANHOLE DIAMETERS WILL BE 4' UNLESS INDICATED OTHERWISE.
18. A BRICK MASONRY COLLAR SHALL BE INSTALLED BETWEEN THE CAST IRON FRAME AND THE CONCENTRIC CONE. THE COLLAR WILL HAVE 8" WALLS AND A VERTICAL HEIGHT OF 6" MINIMUM AND 18" MAXIMUM. A 1" COAT OF MORTAR WILL BE PLASTERED ON THE OUTSIDE OF THE COLLAR. THE USE OF PRE-CAST CONCRETE SPACERS FOR MANHOLE TOP ADJUSTMENT IS ALSO ALLOWED.

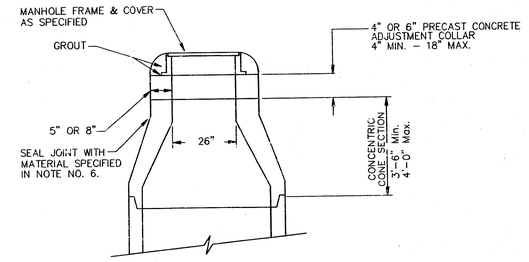

ALTERNATE CONSTRUCTION
IN UNPAVED AREAS

CITY OF WICHITA
STD. MANHOLE DETAILS
& SEWER APPURTENANCES DETAIL

BAUGHMAN COMPANY P.A.
ENGINEERING, SURVEYING, & PLANNING
316-262-7271 • 315 ELLIS • WICHITA, KANSAS 67211

PROJECT NUMBER	SHEET
468-82830	7 OF 11

DESIGN	DRAWN	APPROVED	DATE	SCALE
C.O.W.	Staff			NONE

THE TALLS VIEW

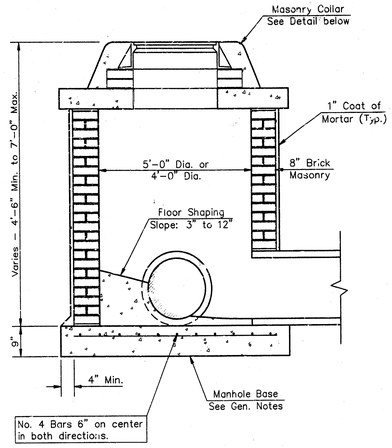

SHALLOW TYPE "A" MANHOLE

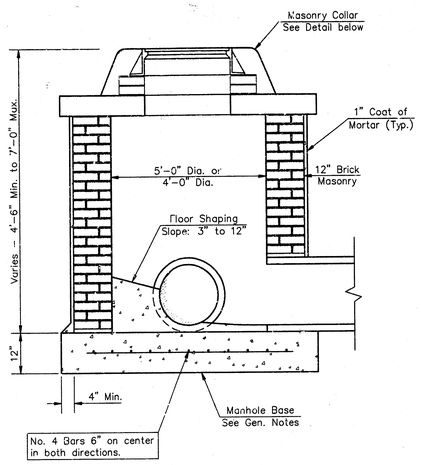

SHALLOW TYPE "B" MANHOLE

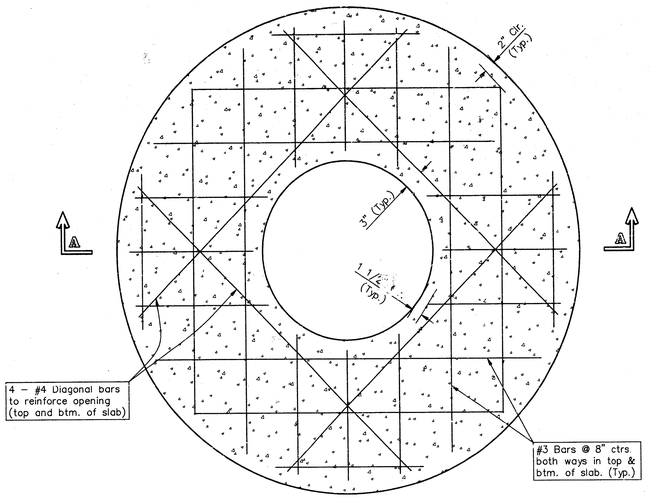

PLAN

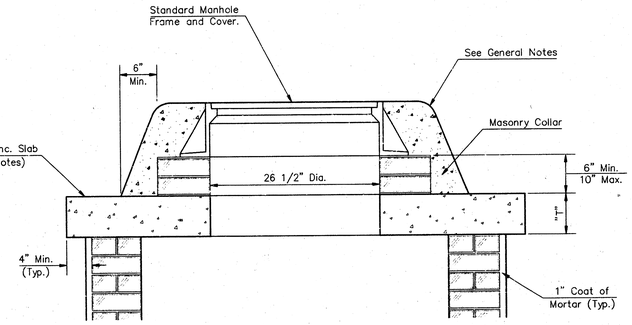

MASONRY COLLAR DETAIL

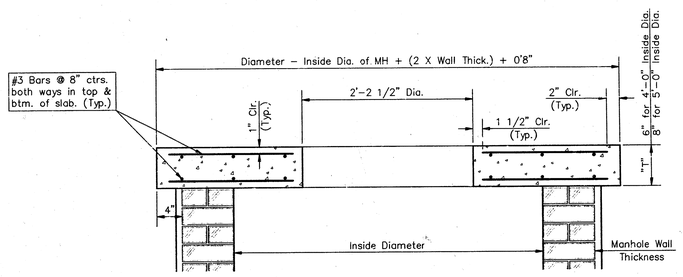

SECTION A-A

FLAT CONCRETE SLAB DETAILS

GENERAL NOTES

1. Mortar used in masonry construction shall contain 8 sacks of cement per cubic yard. Concrete used in manhole bases shall conform to the requirements of concrete for concrete pavement construction as specified in the city standard paving specifications using city concrete cement mix without air entraining admixture. Mortar shall be placed around the manhole ring as shown on the drawings when manholes are constructed in unpaved areas. Type "A" shallow manholes can be used on sewers when the manhole is not located within public street pavement. Manholes constructed where pipe sizes are smaller than 24" shall have an inside diameter of 4'. Manholes constructed where pipe sizes are 24" or larger shall have an inside diameter of 5'. Completed manhole shall be without leaks and water tight.

2. Reinforcing steel shall be installed in the manhole bases and shall consist of no. 4 bars placed on 6" centers in both directions. The manhole base reinforcement shall be placed 6" above the bottom of the manhole base. All costs for furnishing and installing reinforcing steel shall be included in the unit price bid for the manhole.

3. The floors of all manholes shall be shaped with flow channels such that the manholes will be self cleaning and free of areas where solids could be deposited as sewage flows through the manhole from all inlet pipes to the outlet pipe. Flow channels shall be formed to match the bottom halves of the inflowing pipes and the outflowing pipe as shown by the drawings. Manhole floors shall have slopes of 3 inches per foot in the areas outside of the flow channels sloped toward the flow channels. Pipes laid through manholes shall have the top half removed to neat lines for the full inside diameter of the manhole. Manhole floors shall then be shaped around the bottom half of the pipe which forms the flow channel.

4. Pipes installed within the excavation made for the manhole shall be cradled with concrete to the limits of the manhole excavation. When clay pipe is used, the cradle shall extend to the first joint outside the manhole. The cradle shall be terminated at the clay pipe joint in a manner which will maintain the flexibility of the joint. Cost of cradle within manhole excavation or to clay pipe joints adjacent to manhole shall be included in the unit price bid for the manhole.

5. Manhole cover castings and manhole frame castings shall conform to the requirements as indicated in the standard specifications and as shown in the standard detail drawings.

6. The crowns of inflowing pipes shall never be set lower than the crown of the outflowing pipe.

7. Standard shallow manholes type "A" and "B" shall be paid for at the unit price bid per each for the type and diameter indicated. Standard special shallow manholes type "A" and "B" shall be paid for at the unit price bid per each for the type indicated. All standard shallow manhole diameters will be 4' unless indicated otherwise.

8. All brick used in manhole construction shall meet Grade SW of ASTM C652 or C62-87.

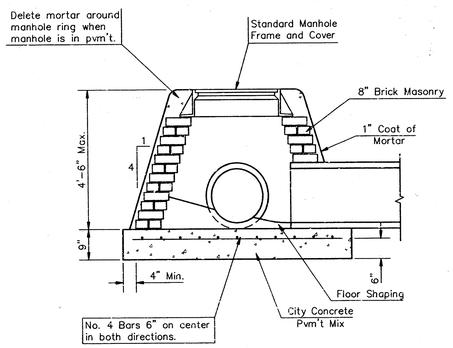

SPECIAL SHALLOW TYPE "A" MANHOLE

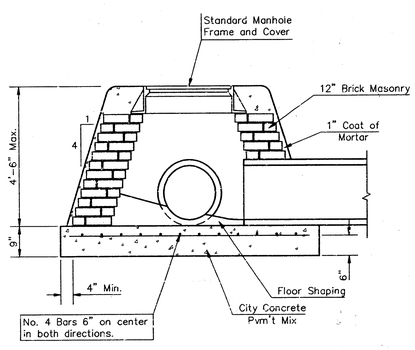

SPECIAL SHALLOW TYPE "B" MANHOLE

CITY OF WICHITA, KANSAS

Std. Manhole Detail

TYPE "A" AND TYPE "B"

BAUGHMAN COMPANY P.A.
ENGINEERING, SURVEYING, & PLANNING
316-262-1371 • 316 ELLIS • WICHITA, KANSAS 67211

PROJECT NUMBER					SHEET
468-82830					8 of 11
DESIGN	DRAWN	APPROVED	DATE	SCALE	
C.O.W.	Staff			NONE	

12 JAN 95 15:04 AM

MANHOLE FRAME AND COVER DETAIL

ADOPTED AS STANDARD DESIGN BY
CITY OF WICHITA, KANSAS

MANHOLE COVER
Weight = 180 Lbs.

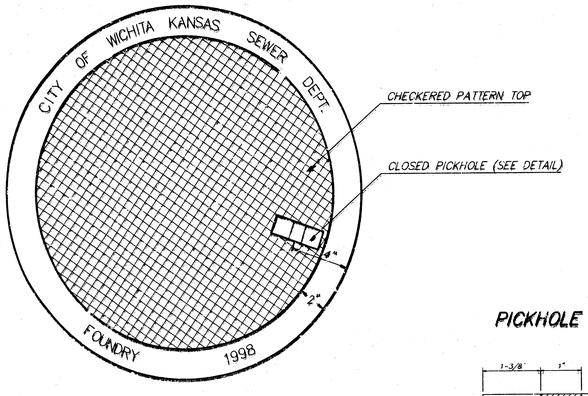

TOP VIEW

PICKHOLE DETAIL

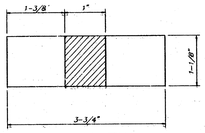

TOP VIEW

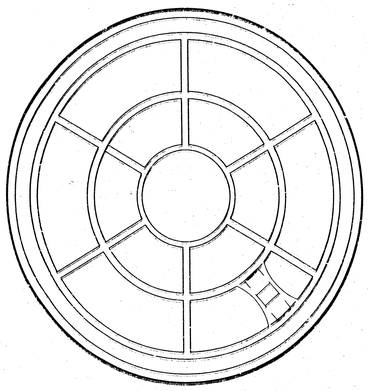

BOTTOM VIEW

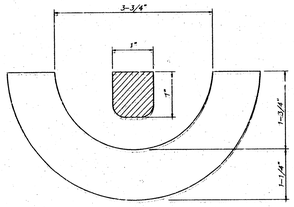

SECTION VIEW

MANHOLE FRAME
Weight = 145 Lbs.

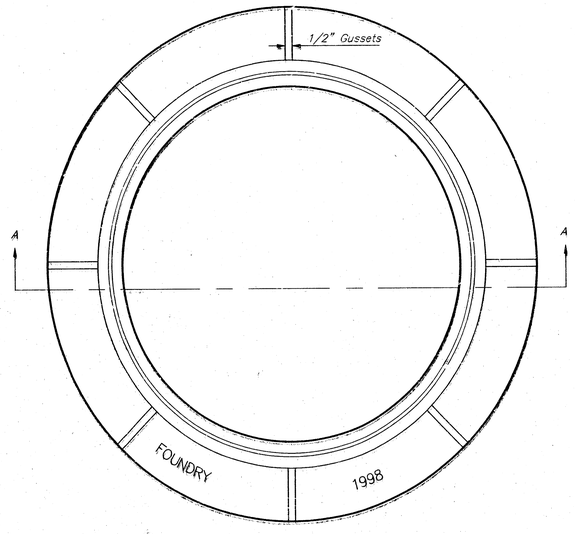

TOP VIEW

GENERAL NOTES

MANHOLE CASTINGS SHALL BE MANUFACTURED USING GOOD QUALITY GRAY IRON CONFORMING TO CLASS 30 OF A.S.T.M. DESIGNATION A-48. DIMENSIONS AND WEIGHTS SHOWN ON THE DETAILED DRAWINGS SHALL BE CONSIDERED AS MINIMUM REQUIREMENTS AND ANY DEVIATIONS FROM THE DIMENSIONS SHOWN MUST BE SPECIFICALLY APPROVED. THE FINISHED CASTINGS SHALL BE OF UNIFORM QUALITY, FREE FROM BLOWHOLES, POROSITY, HARD SPOTS, SHRINKAGE DISTORTIONS OR OTHER DEFECTS.

MANHOLE CASTINGS SHALL BE COATED WITH AN ASPHALT PAINT RESULTING IN A SMOOTH, TOUGH AND TENACIOUS COATING WHICH IS NOT BRITTLE OR TACKY.

MANHOLE CASTINGS SHALL BE MANUFACTURED SUCH THAT A COVER MANUFACTURED BY ANY ONE FOUNDARY WILL FIT INTERCHANGEABLY INTO A FRAME MANUFACTURED BY ANOTHER FOUNDRY AND STILL MEET ALLOWABLE CLEARANCES AND NON-ROCKING REQUIREMENTS. THIS WILL REQUIRE MANUFACTURING OF THE MATCHING FACES ON THE COVER AND THE FRAME TO CLOSE TOLERANCES.

THE OUTSIDE CIRCUMFERENCE OF THE VERTICAL FACE OF THE COVER AND THE INSIDE CIRCUMFERENCE OF THE VERTICAL FACE IN THE FRAME RECESS SHALL BE MANUFACTURED TO TOLERANCES SUCH THAT THE CLEARANCE BETWEEN THE COVER AND FRAME WILL NOT EXCEED 1/8" AT ANY POINT AROUND THE CIRCUMFERENCE OF THE COVER. THE SEATING SURFACES BETWEEN THE COVER AND FRAME SHALL BE MACHINED SUCH AS THESE SURFACES SHALL MAKE FULL CONTACT FOR THEIR FULL CIRCUMFERENCE TO PRECLUDE THE COVER FROM ROCKING IN THE FRAME.

THE MANHOLE FRAME AND COVER SHALL BE MARKED WITH LETTERING INDICATING THE NAME OF THE MANUFACTURER AND THE YEAR WHEN THE COVER OR FRAME WAS CAST. THE COVER SHALL BE FURTHER IDENTIFIED WITH REGARDS TO OWNERSHIP USING LETTERS AT LEAST 1 INCH IN HEIGHT. THIS IDENTIFICATION SHALL BE "CITY OF WICHITA SEWER DEPARTMENT". THE WORD DEPARTMENT MAY BE ABBREVIATED. THE TEXTURE OF THE TOP SURFACE OF THE COVER SHALL BE MANUFACTURED IN A CHECKERED PATTERN DESIGN AS INDICATED ON THE DRAWINGS. SMOOTH BLOCKOUTS SHALL BE UTILIZED TO HIGHLIGHT THE LETTERING ON THE COVER SURFACE. THE TOTAL AREA OF SMOOTH SURFACE BLOCKOUT SHALL NOT EXCEED THE AREA AS INDICATED ON THE DRAWING. POSITIONING OF SMOOTH BLOCKOUTS AND LETTERING MAY VARY FROM THAT SHOWN ON THE DETAILED DRAWING.

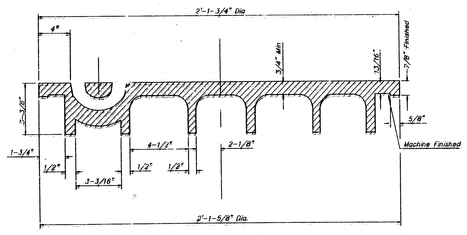

SECTION VIEW

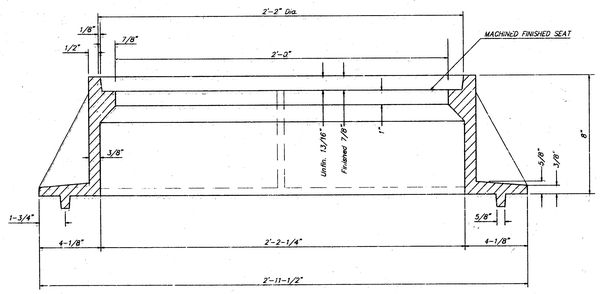

SECTION A-A

MANHOLE FRAME AND COVER DETAIL
ADOPTED AS STANDARD DESIGN BY
CITY OF WICHITA, KANSAS

BAUGHMAN COMPANY P. A.
ENGINEERING, SURVEYING, & PLANNING
316-262-7271 • 315 FILLIS • WICHITA, KANSAS 67211

PROJECT NUMBER	SHEET
468-82830	9 OF 11

DESIGN	DRAWN	APPROVED	DATE	SCALE
C.O.W.	Staff		4/98	None

DETAILS\MANHC

VERTICAL RISER DETAILS
ADOPTED AS STANDARD DESIGN BY CITY OF WICHITA, KANSAS OCTOBER 1992

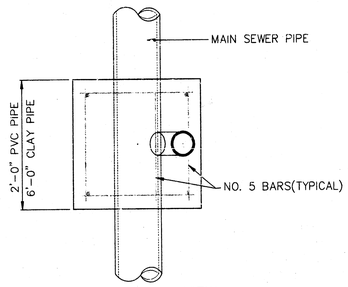

TYPICAL PLAN VIEW

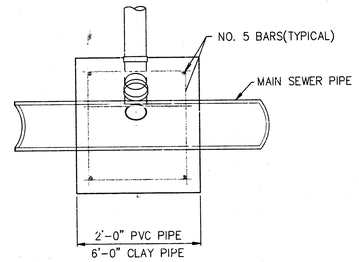

TYPICAL SECTION X-X

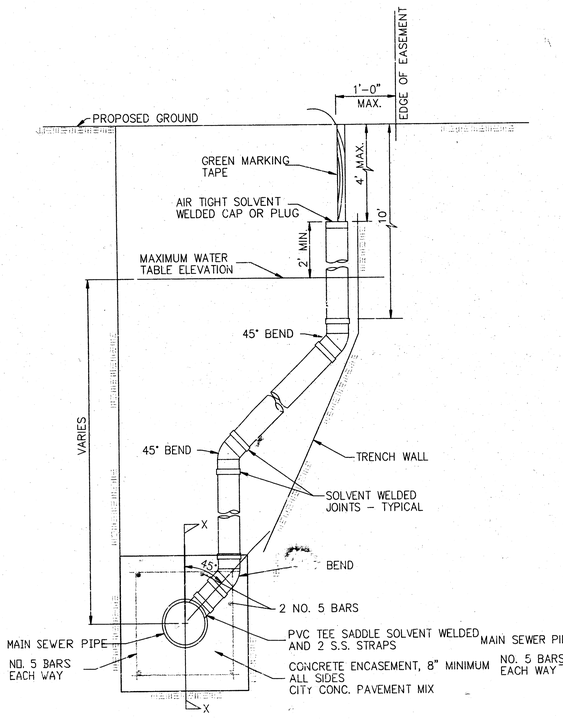

METHOD "A"

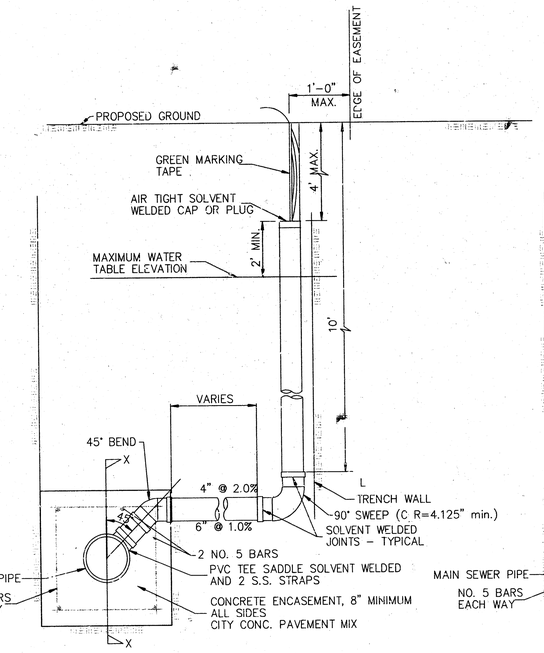

METHOD "B"

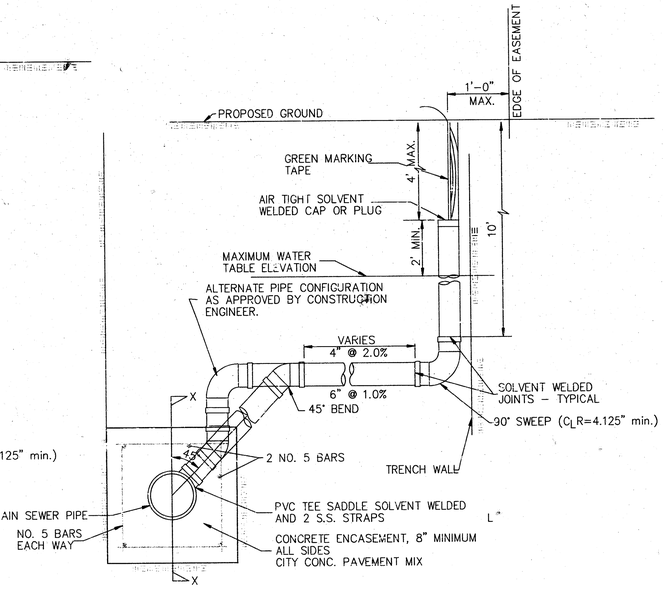

METHOD "C"

NOTE: RISER PIPE REQUIREMENTS AT MANHOLE STUBS SHALL BE SIMILAR TO THOSE SHOWN ABOVE.

GENERAL NOTES

1. RISERS. Risers shall be installed to serve all lots or tracts where the sanitary sewer main is below the water table. Risers shall also be installed to serve all lots and tracts where the sanitary sewer main depth is greater than 12 feet below the proposed ground elevation. Installation of risers because of field conditions shall be as approved by the Construction Engineer. The location of the risers to serve developed property shall be approved by the property owner and the Construction Engineer.

2. PIPE STUBS. Pipe stubs shall be installed in manholes where locations of manholes will provide satisfactory service connection as determined by the Construction Engineer. The vertical distance between the flowline of the manhole pipe stub and the flowline of the sanitary sewer main out of the manhole shall not exceed 2 feet. Risers shall be utilized at manhole pipe stubs as indicated in Note 1. Manhole pipe stubs shall be set such that the top of the stub is not lower than the top of the sanitary sewer main.

3. SIZING. Pipe stubs and risers shall be sized according to the plans and riser table where risers are indicated by the plans. Where risers or pipe stubs are required because of field conditions, the risers and stubs shall be six-inch diameter for commercial or industrial properties and 4" or 6" diameter for residential properties, based on lot size and sanitary sewer main depth. Sizing of risers and stubs shall be approved by the Construction Engineer prior to installation.

4. RISER OR STUB MATERIAL. Risers and stubs shall be constructed of Schedule 40 PVC Pipe, meeting the requirements of the latest revision of A.S.T.M. . All pipe joints shall be solvent welded.

5. REINFORCED CONCRETE ENCASEMENT. Riser connections to clay pipe sanitary sewers shall be reinforced concrete encased both ways from the riser centerline. The reinforced concrete encasement shall extend three feet from the riser centerline or stop at the first sanitary sewer pipe joint within three feet of the riser centerline. Riser connections to PVC Sanitary Sewer mains shall be reinforced concrete encased one foot each way from the riser centerline. The concrete encasement shall be reinforced using reinforcing steel as shown in the appropriate drawing. The concrete shall conform to the City Standard Specifications for concrete pavement.

6. BEDDING. Bedding around the sanitary sewer riser shall be compacted Pipe Bedding Type 1 or 2. The bedding shall be placed and compacted from the depth of the sanitary sewer main to the top of the sanitary sewer riser pipe. Compacted Pipe Bedding Type 1 or 2 shall be required for all risers whether constructed in vertical wall or sloped wall trenches. Bedding material and construction practices shall be approved by the Construction Engineer prior to installation.

7. SUPPORT OF RISERS. Sanitary sewer riser pipe shall be supported during trench backfill. The riser pipe shall be held in a vertical position at all times until trench backfill and compaction has been completed. Contractor's methods for supporting and backfilling the riser pipe shall be approved by the Construction Engineer.

8. PLUGGING. The ends of the riser pipes and manhole stubs shall be plugged using an airtight solvent welded cap or plug. Cap or plug fittings shall be approved by the Construction Engineer prior to installation. Caps or plugs which do not provide an airtight seal will not be accepted.

9. TOP OF THE RISER PIPE. The top elevation of the sanitary sewer riser pipe shall be built per plan elevations, unless otherwise directed by the Construction Engineer. Where riser elevations are not shown on the plans, the top of the risers shall be set at an elevation four feet below the proposed ground surface. If ground water is encountered, the top of the riser pipe shall be set at an elevation two feet (min.) above the maximum water table elevation, regardless of the riser elevation shown on the plans.

10. MARKING. Locations of the ends of the sanitary sewer riser pipe shall be marked by fastening green colored plastic tape to the end of the riser. The tape shall be supported by a length of wooden 2 x 4, extending from the top of the riser pipe to the proposed ground surface. The green tape shall be visible and extend one foot above the proposed ground surface. The green tape shall be 4 mil Polyethylene film with a minimum width of three inches, specifically manufactured for the purpose of identification of underground sewers.

11. LOCATION MEASURES. The project inspector shall record and document the location of all risers constructed as measured from the nearest manhole, indicating the direction from the manhole, the direction and distance from the main, riser size, and elevation of the top of the riser.

12. RISER LOCATION. The riser shall be located per plan if shown. If not shown on the plan, the riser shall be located at the center of the lot, within one foot of the property side of the easement for the lot being served. All riser locations shall be approved by the Construction Engineer prior to installation.

13. PAYMENT. "Sanitary sewer risers" shall be paid for at the contract unit price per each, which price shall be full compensation for all pipe, fittings, marking tape, length of wooden 2 x 4, reinforced concrete encasement, support during backfill, backfill, labor, site restoration, and any other items necessary to complete the work.

"Manhole stubs" shall be paid for at the contract unit price per each, which shall be full compensation for all labor, material, and incidentals necessary to complete the work including all pipe, fittings, reinforced concrete encasement, and all other items as required and listed for "Sanitary Sewer Risers".

City of Wichita Standard
Riser Details

BAUGHMAN COMPANY P. A.
ENGINEERING, SURVEYING, & PLANNING
316-262-7271 • 315 ELLIS • WICHITA, KANSAS 67211

PROJECT NUMBER					SHEET
468-82830					10 OF 11
DESIGN	DRAWN	APPROVED	DATE	SCALE	

REECE FARMS ESTATES

AN ADDITION TO WICHITA, SEDGWICK COUNTY, KANSAS

0 100 200

BENCHMARK:
TOP OF 1" IRON, 12" DEEP, E1/4 COR., SEC. 27, TWP. 27-S, R-2-W.
ELEV. = 1396.53 M.S.L.
(209.13 CITY DATUM)

(D) = DESCRIBED
(M) = MEASURED

○ = 1/2" IRON (FOUND)
◉ = #4 REBAR W/ "TTLS" CAP (FOUND)
Ø = 3/4" IRON (FOUND)
⊠ = 1" IRON (FOUND)
● = #4 REBAR W/ "BAUGHMAN" CAP (SET)
◎ = 3/4" IRON IN THIMBLE (FOUND)

MINIMUM BUILDING PAD ELEVATION FOR LOWEST OPENING TO THE STRUCTURES

LOT	BLOCK	ELEVATION	
		CITY DATUM	MSL
1-22	B	228.6	1416
19-28	A	223.6	1411
1,3,4,5	A	222.6	1410

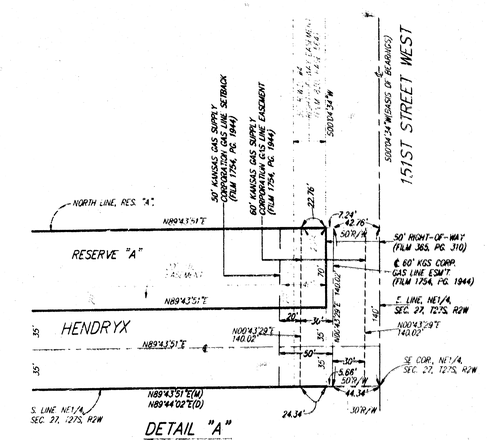

State of Kansas)
County of Sedgwick) SS

We, Baughman Company, P.A., Surveyors in aforesaid county and state do hereby certify that, under the supervision of the undersigned, we have surveyed and platted "REECE FARMS ESTATES", an Addition to Wichita, Sedgwick County, Kansas and that the accompanying plat is a true and correct exhibit of the property surveyed, described as follows: Beginning at a point on the west line of the NE1/4 of Sec. 27, Twp. 27-S, R-2-W of the 6th P.M., Sedgwick County, Kansas, which is at an assumed bearing of S00°01'10"W, 1,321.29 feet from the NW Corner of said NE1/4; thence S00°01'10"W along the west line of said NE1/4, 1,305.99 feet, more or less, to the SW Corner of said NE1/4; thence N89°44'02"E along the south line of said NE1/4, 2637.68 feet, more or less, to the SE Corner of said NE1/4; thence N00°04'34"E along the east line of said NE1/4, 140 feet; thence S89°44'02"W parallel with the south line of said NE1/4, 414.91 feet; thence N00°04'34"E parallel with the east line of said NE1/4, 271.26 feet; thence S88°48'34"W, 753.71 feet; thence N00°04'34"E, 262.42 feet, more or less, to the most southerly corner of "MILES WEST WIND LAKES ESTATES", Sedgwick County, Kansas; thence N57°06'30"W along the southwesterly line of said "MILES WEST WIND LAKES ESTATES", 253.46 feet; thence S90°W parallel with the north line of said NE1/4, 1250.63 feet, more or less, to the point of beginning.

Existing public easements and dedications being vacated by virtue of K.S.A. 12 - 514(a).

Baughman Company, P.A.

Michael G. Carey 3-18-98
Michael G. Carey, Surveyor

Know all men by these presents that we, the undersigned, have caused the land described in the Surveyors certificate to be platted into Lots, Blocks, Streets and a Reserve to be known as "REECE FARMS ESTATES", an Addition to Wichita, Sedgwick County, Kansas. The utility easements are hereby granted as indicated for the construction and maintenance of all public utilities. The drainage easements are hereby granted as indicated for drainage purposes. The drainage and utility easements are hereby granted as indicated for drainage purposes and for the construction and maintenance of all public utilities. The emergency access easement is hereby granted as indicated for emergency access purposes and no fences or other obstructions shall be constructed or placed on or within this easement. The streets are hereby dedicated to and for the use of the public. Reserve "A" is hereby reserved for drainage purposes, open space, berms, landscaping, sidewalks, and utilities as confined to easements. Reserve "A" shall be owned and maintained by the homeowners association for the addition. McCormick Avenue contingent street dedication shall become effective in the event that the appropriate governing body determines the need for the right-of-way for any street related purposes. This contingent street dedication shall be a coverage running with the land and shall be binding on all heirs and subsequent owners of all parts of said property covered by said dedication. All abutters rights of access to or from 151st Street West over and across the east line of Reserve "A" are hereby granted to the appropriate governing body.

Triple J Development, L.L.C.

Jay W. Russell, Manager

State of Kansas)
Sedgwick County) SS

The foregoing instrument acknowledged before me this 17th day of MARCH, 1998, by Jay W. Russell, Manager of Triple J Development, L.L.C., on behalf of the company.

Judith M. Terhune, Notary Public

My App't Exp. 11-7-2001

JUDITH M TERHUNE
Notary Public - State of Kansas
My Appt. Exp. 11-7-2001

We, the undersigned, holders of a mortgage on the above described property, do hereby consent to this plat of "REECE FARMS ESTATES", an Addition to Wichita, Sedgwick County, Kansas.

State Bank of Colwich

James D. Ashcraft VP

State of Kansas)
Sedgwick County) SS

The foregoing instrument acknowledged before me, this 24th day of MARCH, 1998, by JAMES D. ASHCRAFT, Vice-Pres. of the State Bank of Colwich, on behalf of the bank.

Judith M. Terhune, Notary Public

My App't Exp. 11-7-2001

JUDITH M TERHUNE
Notary Public - State of Kansas
My Appt. Exp. 11-7-2001

This plat of "REECE FARMS ESTATES", an Addition to Wichita, Sedgwick County, Kansas, has been submitted to and approved by the Wichita-Sedgwick County Metropolitan Area Planning Commission, Wichita, Kansas.

Dated this ____ day of _____, 199__.

Wichita-Sedgwick County Metropolitan Area Planning Commission.

_____, Chairman
John C. Frye

_____, Secretary
Marvin S. Krout

This plat approved and all dedications shown hereon accepted by the City Council of the City of Wichita, Kansas, this ____ day of _____, 199__.

_____, Mayor
Bob Knight

_____, City Clerk
Pat Burnett

Entered on transfer record this ____ day of _____, 199__.

_____, County Clerk
James Alford

State of Kansas)
Sedgwick County) SS

This is to certify that this plat has been filed for record in the office of the Register of Deeds, this ____ day of _____, 199__, at ____ o'clock ____ M. and is duly recorded.

_____, Register of Deeds
Larry Consolver

_____, Deputy
Michael D. Hurtt

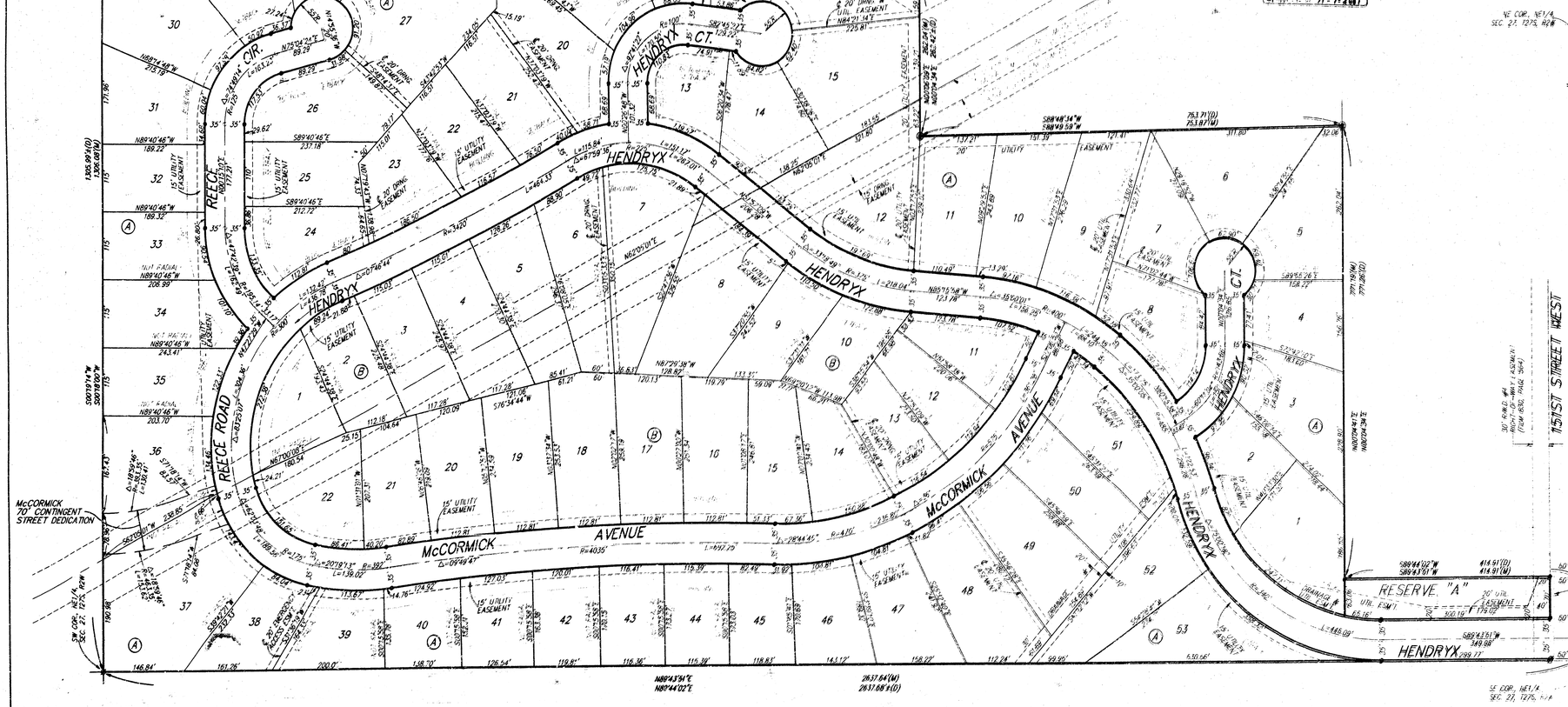

SEE DETAIL "A"

11/11

BAUGHMAN COMPANY, P.A.
10-05-00-03
[illegible] WICHITA, KANSAS 67211