CONSTRUCTION PLANS FOR

LATERAL 28, MAIN 12

OF THE

SOUTHWEST INTERCEPTOR SEWER

IN

THE CITY OF WICHITA,

SEDGWICK COUNTY, KANSAS

MICHAEL E. LINDEBAK, P.E.-CITY ENGINEER

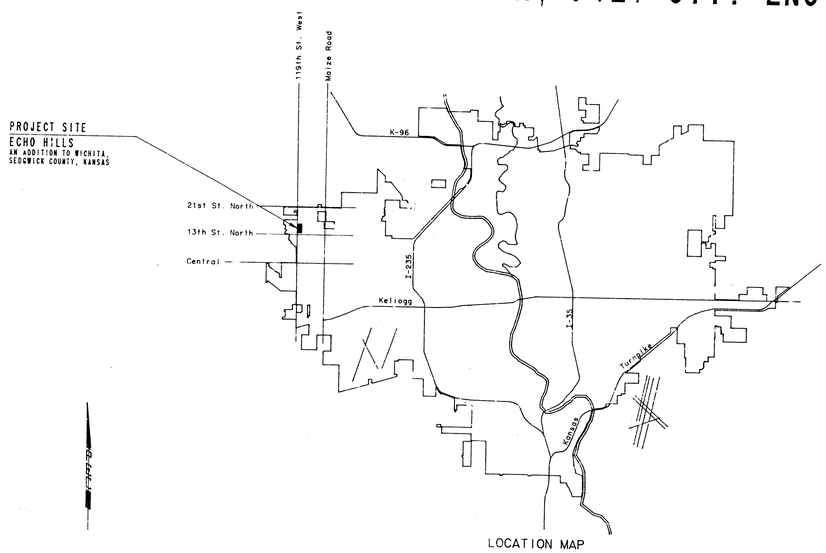

LOCATION MAP

INDEX OF SHEETS

SHEET NO. 1	TITLE SHEET
SHEET NO. 2	KEY MAP / EASEMENT GRADING PLAN
SHEET NO. 3	PLT
SHEET NO. 4-5	PLAN/PROFILE
SHEET NO. 6	TYPE "P" MANHOLE DETAILS
SHEET NO. 7	TYPE "S" MANHOLE DETAILS
SHEET NO. 8	TYPE "9" MANHOLE DETAILS
SHEET NO. 9	FRAME & COVER DETAILS

INDEX CODE 740738

CITY OF WICHITA PROJECT NO. 468-76-245-82105-000-000-001

JUNE, 1991

PLANS PREPARED BY

PROFESSIONAL ENGINEERING CONSULTANTS, P.A.

ENGINEERS

WICHITA, KANSAS

DANIEL LYNN MOORE LICENSED 9055 KANSAS PROFESSIONAL ENGINEER

BUILT PER PLAN RDL 10-91

DRAWING NAME: 34-91226-/.FH.SS TITLE
LOCATION: SFH10.04 DWG.#266
CENTER COORDINATES:
ROTATION ANGLE:
DATE LAST WORKED ON: JUN.25, 1991
SPECIAL INSTRUCTIONS:

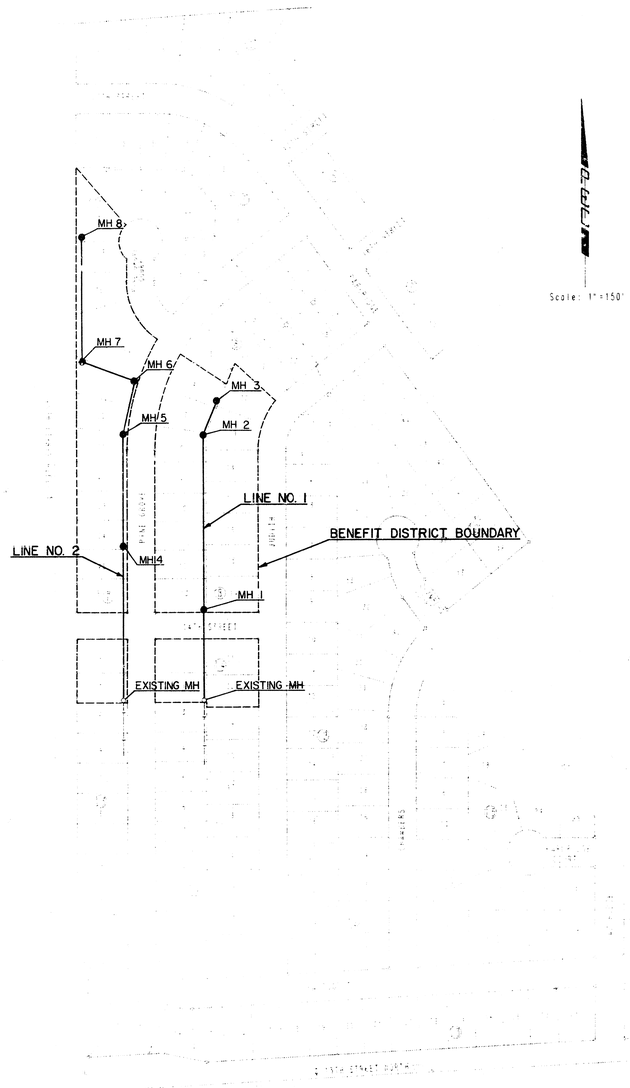

KEY MAP

Scale: 1" = 150'

GENERAL NOTES

1. ALL CONSTRUCTION AND MATERIALS TO COMPLY WITH CITY OF WICHITA SPECIFICATIONS AND STANDARDS.
2. ALL ELEVATIONS SHOWN ARE CITY OF WICHITA DATUM (USGS - 1187.40 = CITY DATUM).
3. THE CONTRACTOR SHALL LIMIT THE EXTENT OF TRENCH TO REMAIN OPEN OVERNIGHT AND WEEKENDS TO LESS THAN 50 FEET.
4. AT LEAST 48 HOURS PRIOR TO BEGINNING EXCAVATION (EXCLUDING WEEKENDS AND HOLIDAYS), THE CONTRACTOR SHALL CONTACT THE KANSAS ONE-CALL SYSTEM, A UTILITY LOCATION SERVICE, AT (316) 687 2470 TO REQUEST THE FOLLOWING UTILITY COMPANIES TO LOCATE ANY EXISTING LINES WITHIN THE PROJECT AREA: KPL/GAS SERVICE, ARKLA GAS CO., K.G. & E., THE WICHITA WATER DEPARTMENT, MULTIMEDIA CABLEVISION, AND SOUTHWESTERN BELL TELEPHONE.
5. UNDERGROUND UTILITY SERVICE LINES AND OVERHEAD UTILITY POLE LINES ARE TO BE ADJUSTED AS NECESSARY BY OTHERS PRIOR TO CONSTRUCTION UNLESS THE PLANS SPECIFICALLY CALL FOR THEIR ADJUSTMENT BY THE CONTRACTOR OR UNLESS THE PLANS SPECIFICALLY IDENTIFY A UTILITY TO BE ADJUSTED BY ITS OWNER DURING CONSTRUCTION. EXISTING UTILITIES AND THEIR LOCATIONS, AS SHOWN ON THE PLANS, REPRESENT THE BEST INFORMATION OBTAINABLE FOR THE DESIGN. THE CONTRACTOR WILL BE REQUIRED TO WORK AROUND EXISTING UTILITIES WITHIN THE RIGHT-OF-WAY WHICH DO NOT CONFLICT WITH PROPOSED CONSTRUCTION.
6. THE CONTRACTOR SHALL BE RESPONSIBLE FOR PRESERVING PROPERTY IRONS. THE CONTRACTOR WILL BE REQUIRED TO RE-ESTABLISH ANY PROPERTY IRONS WHICH ARE DAMAGED OR DESTROYED BY HIS CONSTRUCTION OPERATIONS. SUCH IRONS SHALL BE RE-ESTABLISHED BY A LICENSED LAND SURVEYOR IN ACCORDANCE WITH STATE LAWS. ALL COSTS FOR THIS WORK SHALL BE SUBSIDIARY TO THE OTHER ITEMS OF WORK.
7. CONTRACTOR SHALL PROVIDE POSITIVE DRAINAGE AWAY FROM ALL MANHOLE COVERS.
8. UNLESS OTHERWISE SPECIFIED ON THE PLANS, MANHOLES MAY BE TYPE "P", "C", OR "D" MANHOLES. MANHOLES SHALL BE CONSTRUCTED IN ACCORDANCE WITH THE STANDARD SPECIFICATIONS AND THE STANDARD DETAIL DRAWINGS.
9. CONTRACTOR SHALL GRADE THE SANITARY SEWER ALIGNMENT TO THE PROFILE AND ELEVATIONS SHOWN ON THE EASEMENT GRADING PLAN. ALL COSTS FOR GRADING SHALL BE SUBSIDIARY TO THE PROJECT.
10. THE CONTRACTOR SHALL GIVE ALL PROPERTY OWNERS AND/OR TENANTS OF DEVELOPED PROPERTY ABUTTING THE CONSTRUCTION OF THIS PROJECT A MINIMUM OF TEN (10) DAYS ADVANCE NOTICE PRIOR TO START OF CONSTRUCTION.
11. ALL LAWN/TURF AREAS DISTURBED BY CONSTRUCTION OF THE PROPOSED IMPROVEMENTS SHALL BE RESTORED WITH THE SAME GRASS/SOD AS EXISTING. RESTORATION OF DISTURBED AREAS SHALL INCLUDE, BUT NOT BE LIMITED TO, TOP SOIL PREPARATION, SEEDING, MULCH, AND/OR RESEEDING. ALL SEEDING/SODDING WORK SHALL BE IN ACCORDANCE WITH THE CITY OF WICHITA STANDARD SPECIFICATIONS AND THE CITY OF WICHITA ADMINISTRATIVE REGULATION NO. AR78 WHICH GOVERNS CLEANUP AND RESTORATION OR REPLACEMENT FOLLOWING CONSTRUCTION. ALL COSTS FOR THIS WORK SHALL BE CONSIDERED SUBSIDIARY TO THE PROJECT.



Scale: 1" = 150'

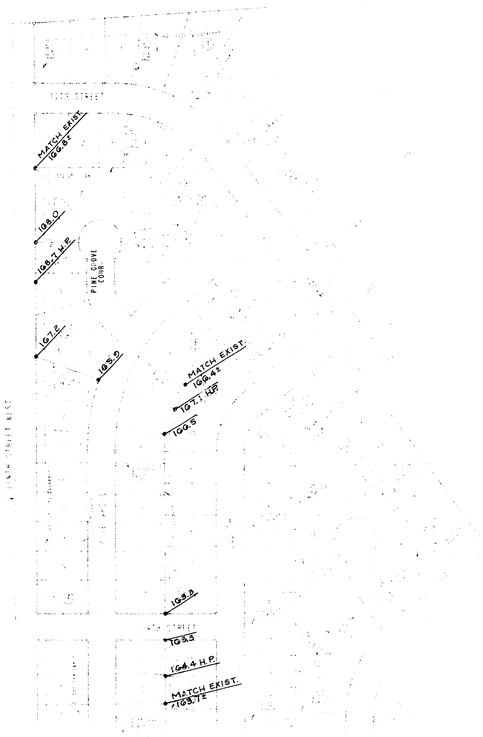

EASEMENT GRADING PLAN

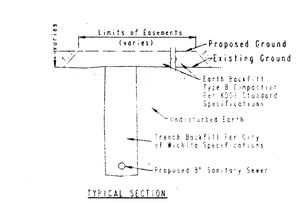

TYPICAL SECTION

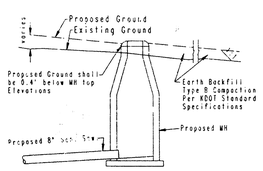

TYPICAL PROFILE

"FILL" SITUATIONS

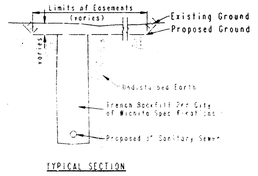

TYPICAL SECTION

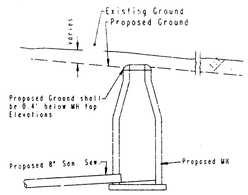

TYPICAL PROFILE

"CUT" SITUATIONS

EASEMENT GRADING DETAILS

= AREAS TO BE GRADED

= Locations where surface drainage will be directed along the side lot lines from the rear yard easements to the front of the lot. This grading will be "by others".

H.P. = HIGH POINT

DRAWING NAME: 34-91276-2.DWG KEY
PLOTTED: MAY 22, 1991 8:04 AM
CENTER COORDINATES ON: # 284
ROTATION ANGLE:
DATE LAST WORKED ON: MAY 22, 1991
CLEAR ALL INSTRUCTIONS

GABRIEL LYNN MOORE LICENSED 9055 KANSAS PROFESSIONAL ENGINEER

No.	Revision	By	Date

LATERAL 28, MAIN 12, OF THE SOUTHWEST INTERCEPTOR SEWER

KEY MAP / EASEMENT GRADING PLAN

MICHAEL E. LINDEBAK, P.E. - CITY ENGINEER
CITY OF WICHITA PROJECT NO. 468-76-245-82105-000-000-001

PROFESSIONAL ENGINEERING CONSULTANTS, P.A.
ENGINEERS
WICHITA, KANSAS

Designed by DLW, RFJ	Job No. 34-91276-2	Sht 2 of 3
Drawn by TDS, RFJ	Date JUNE, 1991	

ECHO HILLS

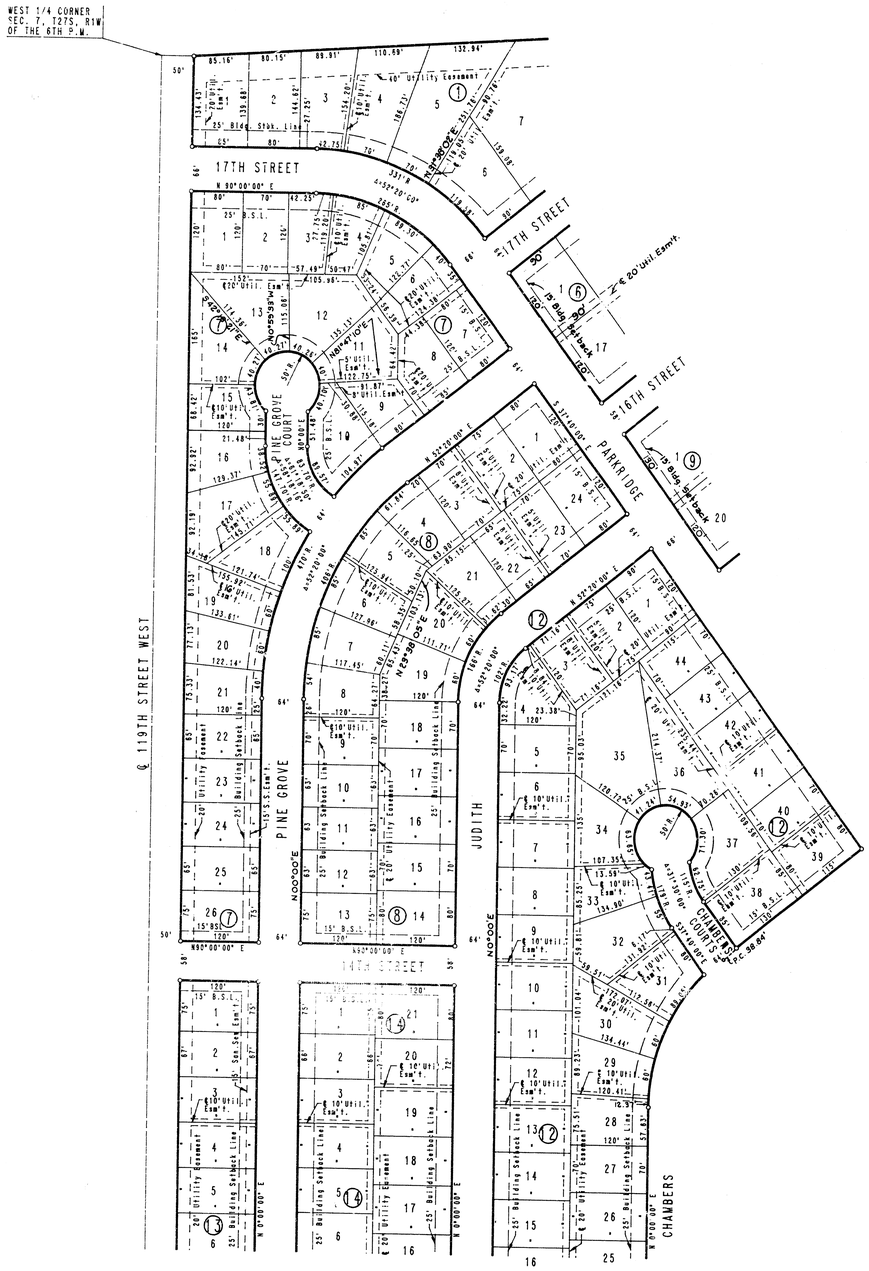

No	Revision	By	Date

LATERAL 28, MAIN 12, OF THE SOUTHWEST INTERCEPTOR SEWER

PLAT

MICHAEL E. LINDEBAK, P.E. - CITY ENGINEER
CITY OF WICHITA PROJECT NO. 468-76-245-82105-000-000-001

PROFESSIONAL ENGINEERING CONSULTANTS, P.A.
ENGINEERS
WICHITA, KANSAS

Designed by	Job No 34-91228-2	Sht. 3 of 9
Drawn by DEP	Date JUNE, 1991	

SCALE :

PLAN: HOR. & VERT. 40 0 40 80

PROFILE: HORIZ. SAME AS ABOVE

VERT.

Sta. 0+00.0
Existing conc. MH
Connect new 8"
PVC pipe to
existing 8" PVC
stub.

CAUTION!!
Proposed
8" Waterline

Sta. 1+94.5
Const. MH 1
Standard MH

Sta. 5+83.4
Const. MH 2
Standard MH

CAUTION!!
Buried elec. cable
KG&E

Sta. 6+64.6
Const. MH 3
Standard MH

NOTICE TO CONTRACTOR
PRIOR TO THE START OF SANITARY SEWER CONSTRUCTION, K.G.&E. WILL RELOCATE OR ABANDON IN PLACE THE EXISTING BURIED ELECTRIC CABLE WHICH CONFLICTS WITH THE CONSTRUCTION OF SANITARY SEWER LINE NO. 2. THE CONTRACTOR SHALL VERIFY WITH K.G.&E. THE DISPOSITION OF THE ELECTRIC CABLE PRIOR TO BEGINNING SANITARY SEWER CONSTRUCTION IN THE AFFECTED AREA. CONTACT MR. DON MORGAN AT K.G.&E., 261-6434.

All costs incurred in relocating or abandoning the electric cable shall be borne by KG&E.

Install 1-4" Stub
and plug

25'
32'
Not parallel
180°02'57"
5'
5'
5'
5'
Not parallel
22°06'05"
70°
60°
10'

CAUTION!!
Buried tele. cable
SWBell

Install 194.5 L.F.
8" PVC

Install 388.0 L.F.
8" Pipe

Install 81.2 L.F.
8" Pipe

Install 1-4" Stub
and plug

BM EH2 - CHISELED "□" IN CURB AT NORTH END DRIVEWAY RETURN, LOT 13 BLOCK 12 ECHO HILLS. (1456 JUDITH) ELEV. = 161.03

BM EH3 - CHISELED "□" IN CURB AT P.C. LOT 21, BLOCK 8 ECHO HILLS. (1609 JUDITH) ELEV. = 164.15

LINE NO. 1

Existing MH
Top Elev.=164.30

Proposed 8" Waterline
Top=158.00

MH 1
Top Elev.=163.5

MH 2
Top Elev.=166.0

MH 3
Top Elev.=167.3

Existing Ground

Proposed Ground

Proposed Ground
(by others)

Sta. 1+44 to Sta. 1+77
Place 33 L.F. Excavatable
Flowable fill from top
of pipe bedding
to Elev. 160.0.

℄ IN= 155.00
from 2-4" stubs (NW, ENE)

℄ OUT=152.00
℄ IN=152.70

℄=153.10

℄=158.49

℄=153.00

℄=154.30

℄=154.70

℄=155.10

℄=155.03

℄=155.36

194.5 L.F. 8" PVC
@0.40%

388.0 L.F. 8" Pipe
@0.40%

81.2 L.F.
8" Pipe
@0.40%

175 170 165 160 155 150 145 140 135

0+00 1+00 2+00 3+00 4+00 5+00 6+00

DANIEL LYNN DUKE
LICENSED
9055
KANSAS
PROFESSIONAL ENGINEER

PROFESSIONAL ENGINEERING CONSULTANTS, P.A.
ENGINEERS
WICHITA, KANSAS
Job No. 14 91226 2
Date June, 1991
Designed By DLM, RFJ
Drawn By TDS, RFJ
Sheet 4 of 9

LATERAL 28, MAIN 12, OF THE
SOUTHWEST INTERCEPTOR SEWER

LINE NO. 1

W. CHELL - WINDSOR, P.E. - CITY ENGINEER
APPROVED - PROJECT NO. 614-16-43 - STORM SEWER PLAT

DRAWING NAME: 14 91226 2 LINE 1.DGN
LOCATION: WICHITA, KANSAS
CENTER COORDINATES:
ROTATION ANGLE:
FILE LAST SAVED ON MAY 23, 1991
SPECIAL INSTRUCTIONS:

SCALE:

PLAN: EAST & LONG

PROFILE: HORIZ. SAME AS ABOVE

VER

Sta. 0+00.0
Existing conc. MH
Connect new 6"
PVC pipe to
existing 8" PVC
stub.

CAUTION !!
Proposed
8" Waterline

Sta. 3+41.6
Const. MH 4
Standard MH

Sta. 5+92.8
Const. MH 5
Standard MH

Sta. 7+14.9
Const. MH 6
Standard MH

Sta. 8+43.2
Const. MH 7
Standard MH

CAUTION !!
6" Steel gas
Arkla

Sta. 11+17.3
Const. MH 8
Standard MH

CAUTION!!
Buried tele. cable
S.W.Bell

34'

5.8

NOT PARALLEL

5'

179°58'24"

10'

10'

5'

12°14'50"

10°20'48"

15'

15'

5'

52°44'38"

10'

10'

45°

Install 341.6 L.F.
8" PVC

Install 251.2 L.F.
8" Pipe

Install 122.1 L.F.
8" Pipe

Install 128.3 L.F.
8" Pipe

Install 274.1 L.F.
8" Pipe

Install 1-4" Stub
and plug

BM EH1 - RAILROAD SPIKE IN WEST SIDE UTILITY POLE AT NORTHEAST CORNER 14TH STREET NORTH AND 113TH STREET WEST.
ELEV. = 168.66

LINE NO. 2

BM EH4 - CHISELED "□" IN CURB AT P.C. LOT 4, BLOCK 8 ECHO HILLS (1704 PINE GROVE)
ELEV. = 165.13

Existing MH
Top Elev.=163.40

Proposed 8" Waterline
Top=160.26

MH 4
Top Elev.=165.3

MH 5
Top Elev.=166.1

MH 6
Top Elev.=166.3

MH 7
Top Elev.=167.6

MH 8
Top Elev.=168.3

Existing Ground

Proposed Ground
(by others)

Sta. 1+51 to Sta. 1+84
Place 33 L.F. Excavatable
Flowable fill from top
of pipe bedding to
Elev. 161.5.

FE IN=158.78
from 1-4" stub(NE)

FE OUT=152.06
FE IN=152.06

FE=153.49

FE=153.99

FE=154.49

FE=154.70

FE=154.99

FE=155.49

FE=155.95

FE=156.38

FE OUT=156.44
FE IN=156.04

FE=156.98

FE OUT=157.16
FE IN=157.36

FE=157.58

FE=157.98

FE=158.38

FE=158.45

341.6 L.F. 8" PVC
@0.50%

251.2 L.F. 8" Pipe
@0.50%

122.1 L.F. 8" Pipe
@0.40%

128.3 L.F. 8" Pipe
@0.40%

274.1 L.F. 8" Pipe
@0.40%

0+00 1+00 2+00 3+00 4+00 5+00 6+00 7+00 8+00 9+00 10+00 11+00

175 170 165 160 155 150 145 140 135

DRAWING NAME: S4 01.76 2 LIN.DGN
LOCATION: SEWER04.DAT
CENTER COORDINATES:
ROTATION ANGLE:
DATE LAST WORKED ON: MAY 24, 1991
SPECIAL INSTRUCTIONS:

DANIEL LYNN MOORE
LICENSED
9055
KANSAS
PROFESSIONAL ENGINEER

LATERAL 'S' MAIN 12 OF THE
SOUTHWEST INTERCEPTOR SEWER

LINE NO. 2

PROFESSIONAL ENGINEERING CONSULTANTS, P.A.

Designed By: DLM, RFJ
Drawn By: TDS, RFJ

Sheet 5 of 9

SEWER APPURTENANCES DETAILS

ADOPTED AS STANDARD DESIGN BY CITY OF WICHITA

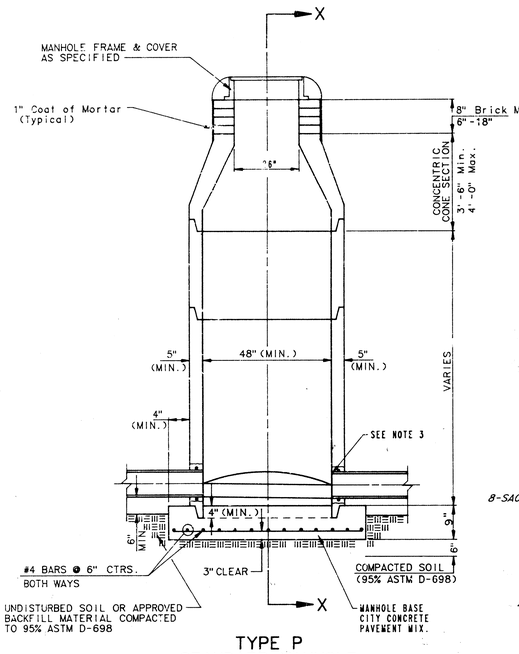

TYPE P
STANDARD MANHOLE

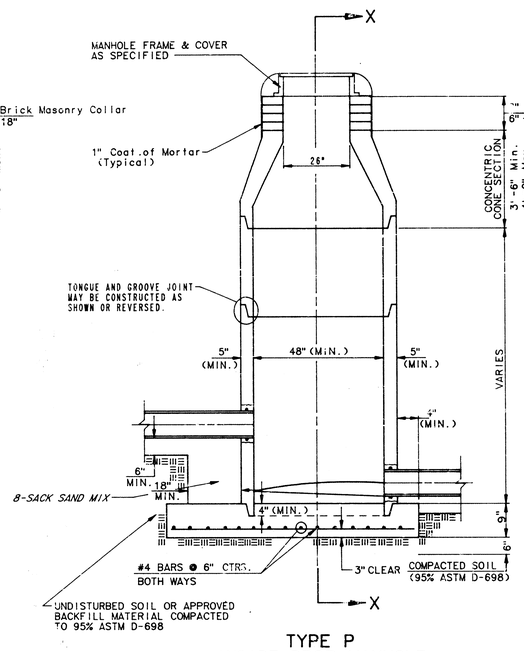

TYPE P
INSIDE DROP MANHOLE

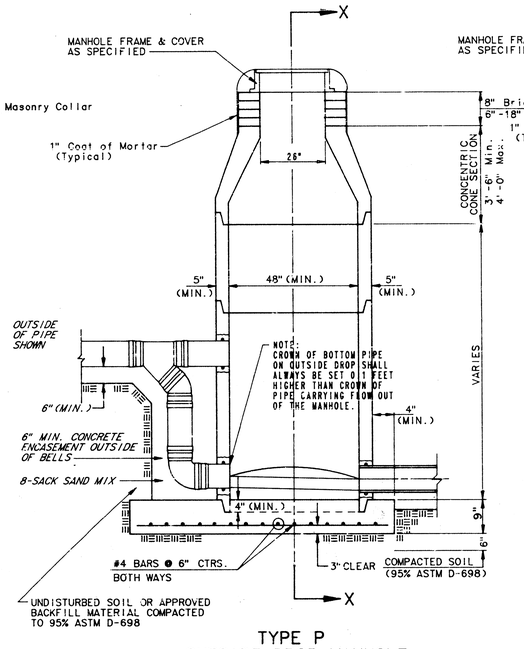

TYPE P
OUTSIDE DROP MANHOLE

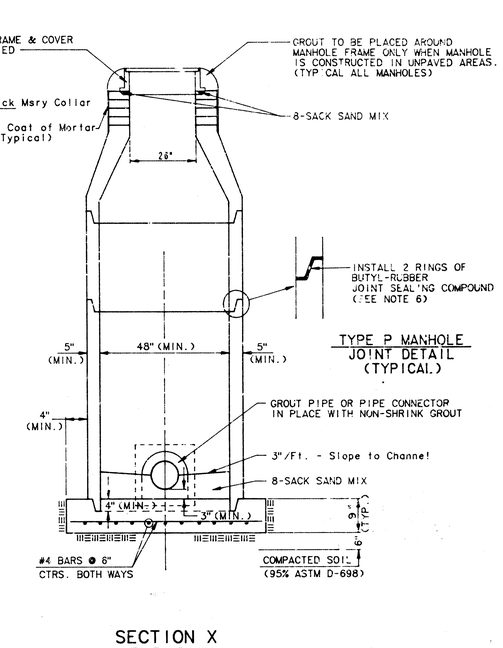

TYPE P MANHOLE
JOINT DETAIL
(TYPICAL)

SECTION X
(TYPICAL)

GENERAL NOTES

PRECAST MANHOLE NOTES

1. ALL PRECAST CONCRETE MANHOLE SECTIONS SHALL CONFORM TO THE LATEST REVISION OF A.S.T.M. C478 AS MODIFIED BY THE SPECIFICATIONS.
2. NON-SHRINK GROUT SHALL BE NON-METALLIC TYPE.
3. APPROVED FLEXIBLE WATERSTOP GASKETS SHALL BE INSTALLED TO JOIN THE SEWER TO THE MANHOLE WALL WHEN A.B.S. COMPOSITE PIPE OR P.V.C. PIPE IS USED. FOR OTHER TYPES OF PIPE THE SEWER SHALL BE GROUTED IN PLACE WITH NON-SHRINK GROUT. THE SEWER PIPE SHALL BE SUPPORTED WITH CONCRETE ENCASEMENT A MINIMUM OF 3 FEET FROM THE MANHOLE WALL AND TO THE FIRST JOINT FOR V.C.P. SUCH THAT THE JOINT REMAINS FLEXIBLE.
4. ALL INSIDE SURFACES OF THE CONCRETE MANHOLE WHICH WOULD BE EXPOSED TO SEWER GAS SHALL BE COATED WITH 2 COATS TNEMEC SERIES 66 HI-BUILD EPOXOLINE, DRY THICKNESS OF 8 MILS (MIN.)
5. EXTERIOR MANHOLE WALLS SHALL BE COATED WITH 1 COAT MOBILARMA 633 BITUMINUS COATING.
6. JOINT SEALING COMPOUND SHALL BE KENT SEAL NO. 2 OR APPROVED EQUAL.
7. PRECAST MANHOLES SHALL BE SET AT LEAST 4 INCHES INTO THE MANHOLE BASE.
8. TOP OF MANHOLE FLOOR SLAB SHALL BE AT LEAST 3 INCHES BELOW THE FLOW LINE OF THE OUTLET PIPE TO INSURE SUFFICIENT MINIMUM THICKNESS OF SHAPED INVERT.
9. LIFTING HOLES SHALL BE FILLED WITH NON-SHRINK GROUT AND THE INTERIOR SURFACE COATED AS SPECIFIED.
10. MORTAR USED IN MASONRY CONSTRUCTION SHALL CONTAIN 8 SACKS OF CEMENT PER CUBIC YARD. CONCRETE USED IN MANHOLE BASES SHALL CONFORM TO THE REQUIREMENTS OF CONCRETE FOR CONCRETE PAVEMENT CONSTRUCTION AS SPECIFIED IN THE CITY STANDARD PAVING SPECIFICATIONS USING CITY CONCRETE PAVEMENT MIX WITHOUT AIR ENTRAINING ADMIXTURE. MORTAR SHALL BE PLACED AROUND THE MANHOLE RING AS SHOWN ON THE DRAWINGS WHEN MANHOLES ARE CONSTRUCTED IN UNPAVED AREAS. MANHOLES CONSTRUCTED WHERE PIPE SIZES ARE SMALLER THAN 24" SHALL HAVE AN INSIDE DIAMETER OF 4'. MANHOLES CONSTRUCTED WHERE PIPE SIZES ARE 24" OR LARGER SHALL HAVE AN INSIDE DIAMETER OF 5'. COMPLETED MANHOLE SHALL BE WITHOUT LEAKS AND WATER TIGHT.
11. REINFORCING STEEL SHALL BE INSTALLED IN THE MANHOLE BASES AND SHALL CONSIST OF NO. 4 BARS PLACED ON 6" CENTERS IN BOTH DIRECTIONS. THE MANHOLE BASE REINFORCEMENT SHALL BE PLACED AT LEAST 3" ABOVE THE BOTTOM OF THE MANHOLE BASE. ALL COSTS FOR FURNISHING AND INSTALLING REINFORCING STEEL SHALL BE INCLUDED IN THE UNIT PRICE BID FOR THE MANHOLE.
12. OPENINGS SHALL BE CUT INTO THE MANHOLE WALL WHEN OUTSIDE DROPS ARE CONSTRUCTED ON EXISTING MANHOLES. SUCH OPENINGS CUT INTO EXISTING MANHOLES SHALL BE AS SMALL AS PRACTICAL TO FACILITATE INSTALLING AND GROUTING THE NEW PIPE IN PLACE. WATERSTOP GASKETS SHALL BE USED WITH P.V.C. AND A.B.S. COMPOSITE PIPE. THE NEW PIPE SHALL BE GROUTED INTO THE OPENING USING AN APPROVED NONSHRINK GROUT FOR THE FULL MANHOLE WALL THICKNESS. THE EXTERIOR OF THE COMPLETED CONNECTION SHALL BE SEALED WITH AN APPROVED BITUMINOUS COATING SUCH THAT THE CONNECTION WILL BE WATER TIGHT. FLOOR OF MANHOLE SHALL BE MODIFIED TO FORM NEW FLOW CHANNEL FOR THE NEW CONNECTION AS INDICATED BY THE DRAWING. THIS WORK, INCLUDING MODIFICATION OF MANHOLE FLOOR, SHALL BE PAID FOR AT THE UNIT PRICE BID FOR OUTSIDE DROP STACK CONSTRUCTED ON EXISTING MANHOLE.
13. THE FLOORS OF ALL MANHOLES SHALL BE SHAPED WITH FLOW CHANNELS SUCH THAT THE MANHOLES WILL BE SELF CLEANING AND FREE OF AREAS WHERE SOLIDS COULD BE DEPOSITED AS SEWAGE FLOWS THROUGH THE MANHOLE FROM ALL INLET PIPES TO THE OUTLET PIPE. FLOW CHANNELS SHALL BE FORMED TO MATCH THE BOTTOM HALVES OF THE INFLOWING PIPES AND THE OUTFLOWING PIPE AS SHOWN BY THE DRAWINGS EXCEPT FOR INSIDE DROP MANHOLES. FLOW CHANNELS FOR INSIDE DROP MANHOLES SHALL BE CONSTRUCTED AS INDICATED BY THE DRAWING. MANHOLE FLOORS SHALL HAVE SLOPES OF 3 INCHES PER FOOT IN THE AREAS OUTSIDE OF THE FLOW CHANNELS SLOPED TOWARD THE FLOW CHANNELS. PIPES LAID THROUGH MANHOLES SHALL HAVE THE TOP HALF REMOVED TO MEET LINES FOR THE FULL INSIDE DIAMETER OF THE MANHOLE. MANHOLE FLOORS SHALL THEN BE SHAPED AROUND THE BOTTOM HALF OF THE PIPE WHICH FORMS THE FLOW CHANNEL.
14. PIPES INSTALLED WITHIN THE EXCAVATION MADE FOR THE MANHOLE SHALL BE CRADLED WITH CONCRETE TO THE LIMITS OF THE MANHOLE EXCAVATION. WHEN CLAY PIPE IS USED, THE CRADLE SHALL EXTEND TO THE FIRST JOINT OUTSIDE THE MANHOLE. THE CRADLE SHALL BE TERMINATED AT THE CLAY PIPE JOINT IN A MANNER WHICH WILL MAINTAIN THE FLEXIBILITY OF THE JOINT. COST OF CRADLE WITHIN MANHOLE EXCAVATION OR TO CLAY PIPE JOINTS ADJACENT TO MANHOLE SHALL BE INCLUDED IN THE UNIT PRICE BID FOR THE MANHOLE.
15. MANHOLE COVER CASTINGS AND MANHOLE FRAME CASTINGS SHALL CONFORM TO THE REQUIREMENTS AS INDICATED IN THE STANDARD SPECIFICATIONS AND AS SHOWN IN THE STANDARD DETAIL DRAWING.
16. THE VERTICAL FREE FALL DROP INSIDE MANHOLES SHALL NOT EXCEED 2'.

    THE CROWNS OF INFLOWING PIPES SHALL NEVER BE SET LOWER THAN THE CROWN OF THE OUTFLOWING PIPE.
17. STANDARD MANHOLES AND STANDARD INSIDE DROP MANHOLES SHALL BE BID AS STANDARD MANHOLES FOR THE TYPE AND DIAMETER INDICATED. OUTSIDE DROP MANHOLES SHALL BE BID AS STANDARD OUTSIDE DROP MANHOLES FOR THE TYPE AND DIAMETER INDICATED. ALL MANHOLE DIAMETERS WILL BE 4' UNLESS INDICATED OTHERWISE.
18. A BRICK MASONRY COLLAR SHALL BE INSTALLED BETWEEN THE CAST IRON FRAME AND THE CONCENTRIC CONE. THE COLLAR WILL HAVE 8" WALLS AND A VERTICAL HEIGHT OF 6" MINIMUM AND 18" MAXIMUM. A 1" COAT OF MORTAR WILL BE PLASTERED ON THE OUTSIDE OF THE COLLAR.

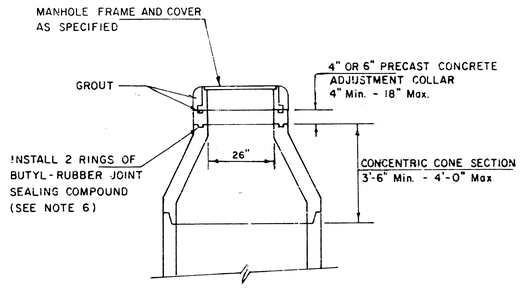

ALTERNATE CONSTRUCTION
IN UNPAVED AREAS

Sht. 6 of 9

NOTE NO. 16 REVISED JAN. 1991

Revised 3-21-89

Revised 8-10-88

Revised: June 17, 1985

SEWER APPURTENANCES DETAILS

ADOPTED AS STANDARD DESIGN BY

City of Wichita, Kansas

STANDARD MANHOLE TYPE "C"

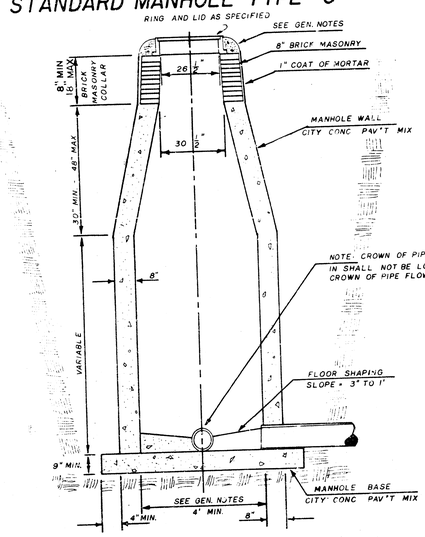

INSIDE DROP MANHOLE TYPE "C"

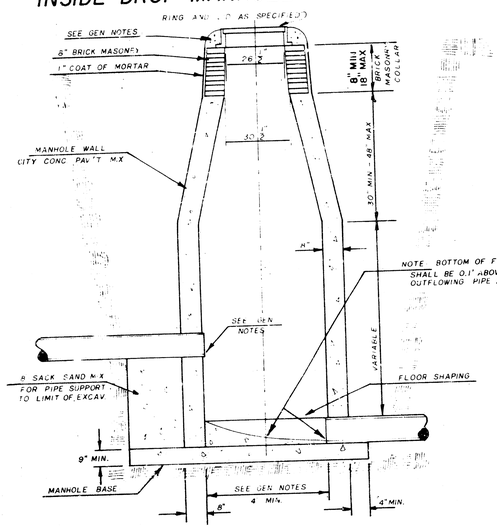

OUTSIDE DROP MANHOLE TYPE "C"

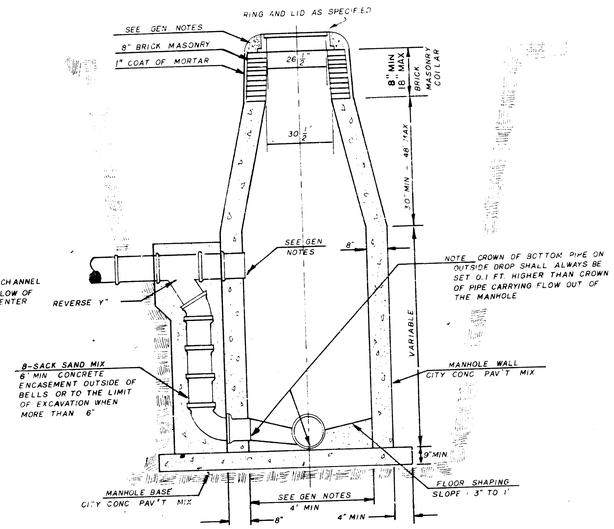

GENERAL NOTES

1. MORTAR USED IN MASONRY CONSTRUCTION SHALL CONTAIN 8 SACKS OF CEMENT PER CUBIC YARD. CONCRETE USED IN MANHOLE WALLS AND BASES SHALL CONFORM TO THE REQUIREMENTS OF CONCRETE FOR CONCRETE PAVEMENT CONSTRUCTION AS SPECIFIED IN THE CITY STANDARD PAVING SPECIFICATIONS USING CITY CONCRETE PAVEMENT MIX WITHOUT AIR ENTRAINING ADMIXTURE. MORTAR SHALL BE PLACED AROUND THE MANHOLE RING AS SHOWN ON THE DRAWINGS WHEN MANHOLES ARE CONSTRUCTED IN UNPAVED AREAS. TYPE "C" MANHOLES CAN BE CONSTRUCTED ONLY WHERE PIPE SIZES ARE 8" OR SMALLER. THE INSIDE DIAMETER OF TYPE "C" MANHOLES SHALL BE 4'. COMPLETED MANHOLE SHALL BE WITHOUT LEAKS AND WATER TIGHT.

2. REINFORCING STEEL SHALL BE INSTALLED IN THE MANHOLE BASE. REINFORCING STEEL SHALL CONSIST OF NO. 4 BARS PLACED ON 6" CENTERS IN BOTH DIRECTIONS. REINFORCING STEEL SHALL BE PLACED 6" ABOVE THE BOTTOM OF THE MANHOLE BASE. COST OF FURNISHING AND INSTALLING REINFORCING STEEL SHALL BE INCLUDED IN THE UNIT PRICE BID FOR THE MANHOLE.

3. AN OPENING SHALL BE CUT IN THE MANHOLE WALL FOR THE UPPER INLET PIPE FOR INSIDE AND OUTSIDE DROP MANHOLES. THE UPPER INLET PIPE SHALL BE GROUTED INTO THIS OPENING WITH NON-SHRINK GROUT. THE EXTERIOR OF THIS COMPLETED CONNECTION SHALL BE SEALED WITH AN APPROVED BITUMINOUS COATING SUCH THAT THE CONNECTION WILL BE WATER TIGHT.

4. THE FLOORS OF ALL MANHOLES SHALL BE SHAPED WITH FLOW CHANNELS SUCH THAT THE MANHOLES WILL BE SELF CLEANING AND FREE OF AREAS WHERE SOLIDS COULD BE DEPOSITED AS SEWAGE FLOWS THROUGH THE MANHOLE FROM ALL INLET PIPES TO THE OUTLET PIPE. FLOW CHANNELS SHALL BE FORMED TO MATCH THE BOTTOM HALVES OF THE INFLOWING PIPES AND THE OUTFLOWING PIPE AS SHOWN BY THE DRAWINGS EXCEPT FOR INSIDE DROP MANHOLES. FLOW CHANNELS FOR INSIDE DROP MANHOLES SHALL BE CONSTRUCTED AS INDICATED BY THE DRAWING. MANHOLE FLOORS SHALL HAVE SLOPES OF 3 INCHES PER FOOT IN THE AREAS OUTSIDE OF THE FLOW CHANNELS SLOPED TOWARD THE FLOW CHANNELS. PIPES LAID THROUGH MANHOLE SHALL HAVE THE TOP HALF REMOVED TO NEAT LINES FOR THE FULL INSIDE DIAMETER OF THE MANHOLE. MANHOLE FLOORS SHALL THEN BE SHAPED AROUND THE BOTTOM HALF OF THE PIPE WHICH FORMS THE FLOW CHANNEL.

5. PIPES INSTALLED WITHIN THE EXCAVATION MADE FOR THE MANHOLE SHALL BE CRADLED WITH CONCRETE TO THE LIMITS OF THE MANHOLE EXCAVATION. WHEN CLAY PIPE IS USED, THE CRADLE SHALL EXTEND TO THE FIRST JOINT OUTSIDE THE MANHOLE. THE CRADLE SHALL BE TERMINATED AT THE CLAY PIPE JOINT IN A MANNER WHICH WILL MAINTAIN THE FLEXIBILITY OF THE JOINT. COST OF CRADLE WITHIN MANHOLE EXCAVATION OR TO CLAY PIPE JOINTS ADJACENT TO MANHOLE SHALL BE INCLUDED IN THE UNIT PRICE BID FOR THE MANHOLE.

6. MANHOLE COVER CASTINGS AND MANHOLE FRAME CASTINGS SHALL CONFORM TO THE REQUIREMENTS AS INDICATED IN THE STANDARD SPECIFICATIONS AND AS SHOWN IN THE STANDARD DETAIL DRAWING.

7. THE VERTICAL FREE FALL DROP INSIDE MANHOLES SHALL NOT EXCEED 2'.

THE CROWNS OF INFLOWING PIPES SHALL NEVER BE SET LOWER THAN THE CROWN OF THE OUTFLOWING PIPE.

STANDARD MANHOLE TYPE "A" AND STANDARD INSIDE DROP MANHOLES TYPE "A" SHALL BE BID AS STANDARD MANHOLES FOR THE TYPE AND DIAMETER INDICATED. OUTSIDE DROP MANHOLES TYPE "C" SHALL BE BID AS STANDARD OUTSIDE DROP MANHOLES FOR THE TYPE AND DIAMETER INDICATED. ALL MANHOLE DIAMETERS WILL BE 4' UNLESS INDICATED OTHERWISE.

NOTE NO. 7 REVISED JAN 1991

JNL JAN. 1992

SEWER APPURTENANCES DETAILS

ADOPTED AS STANDARD DESIGN
BY

CITY OF WICHITA, KANSAS

TYPE "D" MANHOLE

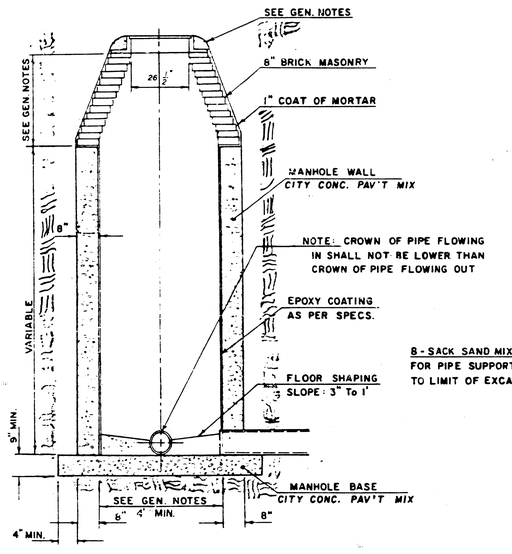

TYPE "D" INSIDE DROP MANHOLE

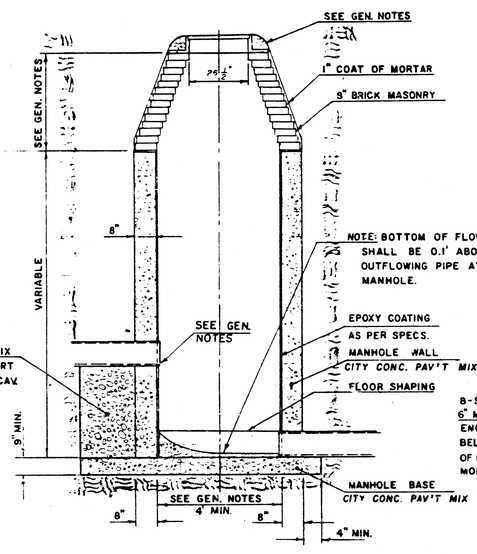

TYPE "D" OUTSIDE DROP MANHOLE

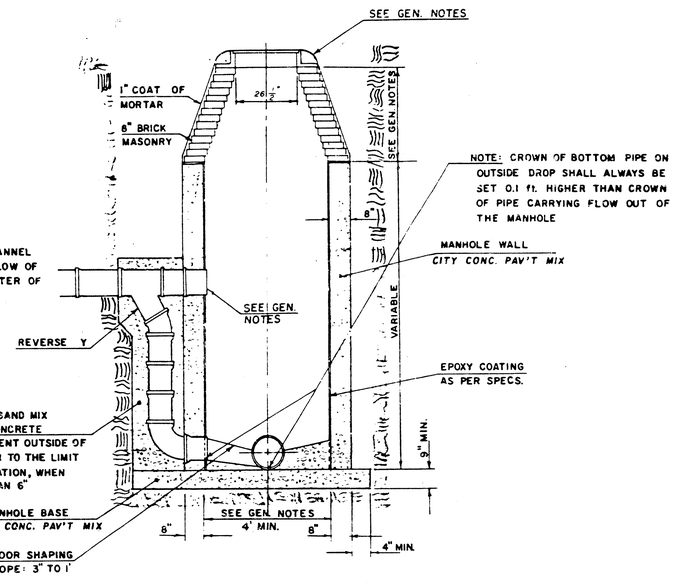

GENERAL NOTES

1. MORTAR USED IN MASONRY CONSTRUCTION SHALL CONTAIN 6 SACKS OF CEMENT PER CUBIC YARD. CONCRETE USED IN MANHOLE WALLS AND BASES SHALL CONFORM TO THE REQUIREMENTS OF CONCRETE FOR CONCRETE PAVEMENT CONSTRUCTION AS SPECIFIED IN THE CITY STANDARD PAVING SPECIFICATIONS USING CITY CONCRETE PAVEMENT MIX WITHOUT AIR ENTRAINING ADMIXTURES. MORTAR SHALL BE PLACED AROUND THE MANHOLE RING AS SHOWN ON THE DRAWINGS WHEN MANHOLES ARE CONSTRUCTED IN UNPAVED AREAS.

   ALL INSIDE SURFACES OF THE CONCRETE MANHOLE WALL WHICH WOULD BE EXPOSED TO SEWER GAS SHALL BE PROTECTED BY AN APPROVED EPOXY COATING. TYPE "D" MANHOLES MAY BE USED ON PIPE SIZES 8" TO 36" WHEN THE MANHOLE DEPTH EXCEEDS THE REQUIRED CORSEL HEIGHT BY 1' PLUS THE OUTSIDE DIAMETER OF THE LARGEST PIPE IN THE MANHOLE.

   MANHOLES CONSTRUCTED WHERE PIPE SIZES ARE SMALLER THAN 24" SHALL HAVE A DIAMETER OF 4'. MANHOLES CONSTRUCTED WHERE THE PIPE SIZES ARE 24" OR LARGER SHALL HAVE A DIAMETER OF 5'. THE HEIGHT OF THE CORBELS ON 4' DIAMETER MANHOLES SHALL BE 4' MANHOLES HAVING A DIAMETER OF 5' SHALL HAVE CORBELS 6' IN HEIGHT. COMPLETED MANHOLE SHALL BE WITHOUT LEAKS AND WATER TIGHT.

2. REINFORCING STEEL SHALL BE INSTALLED IN THE MANHOLE BASE. REINFORCING STEEL SHALL CONSIST OF NO. 4 BARS PLACED ON 6" CENTERS IN BOTH DIRECTIONS. REINFORCING STEEL SHALL BE PLACED 6" ABOVE THE BOTTOM OF THE MANHOLE BASE. COST OF FURNISHING AND INSTALLING REINFORCING STEEL SHALL BE INCLUDED IN THE UNIT PRICE BID FOR THE MANHOLE.

3. AN OPENING SHALL BE CUT IN THE MANHOLE WALL FOR THE UPPER INLET PIPE FOR INSIDE AND OUTSIDE DROP MANHOLES. THE UPPER INLET PIPE SHALL BE GROUTED INTO THIS OPENING WITH NON-SHRINK GROUT. THE EXTERIOR OF THIS COMPLETED CONNECTION SHALL BE SEALED WITH AN APPROVED BITUMINOUS COATING SUCH THAT THE CONNECTION WILL BE WATER TIGHT. THE INTERIOR PLASTIC LINING SHALL BE SEALED AROUND THE INLET PIPE OPENING IN SUCH A MANNER THAT WILL EFFECTIVELY MAINTAIN THE INTEGRITY OF THE PROTECTIVE PLASTIC LINER.

4. THE FLOORS OF ALL MANHOLES SHALL BE SHAPED WITH FLOW CHANNELS SUCH THAT THE MANHOLES WILL BE SELF CLEANING AND FREE OF AREAS WHERE SOLIDS COULD BE DEPOSITED AS SEWAGE FLOWS THROUGH THE MANHOLE FROM ALL INLET PIPES TO THE OUTLET PIPE. FLOW CHANNELS SHALL BE FORMED TO MATCH THE BOTTOM HALVES OF THE INFLOWING PIPES AND THE OUTFLOWING PIPE AS SHOWN BY THE DRAWINGS EXCEPT FOR INSIDE DROP MANHOLES. FLOW CHANNELS FOR INSIDE DROP MANHOLES SHALL BE CONSTRUCTED AS INDICATED BY THE DRAWING. MANHOLE FLOORS SHALL HAVE SLOPES OF 3 INCHES PER FOOT IN THE AREAS OUTSIDE OF THE FLOW CHANNELS SLOPED TOWARD THE FLOW CHANNELS. PIPES LAID THROUGH MANHOLES SHALL HAVE THE TOP HALF REMOVED TO NEAT LINES FOR THE FULL INSIDE DIAMETER OF THE MANHOLE. MANHOLE FLOORS SHALL THEN BE SHAPED AROUND THE BOTTOM HALF OF THE PIPE WHICH FORMS THE FLOW CHANNEL.

5. PIPES INSTALLED WITHIN THE EXCAVATION MADE FOR THE MANHOLE SHALL BE CRADLED WITH CONCRETE TO THE LIMITS OF THE MANHOLE EXCAVATION. WHEN CLAY PIPE IS USED, THE CRADLE SHALL EXTEND TO THE FIRST JOINT OUTSIDE THE MANHOLE. THE CRADLE SHALL BE TERMINATED AT THE CLAY PIPE JOINT IN A MANNER WHICH WILL MAINTAIN THE FLEXIBILITY OF THE JOINT. COST OF CRADLE WITHIN MANHOLE EXCAVATION OR TO CLAY PIPE JOINTS ADJACENT TO MANHOLE SHALL BE INCLUDED IN THE UNIT PRICE BID FOR THE MANHOLE.

6. MANHOLE COVER CASTINGS AND MANHOLE FRAME CASTINGS SHALL CONFORM TO THE REQUIREMENTS AS INDICATED IN THE STANDARD SPECIFICATIONS AND AS SHOWN IN THE STANDARD DETAIL DRAWING.

7. THE VERTICAL FREE FALL DROP INSIDE MANHOLES SHALL NOT EXCEED 2'.

   THE CROWNS OF INFLOWING PIPES SHALL NEVER BE SET LOWER THAN THE CROWN OF THE OUTFLOWING PIPE.

8. STANDARD MANHOLES TYPE "D" AND STANDARD INSIDE DROP MANHOLES TYPE "D" SHALL BE BID AS STANDARD MANHOLES FOR THE TYPE AND DIAMETER INDICATED. OUTSIDE DROP MANHOLES TYPE "D" SHALL BE BID AS STANDARD OUTSIDE DROP MANHOLES FOR THE TYPE AND DIAMETER INDICATED. ALL MANHOLE DIAMETERS WILL BE 4' UNLESS INDICATED OTHERWISE.

NOTE: EPOXY COATING ON INTERIOR CONCRETE SURFACES MAY BE DELETED WHEN TYPE "D" MANHOLES ARE CONSTRUCTED ON SEWERS WITH DIAMETERS SMALLER THAN 10".

NOTE NO. 7 REVISED JAN. 1991

APRIL 1987

MANHOLE FRAME AND COVER DETAIL

ADOPTED AS STANDARD DESIGN

BY

City of Wichita, Kansas

MANHOLE COVER

Weight: 180 Lbs.

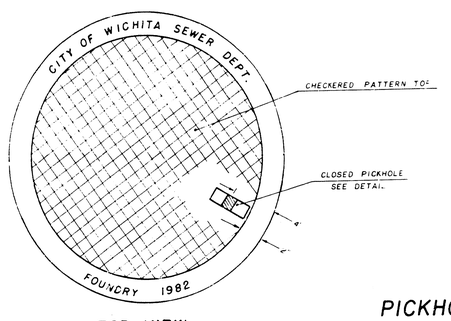

TOP VIEW

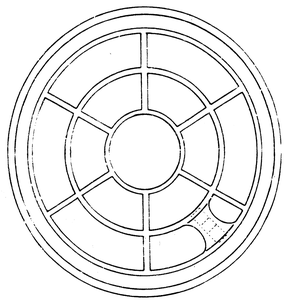

BOTTOM VIEW

PICKHOLE DETAIL

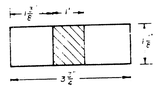

TOP VIEW

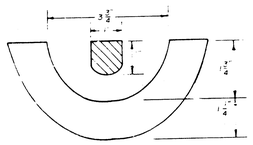

SECTION VIEW

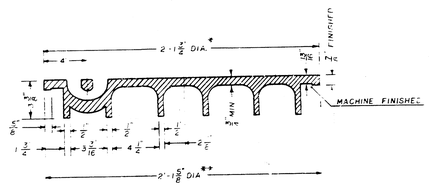

SECTION VIEW

* OUTSIDE DIA TOP OF COVER

** OUTSIDE DIA BOTTOM OF COVER

MANHOLE FRAME

Weight: 240 Lbs.

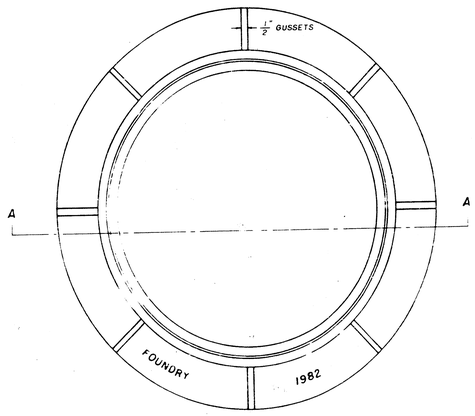

TOP VIEW

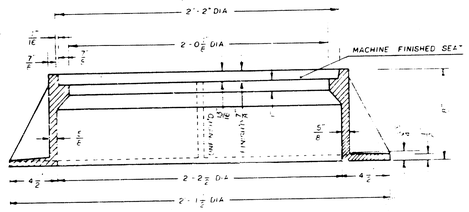

SECTION A-A

GENERAL NOTES

1. MANHOLE CASTINGS SHALL BE MANUFACTURED USING GOOD QUALITY GRAY IRON CONFORMING TO CLASS 30 OF A.S.T.M. DESIGNATION A-48. DIMENSIONS AND WEIGHTS SHOWN ON THE DETAILED DRAWINGS SHALL BE CONSIDERED AS MINIMUM REQUIREMENTS AND ANY DEVIATIONS FROM THE DIMENSIONS SHOWN MUST BE SPECIFICALLY APPROVED. THE FINISHED CASTINGS SHALL BE OF UNIFORM QUALITY, FREE FROM BLOWHOLES, POROSITY, HARD SPOTS, SHRINKAGE DISTORTIONS OR OTHER DEFECTS.

2. MANHOLE CASTINGS SHALL BE COATED WITH AN ASPHALT PAINT RESULTING IN A SMOOTH, TOUGH AND TENACIOUS COATING WHICH IS NOT BRITTLE OR TACKY.

3. MANHOLE CASTINGS SHALL BE MANUFACTURED SUCH THAT A COVER MANUFACTURED BY ANY ONE FOUNDRY WILL FIT INTERCHANGEABLY INTO A FRAME MANUFACTURED BY ANOTHER FOUNDRY AND STILL MEET ALLOWABLE CLEARANCES AND NON-ROCKING REQUIREMENTS. THIS WILL REQUIRE MANUFACTURING OF THE MATCHING FACES ON THE COVER AND THE FRAME TO CLOSE TOLERANCES.

4. THE OUTSIDE CIRCUMFERENCE OF THE VERTICAL FACE OF THE COVER AND THE INSIDE CIRCUMFERENCE OF THE VERTICAL FACE IN THE FRAME RECESS SHALL BE MANUFACTURED TO TOLERANCES SUCH THAT THE CLEARANCE BETWEEN THE COVER AND FRAME WILL NOT EXCEED 1/8" AT ANY POINT AROUND THE CIRCUMFERENCE OF THE COVER. THE SEATING SURFACES BETWEEN THE COVER AND FRAME SHALL BE MACHINED SUCH THAT THESE SURFACES SHALL MAKE FULL CONTACT FOR THEIR FULL CIRCUMFERENCE TO PRECLUDE THE COVER FROM ROCKING IN THE FRAME.

5. THE MANHOLE FRAME AND COVER SHALL BE MARKED WITH LETTERING INDICATING THE NAME OF THE MANUFACTURER AND THE YEAR WHEN THE COVER OR FRAME WAS CAST. THE COVER SHALL BE FURTHER IDENTIFIED WITH REGARDS TO OWNERSHIP USING LETTERS AT LEAST 1" IN HEIGHT. THIS IDENTIFICATION SHALL BE "CITY OF WICHITA SEWER DEPARTMENT". THE WORD DEPARTMENT MAY BE ABBREVIATED. THE TEXTURE OF THE TOP SURFACE OF THE COVER SHALL BE MANUFACTURED IN A CHECKERED PATTERN DESIGN AS INDICATED ON THE DRAWINGS. SMOOTH BLOCKOUTS SHALL BE UTILIZED TO HIGHLIGHT THE LETTERING ON THE COVER SURFACE. THE TOTAL AREA OF SMOOTH SURFACE BLOCKOUT SHALL NOT EXCEED THE AREA AS INDICATED ON THE DRAWING. POSITIONING OF SMOOTH BLOCKOUTS AND LETTERING MAY VARY FROM THAT SHOWN ON THE DETAILED DRAWINGS.

DEC. 1981