CONSTRUCTION PLANS FOR

LATERAL 35, MAIN 12

OF THE

SOUTHWEST INTERCEPTOR SEWER

IN

THE CITY OF WICHITA,

SEDGWICK COUNTY, KANSAS

MICHAEL E. LINDEBAK, P.E.-CITY ENGINEER

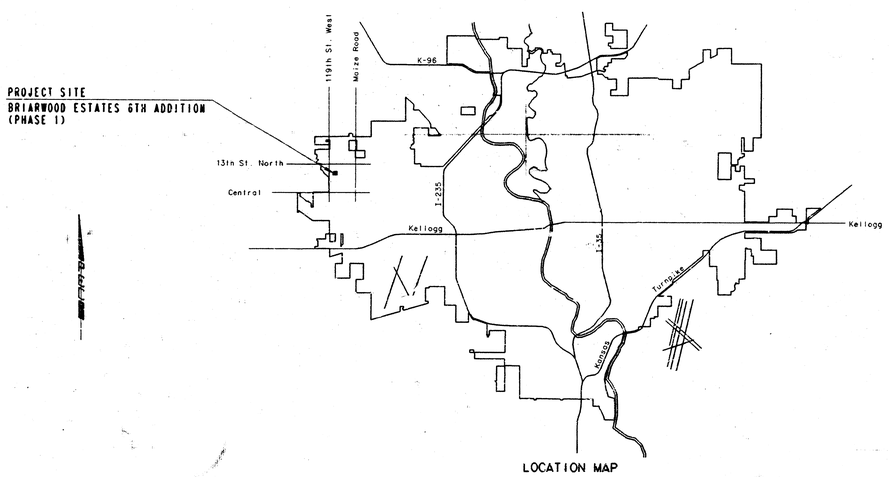

LOCATION MAP

INDEX OF SHEETS

SHEET NO. 1	TITLE SHEET
SHEET NO. 2	KEY MAP
SHEET NO. 3	EASEMENT GRADING PLAN
SHEET NO. 4	PLAT
SHEET NO. 5-6	PLAN/PROFILE
SHEET NO. 7	TYPE "P" MANHOLE DETAILS
SHEET NO. 8	TYPE "C" MANHOLE DETAILS
SHEET NO. 9	TYPE "D" MANHOLE DETAILS
SHEET NO. 10	SHALLOW MH DETAILS
SHEET NO. 11	FRAME & COVER DETAILS
SHEET NO. 12	VERTICAL RISER DETAILS

Booked 6-16-93
JKB
As Per Plan

INDEX CODE 741215

CITY OF WICHITA PROJECT NO. 468-76-245-82214-000-000-001

SEPTEMBER, 1992

PLANS PREPARED BY

PROFESSIONAL ENGINEERING CONSULTANTS, P.A.

ENGINEERS

WICHITA, KANSAS

MICHAEL D. SCHOMAKER
LICENSED
6778
KANSAS
PROFESSIONAL ENGINEER

DRAWING NAME: 34-92418-1 SS TITLE
LOCATION: E4 #375
CENTER COORDINATES:
ROTATION ANGLE:
DATE LAST WORKED ON: OCT. 09, 1992
SPECIAL INSTRUCTIONS:

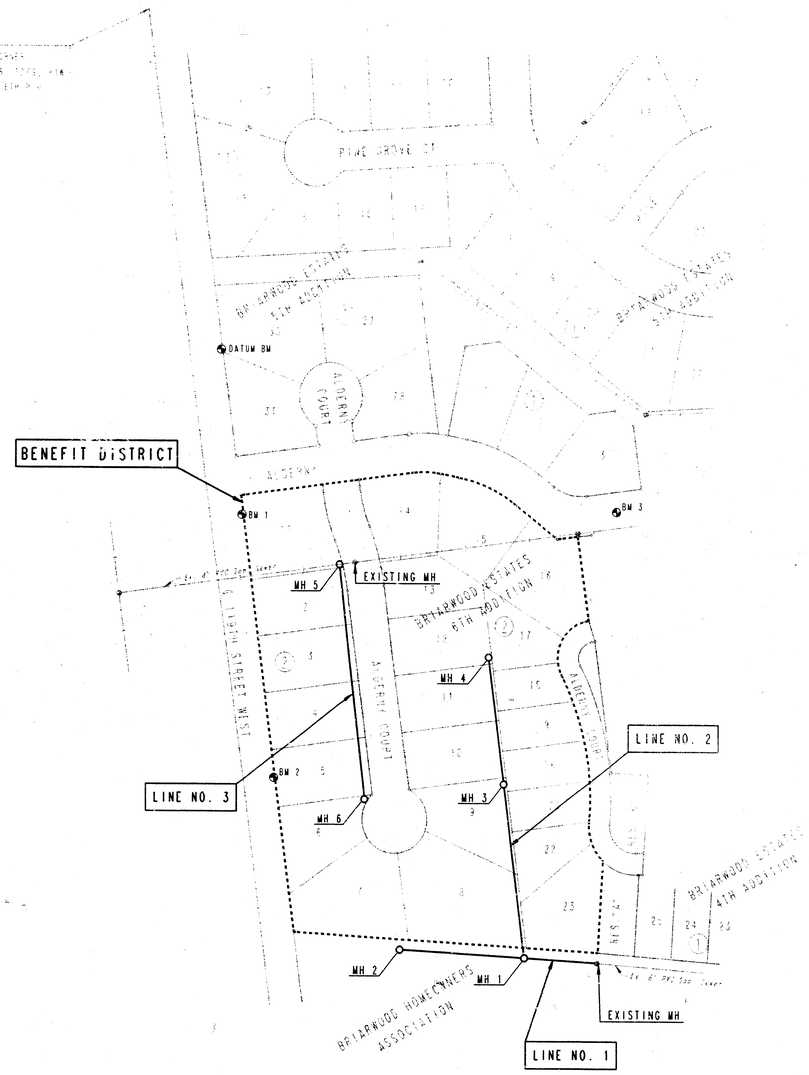

SCALE: 1"=100'

BENCH MARK LIST

DATUM BM - 40d STEP NAIL IN EAST SIDE OF HIGH LINE POLE APPROX. 190' NORTH OF CENTERLINE ALDERNY AND 48' EAST OF CENTERLINE 119TH STREET WEST.
ELEV. = 151.63

BM #1 - RR SPIKE IN EAST SIDE OSAGE ORANGE TREE IN HEDGE ROW, 57' SOUTH OF CENTERLINE ALDERNY AND 48' EAST OF CENTERLINE 119TH STREET WEST ON WEST SIDE LOT 11, BLOCK 2, BRIARWOOD ESTATES 6TH ADDITION.
ELEV. = 147.85

BM #2 - 40d STEP NAIL IN EAST SIDE OF HIGH LINE POLE APPROX. 450' SOUTH OF CENTERLINE ALDERNY AND 48' EAST OF CENTERLINE 119TH STREET WEST ON WEST SIDE LOT 5, BLOCK 2, BRIARWOOD ESTATES 6TH ADDITION.
ELEV. = 145.76

BM #3 - CHISELED "□" ON BACK CURB AT NORTH END OF MEDIAN AT ALDERNY COURT ON SOUTH SIDE ALDERNY SOUTH OF LOT 3, BLOCK 1, BRIARWOOD ESTATES 6TH ADDITION.
ELEV. = 149.10

GENERAL NOTES

1. ALL CONSTRUCTION AND MATERIALS TO COMPLY WITH CITY OF WICHITA SPECIFICATIONS AND STANDARDS.
2. ALL ELEVATIONS SHOWN ARE BASED ON CITY OF WICHITA DATUM.
3. THE CONTRACTOR SHALL LIMIT THE EXTENT OF TRENCH TO REMAIN OPEN OVERNIGHT AND WEEKENDS TO LESS THAN 50 FEET.
4. AT LEAST 48 HOURS PRIOR TO BEGINNING EXCAVATION (EXCLUDING WEEKENDS AND HOLIDAYS), THE CONTRACTOR SHALL CONTACT THE KANSAS ONE-CALL SYSTEM, A UTILITY LOCATION SERVICE, AT (316) 687-2470 TO REQUEST THE FOLLOWING UTILITY COMPANIES TO LOCATE ANY EXISTING LINES WITHIN THE PROJECT AREA: KPL/GAS SERVICE, ARKLA, THE WICHITA WATER DEPARTMENT, MULTIMEDIA CABLEVISION, K.G.&E., AND SOUTHWESTERN BELL TELEPHONE.
5. UNDERGROUND UTILITY SERVICE LINES AND OVERHEAD UTILITY POLE LINES ARE TO BE ADJUSTED AS NECESSARY BY OTHERS PRIOR TO CONSTRUCTION UNLESS THE PLANS SPECIFICALLY CALL FOR THEIR ADJUSTMENT BY THE CONTRACTOR OR UNLESS THE PLANS SPECIFICALLY IDENTIFY A UTILITY TO BE ADJUSTED BY ITS OWNER DURING CONSTRUCTION. EXISTING UTILITIES AND THEIR LOCATIONS, AS SHOWN ON THE PLANS, REPRESENT THE BEST INFORMATION OBTAINABLE FOR THE DESIGN. THE CONTRACTOR WILL BE REQUIRED TO WORK AROUND EXISTING UTILITIES WITHIN THE RIGHT-OF-WAY WHICH DO NOT CONFLICT WITH PROPOSED CONSTRUCTION.
6. THE CONTRACTOR SHALL BE RESPONSIBLE FOR PRESERVING PROPERTY IRONS. THE CONTRACTOR WILL BE REQUIRED TO RE-ESTABLISH ANY PROPERTY IRONS WHICH ARE DAMAGED OR DESTROYED BY HIS CONSTRUCTION OPERATIONS. SUCH IRONS SHALL BE RE-ESTABLISHED BY A LICENSED LAND SURVEYOR IN ACCORDANCE WITH STATE LAWS. ALL COSTS FOR THIS WORK SHALL BE SUBSIDIARY TO THE LUMP SUM PRICE BID FOR "SITE RESTORATION".
7. CONTRACTOR SHALL PROVIDE POSITIVE DRAINAGE AWAY FROM ALL MANHOLE COVERS.
8. UNLESS OTHERWISE SPECIFIED ON THE PLANS, MANHOLES MAY BE TYPE "B", "C", OR "D" MANHOLES. MANHOLES SHALL BE CONSTRUCTED IN ACCORDANCE WITH THE STANDARD SPECIFICATIONS AND THE STANDARD DETAIL DRAWINGS.
9. ALL LAWN/TURF AREAS DISTURBED BY CONSTRUCTION OF THE PROPOSED IMPROVEMENTS SHALL BE RESTORED WITH THE SAME GRASS/SOD AS EXISTING. RESTORATION OF DISTURBED AREAS SHALL INCLUDE, BUT NOT BE LIMITED TO, TOP SOIL PREPARATION, SEEDING, MULCH, AND/OR RESEEDING. ALL SEEDING/SODDING WORK SHALL BE IN ACCORDANCE WITH THE CITY OF WICHITA STANDARD SPECIFICATIONS AND THE CITY OF WICHITA ADMINISTRATIVE REGULATION NO. AR78 WHICH COVERS CLEANUP AND RESTORATION OR REPLACEMENT FOLLOWING CONSTRUCTION. ALL COSTS FOR THIS WORK SHALL BE SUBSIDIARY TO THE LUMP SUM PRICE BID FOR "SITE RESTORATION".
10. RUBBLE FROM THE REMOVAL OF MISCELLANEOUS STRUCTURES INCLUDING ANY TREES REMOVED, TREE TRIMMINGS, AND EXCESS EXCAVATION WHICH IS TO BE WASTED SHALL BE DISPOSED OF ON SITES PROVIDED BY THE CONTRACTOR. THESE SITES SHALL ALSO BE APPROVED BY THE ENGINEER AS TO SUITABILITY, APPEARANCE, AND SITE LOCATION. LOCATIONS THAT, IN THE OPINION OF THE ENGINEER, WILL LEAVE AN UNSIGHTLY APPEARANCE WILL NOT BE APPROVED. ALL DISPOSAL SITES MUST BE APPROVED BY THE KANSAS DEPARTMENT OF HEALTH AND ENVIRONMENT. MATERIAL EITHER STOCKPILED OR DISPOSED OF IN A FLOOD PLAIN WILL REQUIRE A KANSAS STATE BOARD OF AGRICULTURE PERMIT. ANY MATERIAL DUMPED IN WATERS OF THE UNITED STATES OR WETLANDS IS SUBJECT TO U.S. CORPS. OF ENGINEERS PERMITTING REGULATIONS. ANY MATERIAL BURIED OR STOCKPILED BEYOND APPROVED CONSTRUCTION LIMITS MAY REQUIRE ARCHAEOLOGICAL INVESTIGATIONS UNLESS BURIED IN A PREVIOUSLY APPROVED DISPOSAL LOCATION.
11. THE CONTRACTOR SHALL AVOID REMOVAL OR TRIMMING OF ANY TREES OR SHRUBS WHERE POSSIBLE. WHERE THE CONTRACTOR BELIEVES THE REMOVAL OR TRIMMING IS UNAVOIDABLE, HE SHALL COORDINATE SUCH WORK WITH THE ENGINEER. COSTS FOR TREE/SHRUB REMOVAL AND TRIMMING REGARDLESS OF SIZE SHALL BE CONSIDERED SUBSIDIARY TO THE LUMP SUM PRICE BID FOR "SITE CLEARING".
12. CONTRACTOR SHALL GRADE THE SANITARY SEWER ALIGNMENT TO THE PROFILE AND ELEVATIONS SHOWN ON THE EASEMENT GRADING PLAN. ALL COSTS FOR EASEMENT GRADING SHALL BE SUBSIDIARY TO THE LUMP SUM PRICE BID FOR "EASEMENT GRADING".
13. THE CONTRACTOR SHALL PREVENT ANY CONSTRUCTION DEBRIS FROM ENTERING THE EXISTING SANITARY SEWER DURING CONSTRUCTION.
14. THE CONTRACTOR SHALL GIVE ALL PROPERTY OWNERS AND/OR TENANTS OF DEVELOPED PROPERTY ABUTTING THE CONSTRUCTION OF THIS PROJECT A MINIMUM OF TEN (10) DAYS ADVANCE NOTICE PRIOR TO START OF CONSTRUCTION.
15. WHERE THE PROPOSED SANITARY SEWER CONSTRUCTION REQUIRES CONNECTION TO AN EXISTING PIPE STUB, THE CONTRACTOR SHALL EXCAVATE TO DETERMINE THE FLOWLINE ELEVATION, SLOPE, HORIZONTAL ALIGNMENT, PIPE TYPE, AND CONDITION OF THE STUB PRIOR TO BEGINNING CONSTRUCTION. ANY DISCREPANCIES BETWEEN THE PLANS AND THE DETERMINED LOCATION SHALL BE TRANSMITTED TO THE FIELD ENGINEER SO THAT ANY PLAN MODIFICATIONS MAY BE MADE. IF REMOVAL, REPLACEMENT, OR RESETTING OF THE STUB IS REQUIRED TO FACILITATE CONNECTION TO THE MANHOLE, THE CONTRACTOR SHALL COMPLETE SUCH WORK AT NO ADDITIONAL COST TO THE PROJECT.

PLAN	BY
CHECKED	MDK
CHECKED	
CHECKED	

DRAWING NAME: 34-92418-1 BW06 SS KEY
LOCATION: SEE #376
LAST RECORDED NOTES:
ROTATION ANGLE:
DATE LAST WORKED ON: OCT. 09, 1992
SPECIAL INSTRUCTIONS:

MICHAEL D. SCHLIMMER LICENSED 6778 KANSAS PROFESSIONAL ENGINEER

No.	Revision	By	Date

LATERAL 35, MAIN 12 OF THE
SOUTHWEST INTERCEPTOR SEWER

KEY MAP

MICHAEL E. LINDEBAK, P.E. - CITY ENGINEER
CITY OF WICHITA PROJECT NO. 468-76-245-82214-000-000-001

PROFESSIONAL ENGINEERING CONSULTANTS, P.A.
ENGINEERS
WICHITA, KANSAS

Designed by WDS, WDK	Job No. 34-92418-1	Sht. 2 of 12
Drawn by GW	Date SEPTEMBER, 1992	

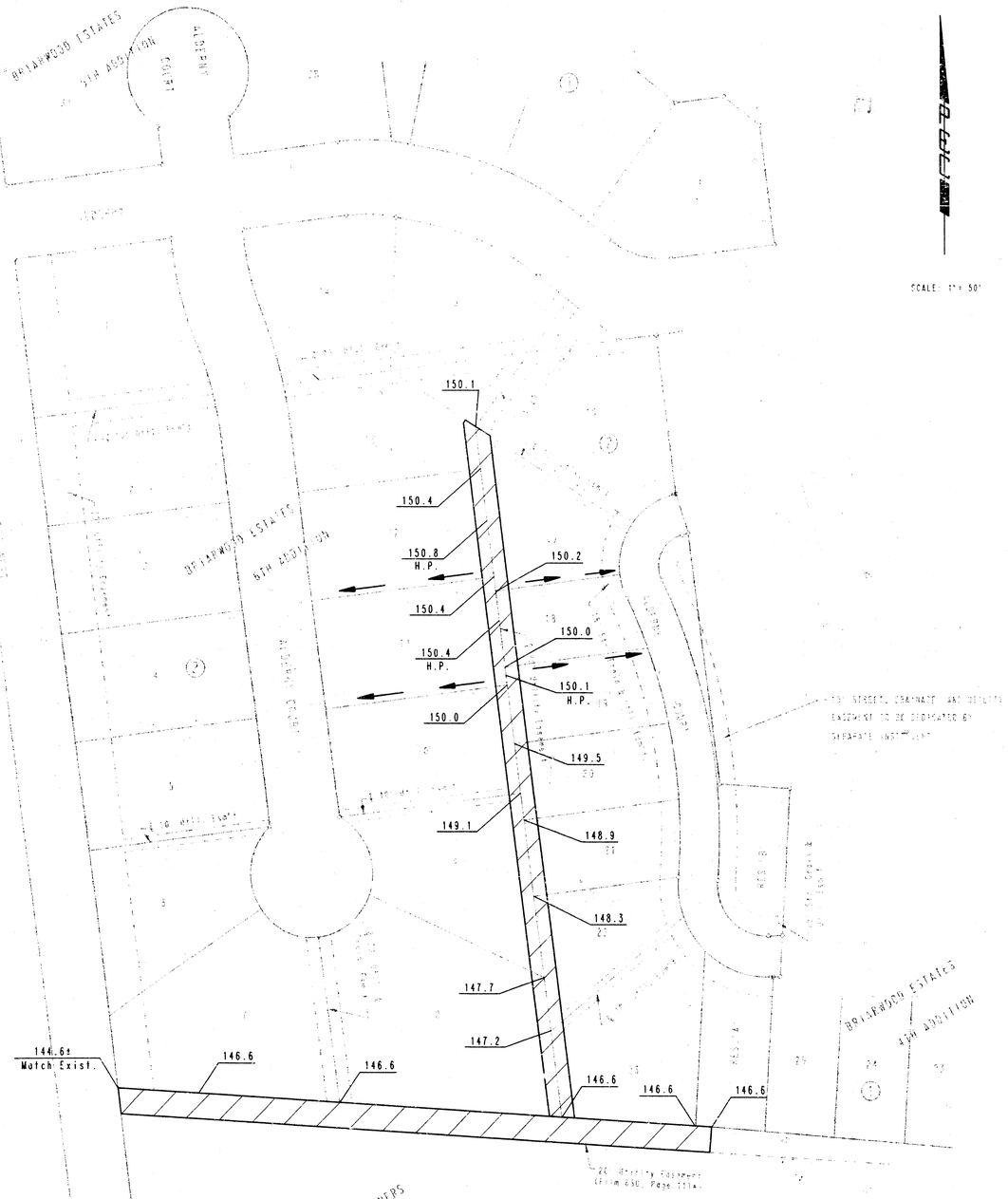

SCALE: 1" = 50'

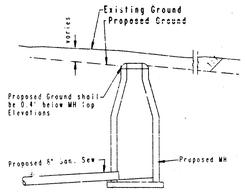

TYPICAL PROFILE

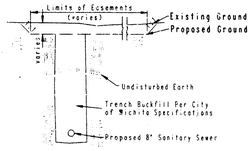

TYPICAL SECTION

"CUT" SITUATIONS

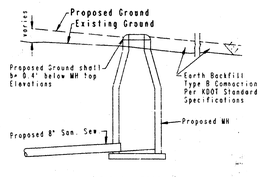

TYPICAL PROFILE

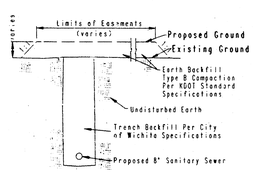

TYPICAL SECTION

"FILL" SITUATIONS

EASEMENT GRADING

= AREAS TO BE GRADED

= Locations where surface drainage will be directed along the side lot lines from the rear yard easements to the front of the lot. This grading will be "by others".

H.P. = HIGH POINT

PLAN	BY	Date
CHECKED	MDK	10/92
CHECKED		

DRAWING NAME: 34-92418-1 BW06 EASM1
LOCATION: E4 #339
CENTER COORDINATES:
ROTATION ANGLE:
DATE LAST WORKED ON: OCT. 09, 1992
SPECIAL INSTRUCTIONS:

MICHAEL D. SCHOMMER LICENSED 6778 KANSAS PROFESSIONAL ENGINEER

No.	Revision	By	Date

LATERAL 35, MAIN 12 OF THE
SOUTHWEST INTERCEPTOR SEWER

EASEMENT GRADING

MICHAEL E. LINDEBAK, P.E. - CITY ENGINEER
CITY OF WICHITA PROJECT NO. 468-76 245-82214-000-000-001

PROFESSIONAL ENGINEERING CONSULTANTS, P.A.
ENGINEERS
WICHITA, KANSAS

Designed by: MDS, MDK	Job No. 34-92418-1	Sht 3 of 12
Drawn by: GW	Date: SEPTEMBER, 1992	

BRIARWOOD ESTATES 6TH ADDITION

TO WICHITA, SEDGWICK COUNTY, KANSAS



EXISTING RESERVE "E" IN
BRIARWOOD ESTATES 4TH ADDITION TO
WICHITA, SEDGWICK COUNTY, KANSAS

PLAT

LATERAL 35, MAIN 12 OF THE
SOUTHWEST INTERCEPTOR SEWER

PLAT

PROFESSIONAL ENGINEERING CONSULTANTS, P.A.

12

MDK 10/1/92

PLAN
SURVEYED
PLOTTED
ALIGNMENT CHECKED
PROFILE CHECKED
NOTE BOOK
NO.

Sta. 0+00.0
Exist. Concrete MH
Connect new 8" PVC Pipe
to exist. 8" PVC Stub.
(See General Notes, sht. no. 2)

Sta. 1+13.0
Const. MH 1
Shallow MH
Type P or C

Sta. 3+05.3
Const. MH 2
Shallow MH
Type P or C

SCALE:
PLAN: LAT. & LONG. 0 40 80
PROFILE: HORIZ. SAME AS ABOVE
VERT.

BRIARWOOD

HOMEOWNERS ASSOCIATION

CAUTION !!
Proposed 24" RCP
Storm Water Sewer
(by others)

Edge of water

8" PVC Sanitary Sewer

Conc. Sidewalk

Existing SS MH

Sprinkler Head

Not a Problem

0.83'

BRIARWOOD

15.32'

17°44'18"

39°51'

15'

50'

Sta. 2+77.3 to Sta. 2+97.3
Const. 20 L.F. Reinforced
Conc. Encasement on
8" Sanitory Sewer

ESTATES

6TH ADDITION

RESERVE "A"

ALDERNY COURT

Install 113.0 L.F.
8" PVC Pipe.

Install 192.3 L.F.
8" PVC Pipe.

Install 1-4" stub and plug.

5' Storm Drain Util. Esm't

℄ 10' Util. Esm't

℄ 20' Util. Esm't

Line No. 2
See this sheet

Sta. 1+13.0, Line No. 1 =
Sta. 0+00.0, Line No. 2
MH 1

Sta. 2+52.6
Const. MH 3
Standard MH

Sta. 4+49.6
Const. MH 4
Standard MH

ALDERNY COURT

T.V. Boxes to be removed by Multimedia Cablevision. (Typ)

Install 1-4" stub and plug

Buried TV Cable to be removed or abandoned by Multimedia Cablevision (Typ)

Buried Cable TV (Multimedia)

T.V. Box

℄ 10' Util. Esm't

℄ 20' Util. Esm't

Storm Drain Util. Esm't

Existing SS MH

Sprinkler Head

4 Pear

Conc. Sidewalk

8" PVC Sanitary Sewer

Install 259.6 L.F. 8" PVC Pipe.

Install 120.0 L.F. 8" PVC Pipe.

Line No. 1
See this sheet

PSC

MICHAEL D. SCHLAGER
LICENSED
8328
KANSAS
PROFESSIONAL ENGINEER

MDK 10/9/92

PROFILE
S.C.
G.R.A.
H.A.
STRUC.
NOTE BOOK
NO.
DATE

LINE NO. 1

Existing MH
Top Elev.=146.93

MH 1
Top Elev.=142.70

18"Ø RCP 20' Reinforced
E=138.83
MH 2
Top Elev.=141.70

Proposed Ground

Existing Ground

Concrete Encasement

E IN=141.33
from Line No. 2

E IN=142.14
from 1-4" Stub (N)

E OUT=140.23
E IN=140.09

E=141.19

E=141.23

E=141.49

E=141.09

113.0 L.F. 8" PVC Pipe @ 0.30%

192.3 L.F. 8" PVC Pipe @ 0.30%

LINE NO. 2

Water Surface Elev.=139.4
(Aug. 31, 1922)

MH 1
Top Elev.=142.70

MH 3
Top Elev.=145.04

MH 4
Top Elev.=151.00

Proposed Ground

Existing Ground

E IN=145.01
from 2-4" Stubs
(NE & NW)

E=141.33
E IN=141.23

E=141.63

E=141.93

E=142.11

E=142.23

E=142.53

E=142.68

259.6 L.F. 8" PVC Pipe @ 0.30%

120.0 L.F. 8" PVC Pipe @ 0.30%

PROFILE
H. 1"=40'
V. 1"=4'

PLATE 1 PLAN PROFILE U. P. R. & R. I. STANDARD
EUGENE DIETZGEN CO.

PROFESSIONAL ENGINEERING CONSULTANTS, P.A.
ENGINEERS
WICHITA, KANSAS

Designed by: MDK, MDB
Drawn by: JLH

Job No. 34-92618-1
Date September, 1992

LATERAL 35, MAIN 12, OF THE
SOUTHWEST INTERCEPTOR SEWER

LINE NO. 1 AND 2

MICHAEL E. LINDEBAK, P.E. - CITY ENGINEER
CITY OF WICHITA, PROJECT NO. 468-76-245 82214-000-000-100

Sht. 5 of 12

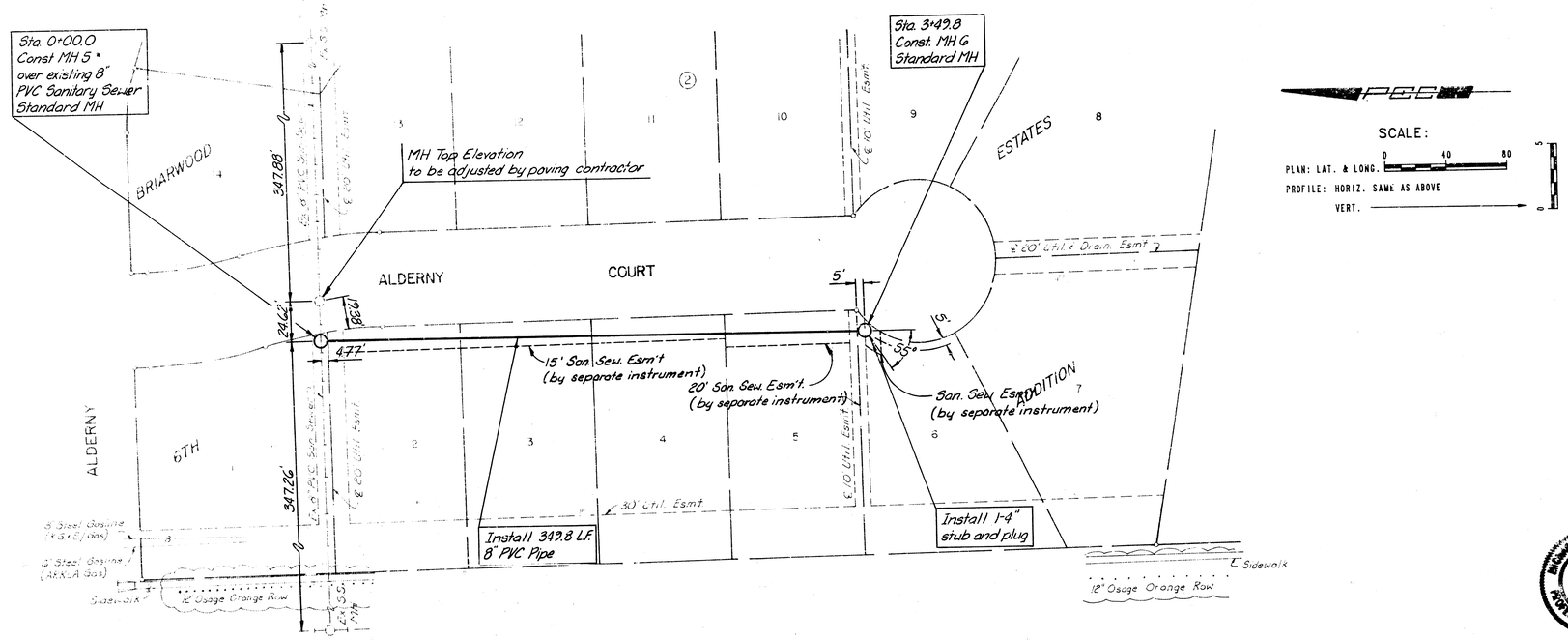

* PRIOR TO BEGINNING CONSTRUCTION OF LINE NO. 3, THE CONTRACTOR SHALL VERIFY THE HORIZONTAL AND VERTICAL LOCATION OF THE EXISTING 8" SANITARY SEWER AT STA. 0+00.0. THE CONTRACTOR SHALL NOTIFY THE ENGINEER IF FIELD INFORMATION DIFFERS FROM PLAN INFORMATION SO THAT ANY PLAN MODIFICATIONS MAY BE MADE.

LINE NO. 3

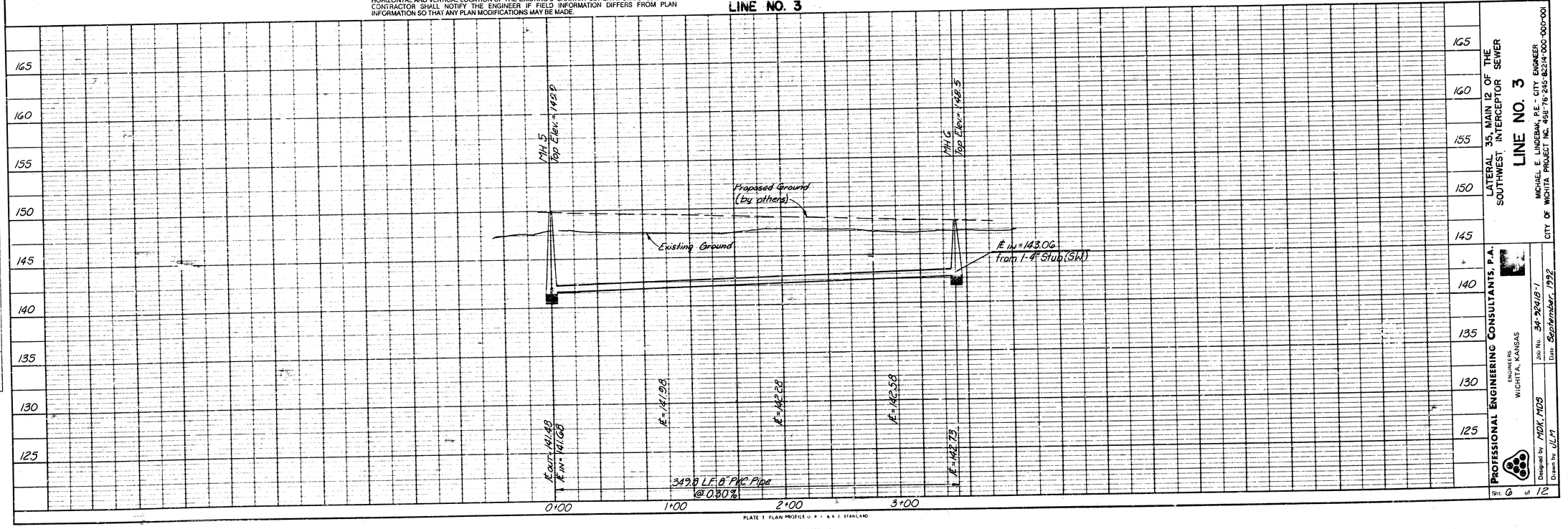

PLATE 1 PLAN PROFILE O. P. & R. E. STANDARD

EUGENE DIETZGEN CO.

LATERAL 35, MAIN 12 OF THE SOUTHWEST INTERCEPTOR SEWER

LINE NO. 3

MICHAEL E. LINDEBAK, P.E. - CITY ENGINEER
CITY OF WICHITA PROJECT NO. 468-76-245-82214-000-000-001

PROFESSIONAL ENGINEERING CONSULTANTS, P.A.
ENGINEERS
WICHITA, KANSAS

Designed by MDK, MDS
Drawn by JLM
Job No. 34-92418-1
Date September, 1992

Sht. 6 of 12

PLAN — NOTE BOOK NO. — SURVEYED — PLOTTED — ALIGNMENT CHECKED — RY OF WAY CHECKED — BY — DATE — MDK 10/9/92

PROFILE — NOTE BOOK NO. — SURVEYED — PLOTTED — GRADES CHECKED — B. M. NOTED — STRUCTURE NOTES CHKD — BY — DATE — MDK 10/9/92

SEWER APPURTENANCES DETAILS
ADOPTED AS STANDARD DESIGN
BY
CITY OF WICHITA

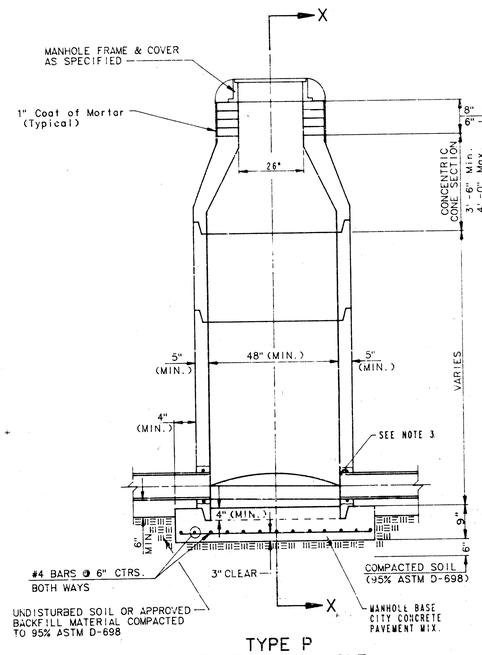

TYPE P
STANDARD MANHOLE

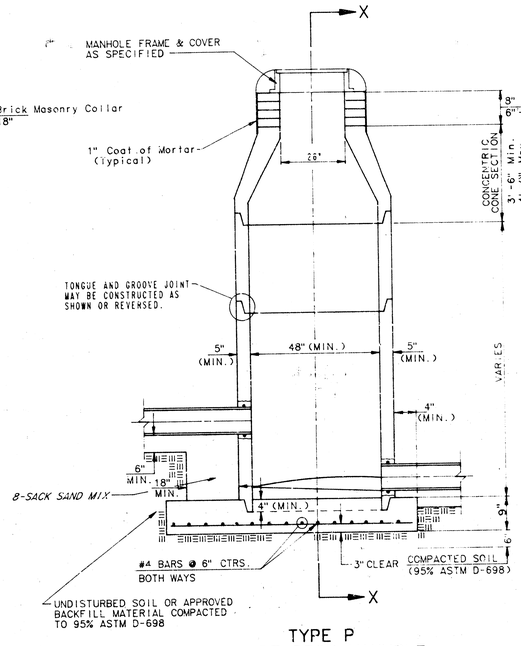

TYPE P
INSIDE DROP MANHOLE

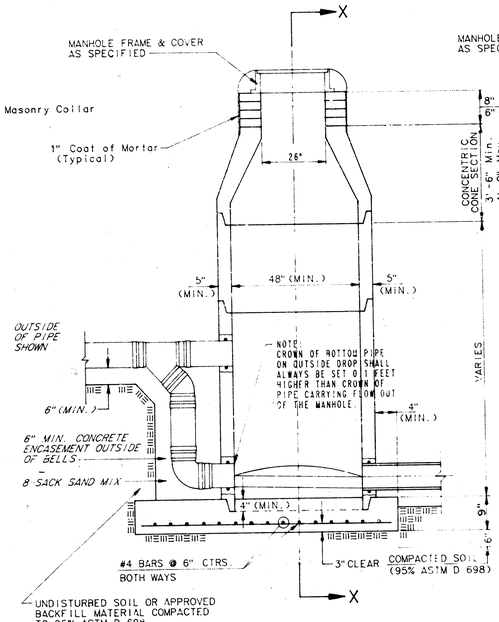

TYPE P
OUTSIDE DROP MANHOLE

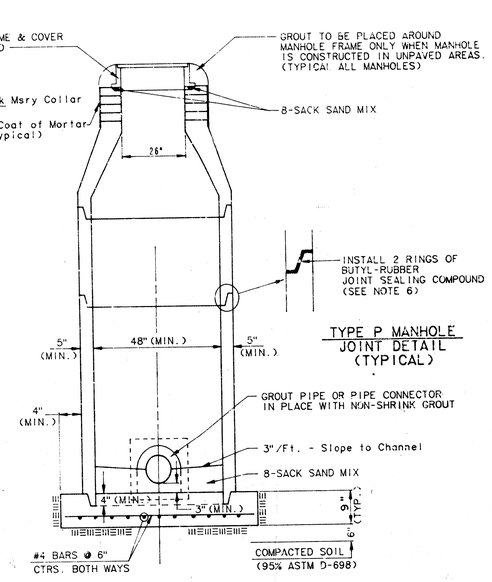

TYPE P MANHOLE
JOINT DETAIL
(TYPICAL)

SECTION X
(TYPICAL)

GENERAL NOTES

PRECAST MANHOLE NOTES

1. ALL PRECAST CONCRETE MANHOLE SECTIONS SHALL CONFORM TO THE LATEST REVISION OF A.S.T.M. C478 AS MODIFIED BY THE SPECIFICATIONS.
2. NON-SHRINK GROUT SHALL BE NON-METALLIC TYPE.
3. APPROVED FLEXIBLE WATERSTOP GASKETS SHALL BE INSTALLED TO JOIN THE SEWER TO THE MANHOLE WALL WHEN A.B.S. COMPOSITE PIPE OR P.V.C. PIPE IS USED. FOR OTHER TYPES OF PIPE THE SEWER SHALL BE GROUTED IN PLACE WITH NON-SHRINK GROUT. THE SEWER PIPE SHALL BE SUPPORTED WITH CONCRETE ENCASEMENT A MINIMUM OF 2 FEET FROM THE MANHOLE WALL AND TO THE FIRST JOINT FOR V.C.P. SUCH THAT THE JOINT REMAINS FLEXIBLE.
4. ALL INSIDE SURFACES OF THE CONCRETE MANHOLE WHICH WOULD BE EXPOSED TO SEWER GAS SHALL BE COATED WITH 2 COATS TNEMEC SERIES 66 HI-BUILD EPOXOLINE, DRY THICKNESS OF 8 MILS (MIN.)
5. EXTERIOR MANHOLE WALLS SHALL BE COATED WITH 1 COAT MOBILARMA 633 BITUMINUS COATING.
6. JOINT SEALING COMPOUND SHALL BE KENT SEAL NO. 2 OR APPROVED EQUAL.
7. PRECAST MANHOLES SHALL BE SET AT LEAST 4 INCHES INTO THE MANHOLE BASE.
8. TOP OF MANHOLE FLOOR SLAB SHALL BE AT LEAST 3 INCHES BELOW THE FLOW LINE OF THE OUTLET PIPE TO INSURE SUFFICIENT MINIMUM THICKNESS OF SHAPED INVERT.
9. LIFTING HOLES SHALL BE FILLED WITH NON-SHRINK GROUT AND THE INTERIOR SURFACE COATED AS SPECIFIED
10. MORTAR USED IN MASONRY CONSTRUCTION SHALL CONTAIN 8 SACKS OF CEMENT PER CUBIC YARD. CONCRETE USED IN MANHOLE BASES SHALL CONFORM TO THE REQUIREMENTS OF CONCRETE FOR CONCRETE PAVEMENT CONSTRUCTION AS SPECIFIED IN THE CITY STANDARD PAVING SPECIFICATIONS USING CITY CONCRETE PAVEMENT MIX WITHOUT AIR ENTRAINING ADMIXTURE. MORTAR SHALL BE PLACED AROUND THE MANHOLE RING AS SHOWN ON THE DRAWINGS WHEN MANHOLES ARE CONSTRUCTED IN UNPAVED AREAS. MANHOLES CONSTRUCTED WHERE PIPE SIZES ARE SMALLER THAN 24" SHALL HAVE AN INSIDE DIAMETER OF 4'. MANHOLES CONSTRUCTED WHERE PIPE SIZES ARE 24" OR LARGER SHALL HAVE AN INSIDE DIAMETER OF 5'. COMPLETED MANHOLE SHALL BE WITHOUT LEAKS AND WATER TIGHT.
11. REINFORCING STEEL SHALL BE INSTALLED IN THE MANHOLE BASES AND SHALL CONSIST OF NO. 4 BARS PLACED ON 6" CENTERS IN BOTH DIRECTIONS. THE MANHOLE BASE REINFORCEMENT SHALL BE PLACED AT LEAST 3" ABOVE THE BOTTOM OF THE MANHOLE BASE. ALL COSTS FOR FURNISHING AND INSTALLING REINFORCING STEEL SHALL BE INCLUDED IN THE UNIT PRICE BID FOR THE MANHOLE.
12. OPENINGS SHALL BE CUT INTO THE MANHOLE WALL WHEN OUTSIDE DROPS ARE CONSTRUCTED ON EXISTING MANHOLES. SUCH OPENINGS CUT INTO EXISTING MANHOLES SHALL BE AS SMALL AS PRACTICAL TO FACILITATE INSTALLING AND GROUTING THE NEW PIPE IN PLACE. WATERSTOP GASKETS SHALL BE USED WITH P.V.C. AND A.B.S. COMPOSITE PIPE. THE NEW PIPE SHALL BE GROUTED INTO THE OPENING USING AN APPROVED NONSHRINK GROUT FOR THE FULL MANHOLE WALL THICKNESS. THE EXTERIOR OF THE COMPLETED CONNECTION SHALL BE SEALED WITH AN APPROVED BITUMINOUS COATING SUCH THAT THE CONNECTION WILL BE WATER TIGHT. FLOOR OF MANHOLE SHALL BE MODIFIED TO FORM NEW FLOW CHANNEL FOR THE NEW CONNECTION AS INDICATED BY THE DRAWING. THIS WORK, INCLUDING MODIFICATION OF MANHOLE FLOOR, SHALL BE PAID FOR AT THE UNIT PRICE BID FOR OUTSIDE DROP STACK CONSTRUCTED ON EXISTING MANHOLE.
13. THE FLOORS OF ALL MANHOLES SHALL BE SHAPED WITH FLOW CHANNELS SUCH THAT THE MANHOLES WILL BE SELF CLEANING AND FREE OF AREAS WHERE SOLIDS COULD BE DEPOSITED AS SEWAGE FLOWS THROUGH THE MANHOLE FROM ALL INLET PIPES TO THE OUTLET PIPE. FLOW CHANNELS SHALL BE FORMED TO MATCH THE BOTTOM HALVES OF THE INFLOWING PIPES AND THE OUTFLOWING PIPE AS SHOWN BY THE DRAWINGS EXCEPT FOR INSIDE DROP MANHOLES. FLOW CHANNELS FOR INSIDE DROP MANHOLES SHALL BE CONSTRUCTED AS INDICATED BY THE DRAWING. MANHOLE FLOORS SHALL HAVE SLOPES OF 3 INCHES PER FOOT IN THE AREAS OUTSIDE OF THE FLOW CHANNELS SLOPED TOWARD THE FLOW CHANNELS. PIPES LAID THROUGH MANHOLES SHALL HAVE THE TOP HALF REMOVED TO NEAT LINES FOR THE FULL INSIDE DIAMETER OF THE MANHOLE. MANHOLE FLOORS SHALL THEN BE SHAPED AROUND THE BOTTOM HALF OF THE PIPE WHICH FORMS THE FLOW CHANNEL.
14. PIPES INSTALLED WITHIN THE EXCAVATION MADE FOR THE MANHOLE SHALL BE CRADLED WITH CONCRETE TO THE LIMITS OF THE MANHOLE EXCAVATION. WHEN CLAY PIPE IS USED, THE CRADLE SHALL EXTEND TO THE FIRST JOINT OUTSIDE THE MANHOLE. THE CRADLE SHALL BE TERMINATED AT THE CLAY PIPE JOINT IN A MANNER WHICH WILL MAINTAIN THE FLEXIBILITY OF THE JOINT. COST OF CRADLE WITHIN MANHOLE EXCAVATION OR TO CLAY PIPE JOINTS ADJACENT TO MANHOLE SHALL BE INCLUDED IN THE UNIT PRICE BID FOR THE MANHOLE.
15. MANHOLE COVER CASTINGS AND MANHOLE FRAME CASTINGS SHALL CONFORM TO THE REQUIREMENTS AS INDICATED IN THE STANDARD SPECIFICATIONS AND AS SHOWN IN THE STANDARD DETAIL DRAWING.
16. THE VERTICAL FREE FALL DROP INSIDE MANHOLES SHALL NOT EXCEED 2'.

    THE CROWNS OF INFLOWING PIPES SHALL NEVER BE SET LOWER THAN THE CROWN OF THE OUTFLOWING PIPE.
17. STANDARD MANHOLES AND STANDARD INSIDE DROP MANHOLES SHALL BE BID AS STANDARD MANHOLES FOR THE TYPE AND DIAMETER INDICATED. OUTSIDE DROP MANHOLES SHALL BE BID AS STANDARD OUTSIDE DROP MANHOLES FOR THE TYPE AND DIAMETER INDICATED. ALL MANHOLE DIAMETERS WILL BE 4' UNLESS INDICATED OTHERWISE.
18. A BRICK MASONRY COLLAR SHALL BE INSTALLED BETWEEN THE CAST IRON FRAME AND THE CONCENTRIC CONE. THE COLLAR WILL HAVE 6" WALLS AND A VERTICAL HEIGHT OF 8" MINIMUM AND 18" MAXIMUM. A 1" COAT OF MORTAR WILL BE PLASTERED ON THE OUTSIDE OF THE COLLAR.

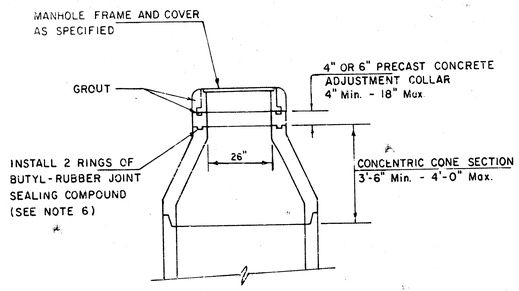

ALTERNATE CONSTRUCTION
IN UNPAVED AREAS

NOTE NO. 16 REVISED JAN. 1991
Revised 3-21-89
Revised 8-10-88
Revised June 12, 1985

Sht. 7 of 12

SEWER APPURTENANCES DETAILS

ADOPTED AS STANDARD DESIGN
BY

City of Wichita, Kansas

STANDARD MANHOLE TYPE "C"

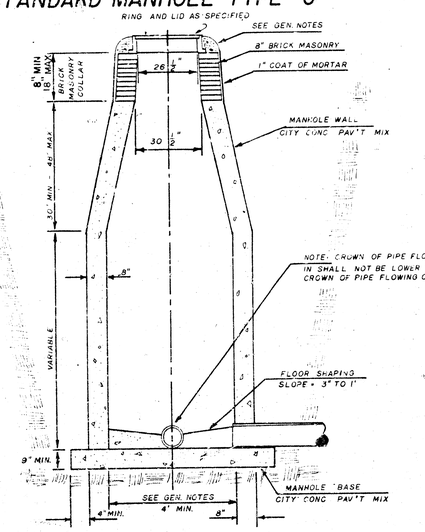

INSIDE DROP MANHOLE TYPE "C"

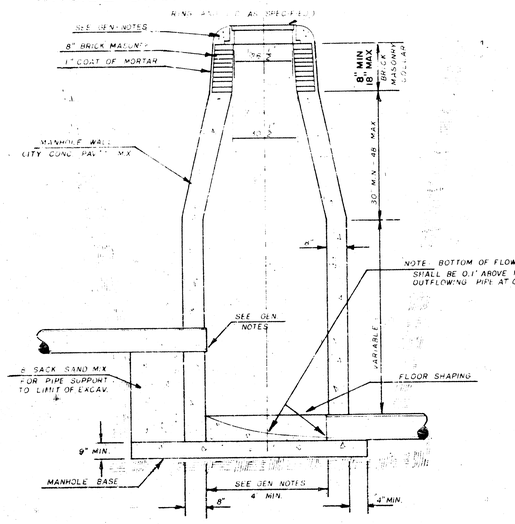

OUTSIDE DROP MANHOLE TYPE "C"

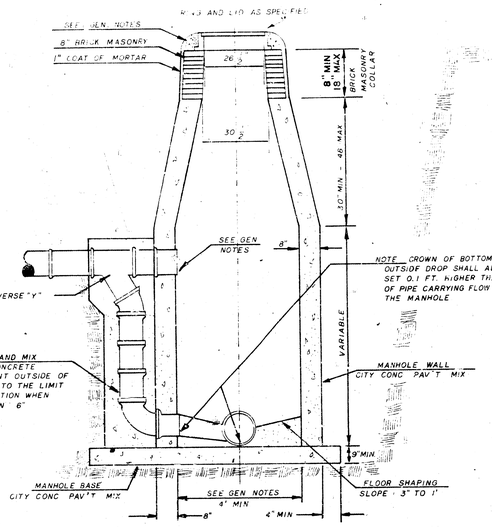

GENERAL NOTES

1. MORTAR USED IN MASONRY CONSTRUCTION SHALL CONTAIN 6 SACKS OF CEMENT PER CUBIC YARD. CONCRETE USED IN MANHOLE WALLS AND BASES SHALL CONFORM TO THE REQUIREMENTS OF CONCRETE FOR CONCRETE PAVEMENT CONSTRUCTION AS SPECIFIED IN THE CITY STANDARD PAVING SPECIFICATIONS USING CITY CONCRETE PAVEMENT MIX WITHOUT AIR ENTRAINING ADMIXTURE. MORTAR SHALL BE PLACED AROUND THE MANHOLE RING AS SHOWN ON THE DRAWINGS WHEN MANHOLES ARE CONSTRUCTED IN UNPAVED AREAS. TYPE "C" MANHOLES CAN BE CONSTRUCTED ONLY WHERE PIPE SIZES ARE 8" OR SMALLER. THE INSIDE DIAMETER OF TYPE "C" MANHOLES SHALL BE 4'. COMPLETED MANHOLE SHALL BE WITHOUT LEAKS AND WATER TIGHT.

2. REINFORCING STEEL SHALL BE INSTALLED IN THE MANHOLE BASE. REINFORCING STEEL SHALL CONSIST OF NO. 4 BARS PLACED ON 6" CENTERS IN BOTH DIRECTIONS. REINFORCING STEEL SHALL BE PLACED 6" ABOVE THE BOTTOM OF THE MANHOLE BASE. COST OF FURNISHING AND INSTALLING REINFORCING STEEL SHALL BE INCLUDED IN THE UNIT PRICE BID FOR THE MANHOLE.

3. AN OPENING SHALL BE CUT IN THE MANHOLE WALL FOR THE UPPER INLET PIPE FOR INSIDE AND OUTSIDE DROP MANHOLES. THE UPPER INLET PIPE SHALL BE GROUTED INTO THIS OPENING WITH NON-SHRINK GROUT. THE EXTERIOR OF THIS COMPLETED CONNECTION SHALL BE SEALED WITH AN APPROVED BITUMINOUS COATING SUCH THAT THE CONNECTION WILL BE WATER TIGHT.

4. THE FLOORS OF ALL MANHOLES SHALL BE SHAPED WITH FLOW CHANNELS SUCH THAT THE MANHOLES WILL BE SELF CLEANING AND FREE OF AREAS WHERE SOLIDS COULD BE DEPOSITED AS SEWAGE FLOWS THROUGH THE MANHOLE FROM ALL INLET PIPES TO THE OUTLET PIPE. FLOW CHANNELS SHALL BE FORMED TO MATCH THE BOTTOM HALVES OF THE INFLOWING PIPES AND THE OUTFLOWING PIPE AS SHOWN BY THE DRAWINGS EXCEPT FOR INSIDE DROP MANHOLES. FLOW CHANNELS FOR INSIDE DROP MANHOLES SHALL BE CONSTRUCTED AS INDICATED BY THE DRAWINGS. MANHOLE FLOORS SHALL HAVE SLOPES OF 1 INCH PER FOOT IN THE AREAS OUTSIDE OF THE FLOW CHANNELS SLOPED TOWARD THE FLOW CHANNELS. PIPES LAID THROUGH MANHOLE SHALL HAVE THE TOP HALF REMOVED TO SEAT LINES FOR THE FULL INSIDE DIAMETER OF THE MANHOLE. MANHOLE FLOORS SHALL THEN BE SHAPED AROUND THE BOTTOM HALF OF THE PIPE WHICH FORMS THE FLOW CHANNEL.

5. PIPES INSTALLED WITHIN THE EXCAVATION MADE FOR THE MANHOLE SHALL BE CRADLED WITH CONCRETE TO THE LIMITS OF THE MANHOLE EXCAVATION. WHEN CLAY PIPE IS USED, THE CRADLE SHALL EXTEND TO THE FIRST JOINT OUTSIDE THE MANHOLE. THE CRADLE SHALL BE TERMINATED AT THE [illegible] IN A MANNER WHICH WILL MAINTAIN THE INTEGRITY OF THE [illegible] OF CRADLE WITHIN MANHOLE EXCAVATION OR TO [illegible] TO MANHOLE SHALL BE INCLUDED IN THE UNIT PRICE [illegible]

6. MANHOLE COVER CASTINGS AND MANHOLE FRAMES [illegible] THE REQUIREMENTS AS INDICATED ON THE [illegible] SHOWN IN THE STANDARD DETAIL DRAWINGS.

7. THE VERTICAL **FREE FALL DROP INSIDE MANHOLES SHALL NOT EXCEED 2'.**

[illegible] THE CROWNS OF INFLOWING PIPE [illegible] THAN THE CROWN OF THE OUTFLOWING PIPE.

9. STANDARD MANHOLES TYPE "C" AND STANDARD [illegible] SHALL BE BID AS STANDARD MANHOLES FOR [illegible] PIPES. OUTSIDE DROP MANHOLES TYPE "C" [illegible] FOR DROP MANHOLES FOR THE TYPE AND [illegible] DIAMETERS ARE 8" UNLESS INDICATED [illegible]

UNL JAN. 1982

NOTE NO. 7 REVISED JAN 1991 Sht. 8 of 12

SEWER APPURTENANCES DETAILS

ADOPTED AS STANDARD DESIGN
BY

CITY OF WICHITA, KANSAS

TYPE "D" MANHOLE

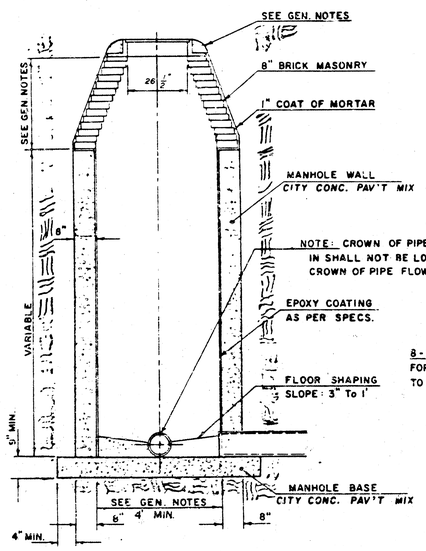

TYPE "D" INSIDE DROP MANHOLE

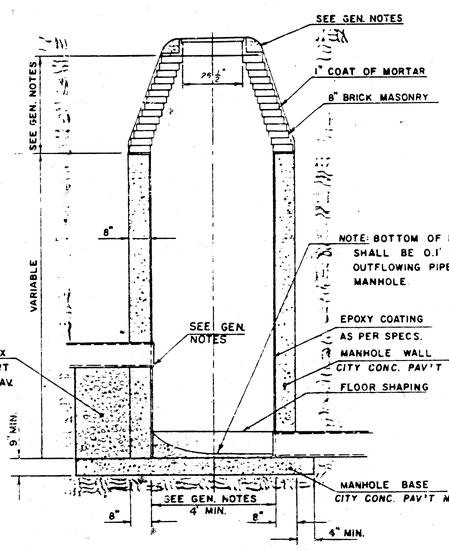

TYPE "D" OUTSIDE DROP MANHOLE

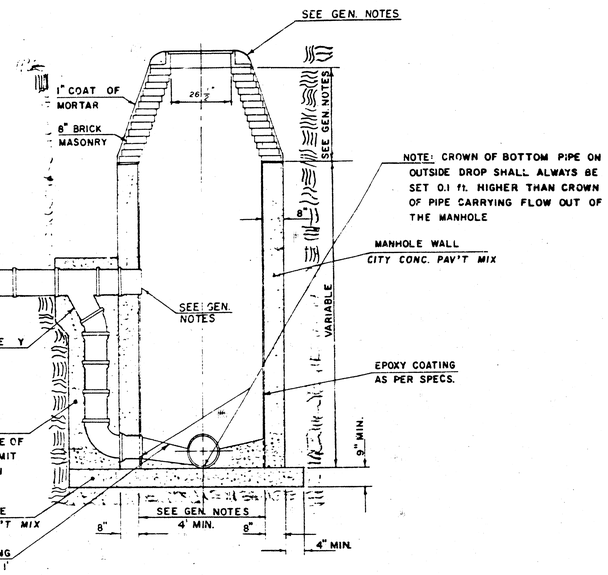

GENERAL NOTES

1. MORTAR USED IN MASONRY CONSTRUCTION SHALL CONTAIN 6 SACKS OF CEMENT PER CUBIC YARD. CONCRETE USED IN MANHOLE WALLS AND BASES SHALL CONFORM TO THE REQUIREMENTS OF CONCRETE FOR CONCRETE PAVEMENT CONSTRUCTION AS SPECIFIED IN THE CITY STANDARD PAVING SPECIFICATIONS USING CITY CONCRETE PAVEMENT MIX WITHOUT AIR ENTRAINING ADMIXTURE. MORTAR SHALL BE PLACED AROUND THE MANHOLE RING AS SHOWN ON THE DRAWINGS WHEN MANHOLES ARE CONSTRUCTED IN UNPAVED AREAS.

   ALL INSIDE SURFACES OF THE CONCRETE MANHOLE WALL WHICH WOULD BE EXPOSED TO SEWER GAS SHALL BE PROTECTED BY AN APPROVED EPOXY COATING. TYPE "D" MANHOLES MAY BE USED ON PIPE SIZES 8" TO 36" WHEN THE MANHOLE DEPTH EXCEEDS THE REQUIRED CORBEL HEIGHT BY 1' PLUS THE OUTSIDE DIAMETER OF THE LARGEST PIPE IN THE MANHOLE.

   MANHOLES CONSTRUCTED WHERE PIPE SIZES ARE SMALLER THAN 24" SHALL HAVE A DIAMETER OF 4'. MANHOLES CONSTRUCTED WHERE THE PIPE SIZES ARE 24" OR LARGER SHALL HAVE A DIAMETER OF 5'. THE HEIGHT OF THE CORBELS ON 4' DIAMETER MANHOLES SHALL BE 4' MANHOLES HAVING A DIAMETER OF 5' SHALL HAVE CORBELS 6' IN HEIGHT. COMPLETED MANHOLE SHALL BE WITHOUT LEAKS AND WATER TIGHT.

2. REINFORCING STEEL SHALL BE INSTALLED IN THE MANHOLE BASE. REINFORCING STEEL SHALL CONSIST OF NO. 4 BARS PLACED ON 6" CENTERS IN BOTH DIRECTIONS. REINFORCING STEEL SHALL BE PLACED 6" ABOVE THE BOTTOM OF THE MANHOLE BASE. COST OF FURNISHING AND INSTALLING REINFORCING STEEL SHALL BE INCLUDED IN THE UNIT PRICE BID FOR THE MANHOLE.

3. AN OPENING SHALL BE CUT IN THE MANHOLE WALL FOR THE UPPER INLET PIPE FOR INSIDE AND OUTSIDE DROP MANHOLES. THE UPPER INLET PIPE SHALL BE GROUTED INTO THIS OPENING WITH NON-SHRINK GROUT. THE EXTERIOR OF THIS COMPLETED CONNECTION SHALL BE SEALED WITH AN APPROVED BITUMINOUS COATING SUCH THAT THE CONNECTION WILL BE WATER TIGHT. THE INTERIOR PLASTIC LINING SHALL BE SEALED AROUND THE INLET PIPE OPENING IN SUCH A MANNER THAT WILL EFFECTIVELY MAINTAIN THE INTEGRITY OF THE PROTECTIVE PLASTIC LINER.

4. THE FLOORS OF ALL MANHOLES SHALL BE SHAPED WITH FLOW CHANNELS SUCH THAT THE MANHOLES WILL BE SELF CLEANING AND FREE OF AREAS WHERE SOLIDS COULD BE DEPOSITED AS SEWAGE FLOWS THROUGH THE MANHOLE FROM ALL INLET PIPES TO THE OUTLET PIPE. FLOW CHANNELS SHALL BE FORMED TO MATCH THE BOTTOM HALVES OF THE INFLOWING PIPES AND THE OUTFLOWING PIPE AS SHOWN BY THE DRAWINGS EXCEPT FOR INSIDE DROP MANHOLES. FLOW CHANNELS FOR INSIDE DROP MANHOLES SHALL BE CONSTRUCTED AS INDICATED BY THE DRAWING. MANHOLE FLOORS SHALL HAVE SLOPES OF 3 INCHES PER FOOT IN THE AREAS OUTSIDE OF THE FLOW CHANNELS SLOPED TOWARD THE FLOW CHANNELS. PIPES LAID THROUGH MANHOLES SHALL HAVE THE TOP HALF REMOVED TO NEAT LINES FOR THE FULL INSIDE DIAMETER OF THE MANHOLE. MANHOLE FLOORS SHALL THEN BE SHAPED AROUND THE BOTTOM HALF OF THE PIPE WHICH FORMS THE FLOW CHANNEL.

5. PIPES INSTALLED WITHIN THE EXCAVATION MADE FOR THE MANHOLE SHALL BE CRADLED WITH CONCRETE TO THE LIMITS OF THE MANHOLE EXCAVATION. WHEN CLAY PIPE IS USED, THE CRADLE SHALL EXTEND TO THE FIRST JOINT OUTSIDE THE MANHOLE. THE CRADLE SHALL BE TERMINATED AT THE CLAY PIPE JOINT IN A MANNER WHICH WILL MAINTAIN THE FLEXIBILITY OF THE JOINT. COST OF CRADLE WITHIN MANHOLE EXCAVATION OR TO CLAY PIPE JOINTS ADJACENT TO MANHOLE SHALL BE INCLUDED IN THE UNIT PRICE BID FOR THE MANHOLE.

6. MANHOLE COVER CASTINGS AND MANHOLE FRAME CASTINGS SHALL CONFORM TO THE REQUIREMENTS AS INDICATED IN THE STANDARD SPECIFICATIONS AND AS SHOWN IN THE STANDARD DETAIL DRAWING.

7. THE VERTICAL FREE FALL DROP INSIDE MANHOLES SHALL NOT EXCEED 2'.

   THE CROWNS OF INFLOWING PIPES SHALL NEVER BE SET LOWER THAN THE CROWN OF THE OUTFLOWING PIPE.

8. STANDARD MANHOLES TYPE "D" AND STANDARD INSIDE DROP MANHOLES TYPE "D" SHALL BE BID AS STANDARD MANHOLES FOR THE TYPE AND DIAMETER INDICATED. OUTSIDE DROP MANHOLES TYPE "D" SHALL BE BID AS STANDARD OUTSIDE DROP MANHOLES FOR THE TYPE AND DIAMETER INDICATED. ALL MANHOLE DIAMETERS WILL BE 4' UNLESS INDICATED OTHERWISE.

NOTE: EPOXY COATING ON INTERIOR CONCRETE SURFACES MAY BE DELETED WHEN TYPE "D" MANHOLES ARE CONSTRUCTED ON SEWERS WITH DIAMETERS SMALLER THAN 10".

NOTE NO. 7 REVISED JAN. 1991

APRIL 1987

SEWER APPURTENANCES DETAILS

ADOPTED AS STANDARD DESIGN
BY
CITY OF WICHITA

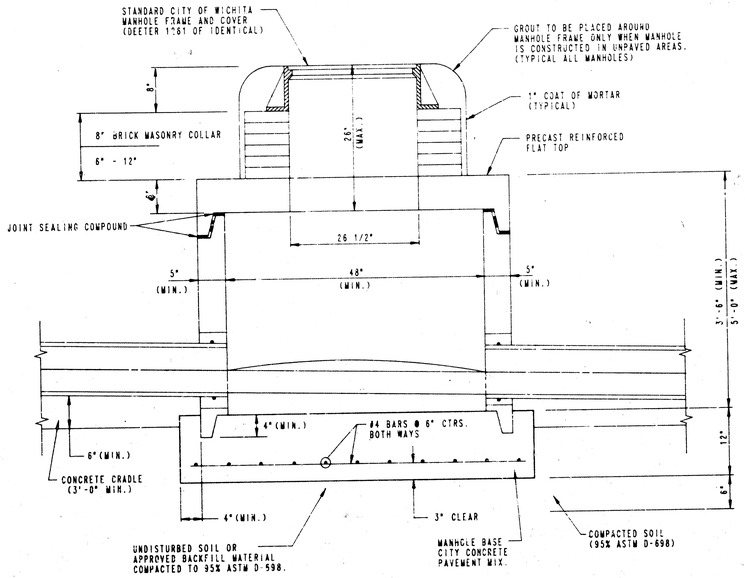

TYPE P
SHALLOW MANHOLE
(PRECAST)

PRECAST MANHOLE NOTES

1. ALL PRECAST CONCRETE MANHOLE SECTIONS SHALL CONFORM TO THE LATEST REVISION OF A.S.T.M. C478 AS MODIFIED BY THE SPECIFICATIONS.
2. APPROVED FLEXIBLE WATERSTOP GASKETS SHALL BE INSTALLED TO JOIN THE SEWER TO THE MANHOLE WALL WHEN PLASTIC PIPE IS USED. FOR OTHER TYPES OF PIPE THE SEWER SHALL BE GROUTED IN PLACE WITH NON-SHRINK GROUT.
3. NON-SHRINK GROUT SHALL BE NON-METALLIC [illegible]
4. PIPES INSTALLED WITHIN THE EXCAVATION [illegible] SHALL BE CRADLED WITH CONCRETE TO THE [illegible] EXCAVATION (3' MIN.). WHEN CLAY PIPE [illegible] SHALL EXTEND TO THE FIRST JOINT OUTSIDE THE MANHOLE (3' MIN.). THE CRADLE SHALL BE TERMINATED AT THE CLAY PIPE JOINT IN A MANNER WHICH WILL MAINTAIN THE FLEXIBILITY OF THE JOINT. COST OF CRADLE WITHIN MANHOLE EXCAVATION OR TO CLAY PIPE JOINTS ADJACENT TO MANHOLE SHALL BE INCLUDED IN THE UNIT PRICE BID FOR THE MANHOLE.
5. ALL INSIDE SURFACES OF THE CONCRETE [illegible] EXPOSED TO SEWER GAS SHALL BE COATED [illegible] SERIES 66 HI-BUILD EPOXOLINE, DRY THICK.
6. EXTERIOR MANHOLE WALLS SHALL BE COATED WITH [illegible] 633 BITUMINOUS COATING.
7. JOINT SEALING COMPOUND SHALL BE KENT SEAL NO. 2 OR APPROVED EQUAL.
8. PRECAST MANHOLES SHALL BE SET AT LEAST 4 INCHES INTO THE MANHOLE BASE.
9. TOP OF MANHOLE FLOOR SLAB SHALL BE AT LEAST 3 INCHES BELOW THE FLOW LINE OF THE OUTLET PIPE TO INSURE SUFFICIENT MINIMUM THICKNESS OF SHAPED INVERT.
10. LIFTING HOLES SHALL BE FILLED WITH NON-SHRINK GROUT AND THE INTERIOR SURFACE COATED AS SPECIFIED.
11. MORTAR USED IN MASONRY CONSTRUCTION SHALL CONTAIN 6 SACKS OF CEMENT PER CUBIC YARD. CONCRETE USED IN MANHOLE BASES SHALL CONFORM TO THE REQUIREMENTS OF CONCRETE FOR CONCRETE PAVEMENT CONSTRUCTION AS SPECIFIED IN THE CITY STANDARD PAVING SPECIFICATIONS USING CITY CONCRETE PAVEMENT MIX WITHOUT AIR ENTRAINING ADMIXTURE. MORTAR SHALL BE PLACED AROUND THE MANHOLE RING AS SHOWN ON THE DRAWINGS WHEN MANHOLES ARE CONSTRUCTED IN UNPAVED AREAS. MANHOLES CONSTRUCTED WHERE PIPE SIZES ARE SMALLER THAN 24" SHALL HAVE AN INSIDE DIAMETER OF 4'. MANHOLES CONSTRUCTED WHERE PIPE SIZES ARE 24" OR LARGER SHALL HAVE AN INSIDE DIAMETER OF 5'. COMPLETED MANHOLE SHALL BE WITHOUT LEAKS AND WATER TIGHT.
12. REINFORCING STEEL SHALL BE INSTALLED IN THE MANHOLE BASES AND SHALL CONSIST OF NO. 4 BARS PLACED ON 6" CENTERS IN BOTH DIRECTIONS. THE MANHOLE BASE REINFORCEMENT SHALL BE PLACED AT LEAST 3" ABOVE THE BOTTOM OF THE MANHOLE BASE. ALL COSTS FOR FURNISHING AND INSTALLING REINFORCING STEEL SHALL BE INCLUDED IN THE UNIT PRICE BID FOR THE MANHOLE.
13. THE FLOORS OF ALL MANHOLES SHALL BE SHAPED WITH FLOW CHANNELS SUCH THAT THE MANHOLES WILL BE SELF CLEANING AND FREE OF AREAS WHERE SOLIDS COULD BE DEPOSITED AS SEWAGE FLOWS THROUGH THE MANHOLE FROM ALL INLET PIPES TO THE OUTLET PIPE. FLOW CHANNELS SHALL BE FORMED TO MATCH THE BOTTOM HALVES OF THE INFLOWING PIPES AND THE OUTFLOWING PIPE AS SHOWN BY THE DRAWINGS. MANHOLE FLOORS SHALL HAVE SLOPES OF 3 INCHES PER FOOT IN THE AREAS OUTSIDE OF THE FLOW CHANNELS SLOPED TOWARD THE FLOW CHANNELS. PIPES LAID THROUGH MANHOLES SHALL HAVE THE TOP HALF REMOVED TO NEAT LINES FOR THE FULL INSIDE DIAMETER OF THE MANHOLE. MANHOLE FLOORS SHALL THEN BE SHAPED AROUND THE BOTTOM HALF OF THE PIPE WHICH FORMS THE FLOW CHANNEL.
14. MANHOLE COVER CASTINGS AND MANHOLE FRAME CASTINGS SHALL CONFORM TO THE REQUIREMENTS AS INDICATED IN THE STANDARD SPECIFICATIONS AND AS SHOWN IN THE STANDARD DETAIL DRAWING.
15. THE CROWNS OF INFLOWING PIPES SHALL NEVER BE SET LOWER THAN THE CROWN OF THE OUTFLOWING PIPE.
16. A BRICK MASONRY COLLAR SHALL BE INSTALLED BETWEEN THE CAST IRON FRAME AND THE PRECAST REINFORCED FLAT TOP. THE COLLAR WILL HAVE 8" WALLS AND A VERTICAL HEIGHT OF 8" MINIMUM AND 18" MAXIMUM. A 1" COAT OF MORTAR WILL BE PLASTERED ON THE OUTSIDE OF THE COLLAR.
17. SHALLOW MANHOLES TYPE "P" SHALL BE BID AS SHALLOW MANHOLES FOR THE TYPE AND DIAMETER INDICATED. ALL MANHOLE DIAMETERS WILL BE 4' UNLESS INDICATED OTHERWISE.

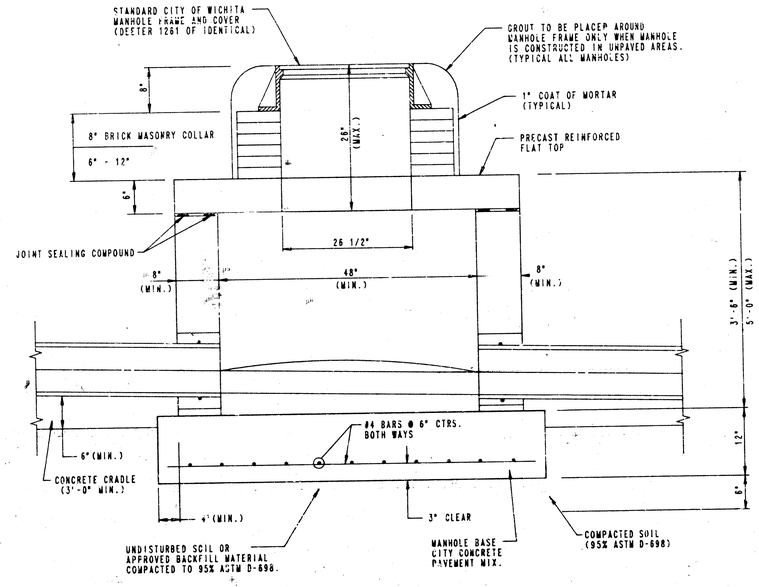

TYPE C
SHALLOW MANHOLE
(CAST-IN-PLACE)

CAST-IN-PLACE MANHOLE NOTES

1. APPROVED FLEXIBLE WATERSTOP GASKETS SHALL BE INSTALLED TO JOIN THE SEWER TO THE MANHOLE WALL WHEN PLASTIC PIPE IS USED. FOR OTHER TYPES OF PIPE THE SEWER SHALL BE GROUTED IN PLACE WITH NON-SHRINK GROUT.
2. NON-SHRINK GROUT SHALL BE NON-METALLIC TYPE.
3. PIPES INSTALLED WITHIN THE EXCAVATION MADE FOR THE MANHOLE SHALL BE CRADLED WITH CONCRETE TO THE LIMITS OF THE MANHOLE EXCAVATION (3' MIN.). WHEN CLAY PIPE IS USED, THE CRADLE SHALL EXTEND TO THE FIRST JOINT OUTSIDE THE MANHOLE (3' MIN.). THE CRADLE SHALL BE TERMINATED AT THE CLAY PIPE JOINT IN A MANNER WHICH WILL MAINTAIN THE FLEXIBILITY OF THE JOINT. COST OF CRADLE WITHIN MANHOLE EXCAVATION OR TO CLAY PIPE JOINTS ADJACENT TO MANHOLE SHALL BE INCLUDED IN THE UNIT PRICE BID FOR THE MANHOLE.
4. JOINT SEALING COMPOUND SHALL BE KENT SEAL NO. 2 OR APPROVED EQUAL.
5. TOP OF MANHOLE FLOOR SLAB SHALL BE AT LEAST 3 INCHES BELOW THE FLOW LINE OF THE OUTLET PIPE TO INSURE SUFFICIENT MINIMUM THICKNESS OF SHAPED INVERT.
6. MORTAR USED IN MASONRY CONSTRUCTION SHALL CONTAIN 8 SACKS OF CEMENT PER CUBIC YARD. CONCRETE USED IN MANHOLE WALLS AND BASES SHALL CONFORM TO THE REQUIREMENTS OF CONCRETE FOR CONCRETE PAVEMENT CONSTRUCTION AS SPECIFIED IN THE CITY STANDARD PAVING SPECIFICATIONS USING CITY CONCRETE PAVEMENT MIX WITHOUT AIR ENTRAINING ADMIXTURE. MORTAR SHALL BE PLACED AROUND THE MANHOLE RING AS SHOWN ON THE DRAWINGS WHEN MANHOLES ARE CONSTRUCTED IN UNPAVED AREAS. TYPE "C" MANHOLES CAN BE CONSTRUCTED ONLY WHERE PIPE SIZES ARE 8" OR SMALLER. THE INSIDE DIAMETER OF TYPE "C" MANHOLES SHALL BE 4'. COMPLETED MANHOLE SHALL BE WITHOUT LEAKS AND WATER TIGHT.
7. REINFORCING STEEL SHALL BE INSTALLED IN THE MANHOLE BASE. REINFORCING STEEL SHALL CONSIST OF NO. 4 BARS PLACED ON 6" CENTERS IN BOTH DIRECTIONS. REINFORCING STEEL SHALL BE PLACED AT LEAST 3" ABOVE THE BOTTOM OF THE MANHOLE BASE. COST OF FURNISHING AND INSTALLING REINFORCING STEEL SHALL BE INCLUDED IN THE UNIT PRICE BID FOR THE MANHOLE.
8. THE FLOORS OF ALL MANHOLES SHALL BE SHAPED WITH FLOW CHANNELS SUCH THAT THE MANHOLES WILL BE SELF CLEANING AND FREE OF AREAS WHERE SOLIDS COULD BE DEPOSITED AS SEWAGE FLOWS THROUGH THE MANHOLE FROM ALL INLET PIPES TO THE OUTLET PIPE. FLOW CHANNELS SHALL BE FORMED TO MATCH THE BOTTOM HALVES OF THE INFLOWING PIPES AND THE OUTFLOWING PIPE AS SHOWN BY THE DRAWINGS. MANHOLE FLOORS SHALL HAVE SLOPES OF 3 INCHES PER FOOT IN THE AREAS OUTSIDE OF THE FLOW CHANNELS SLOPED TOWARD THE FLOW CHANNELS. PIPES LAID THROUGH MANHOLES SHALL HAVE THE TOP HALF REMOVED TO NEAT LINES FOR THE FULL INSIDE DIAMETER OF THE MANHOLE. MANHOLE FLOORS SHALL THEN BE SHAPED AROUND THE BOTTOM HALF OF THE PIPE WHICH FORMS THE FLOW CHANNEL.
9. MANHOLE COVER CASTINGS AND MANHOLE FRAME CASTINGS SHALL CONFORM TO THE REQUIREMENTS AS INDICATED IN THE STANDARD SPECIFICATIONS AND AS SHOWN IN THE STANDARD DETAIL DRAWING.
10. THE CROWNS OF INFLOWING PIPES SHALL NEVER BE SET LOWER THAN THE CROWN OF THE OUTFLOWING PIPE.
11. A BRICK MASONRY COLLAR SHALL BE INSTALLED BETWEEN THE CAST IRON FRAME AND THE PRECAST REINFORCED FLAT TOP. THE COLLAR WILL HAVE 8" WALLS AND A VERTICAL HEIGHT OF 8" MINIMUM AND 18" MAXIMUM. A 1" COAT OF MORTAR WILL BE PLASTERED ON THE OUTSIDE OF THE COLLAR.
12. SHALLOW MANHOLES TYPE "C" SHALL BE BID AS SHALLOW MANHOLES FOR THE TYPE AND DIAMETER INDICATED. ALL MANHOLE DIAMETERS WILL BE 4' UNLESS INDICATED OTHERWISE.

MANHOLE FRAME AND COVER DETAIL

ADOPTED AS STANDARD DESIGN

BY

City of Wichita, Kansas

MANHOLE COVER

Weight: 180 Lbs.

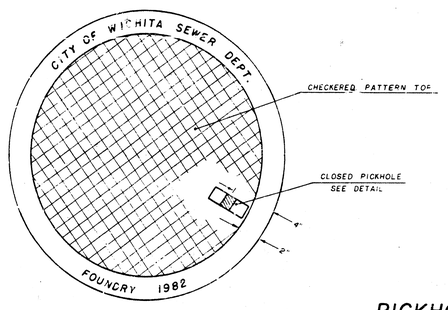

TOP VIEW

PICKHOLE DETAIL

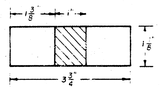

TOP VIEW

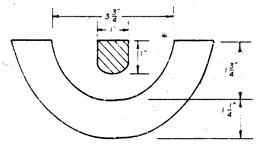

SECTION VIEW

MANHOLE FRAME

Weight: 240 Lbs.

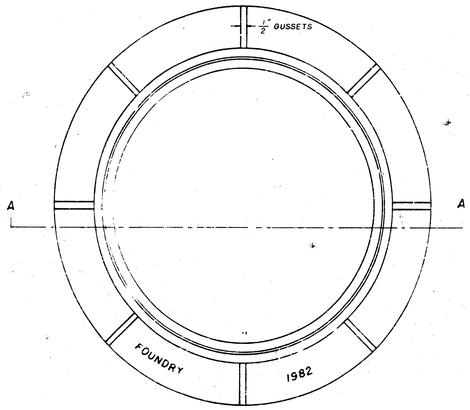

TOP VIEW

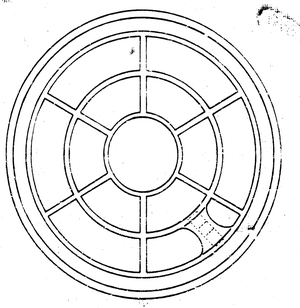

BOTTOM VIEW

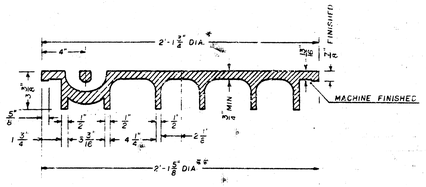

SECTION VIEW

* OUTSIDE DIA TOP OF COVER

** OUTSIDE DIA BOTTOM OF COVER

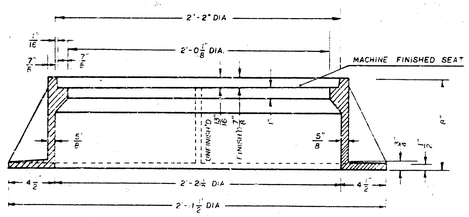

SECTION A-A

GENERAL NOTES

1. MANHOLE CASTINGS SHALL BE MANUFACTURED USING GOOD QUALITY GRAY IRON CONFORMING TO CLASS 30 OF A.S.T.M. DESIGNATION A-48. DIMENSIONS AND WEIGHTS SHOWN ON THE DETAILED DRAWINGS SHALL BE CONSIDERED AS MINIMUM REQUIREMENTS AND ANY DEVIATIONS FROM THE DIMENSIONS SHOWN MUST BE SPECIFICALLY APPROVED. THE FINISHED CASTINGS SHALL BE OF UNIFORM QUALITY, FREE FROM BLOWHOLES, POROSITY, HARD SPOTS, SHRINKAGE DISTORTIONS OR OTHER DEFECTS.

2. MANHOLE CASTINGS SHALL BE COATED WITH AN ASPHALT PAINT RESULTING IN A SMOOTH, TOUGH AND TENACIOUS COATING WHICH IS NOT BRITTLE OR TACKY.

3. MANHOLE CASTINGS SHALL BE MANUFACTURED SUCH THAT A COVER MANUFACTURED BY ANY ONE FOUNDRY WILL FIT INTERCHANGEABLY INTO A FRAME MANUFACTURED BY ANOTHER FOUNDRY AND STILL MEET ALLOWABLE CLEARANCES AND NON-ROCKING REQUIREMENTS. THIS WILL REQUIRE MANUFACTURING OF THE MATCHING FACES ON THE COVER AND THE FRAME TO CLOSE TOLERANCES.

4. THE OUTSIDE CIRCUMFERENCE OF THE VERTICAL FACE OF THE COVER AND THE INSIDE CIRCUMFERENCE OF THE VERTICAL FACE IN THE FRAME RECESS SHALL BE MANUFACTURED TO TOLERANCES SUCH THAT THE CLEARANCE BETWEEN THE COVER AND FRAME WILL NOT EXCEED 1/8" AT ANY POINT AROUND THE CIRCUMFERENCE OF THE COVER. THE SEATING SURFACES BETWEEN THE COVER AND FRAME SHALL BE MACHINED SUCH THAT THESE SURFACES SHALL MAKE FULL CONTACT FOR THEIR FULL CIRCUMFERENCE TO PRECLUDE THE COVER FROM ROCKING IN THE FRAME.

5. THE MANHOLE FRAME AND COVER SHALL BE MARKED WITH LETTERING INDICATING THE NAME OF THE MANUFACTURER AND THE YEAR WHEN THE COVER OR FRAME WAS CAST. THE COVER SHALL BE FURTHER IDENTIFIED WITH REGARDS TO OWNERSHIP USING LETTERS AT LEAST 1" IN HEIGHT. THIS IDENTIFICATION SHALL BE "CITY OF WICHITA SEWER DEPARTMENT". THE WORD DEPARTMENT MAY BE ABBREVIATED. THE TEXTURE OF THE TOP SURFACE OF THE COVER SHALL BE MANUFACTURED IN A CHECKERED PATTERN DESIGN AS INDICATED ON THE DRAWINGS. SMOOTH BLOCKOUTS SHALL BE UTILIZED TO HIGHLIGHT THE LETTERING ON THE COVER SURFACE. THE TOTAL AREA OF SMOOTH SURFACE BLOCKOUT SHALL NOT EXCEED THE AREA AS INDICATED ON THE DRAWING. POSITIONING OF SMOOTH BLOCKOUTS AND LETTERING MAY VARY FROM THAT SHOWN ON THE DETAILED DRAWING.

REVISED JUNE, 1992

VERTICAL RISER DETAILS

ADOPTED AS STANDARD DESIGN

BY

CITY OF WICHITA,KANSAS

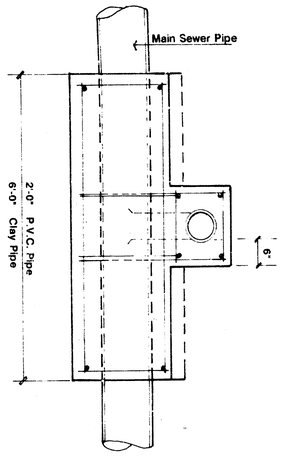

TOP VIEW

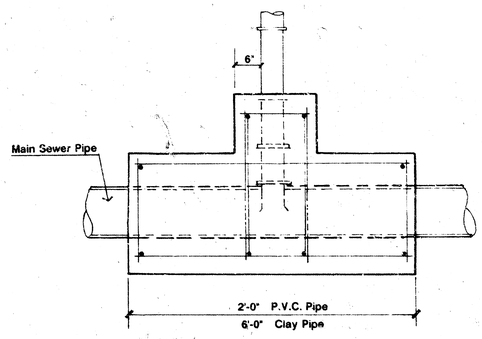

FRONT VIEW

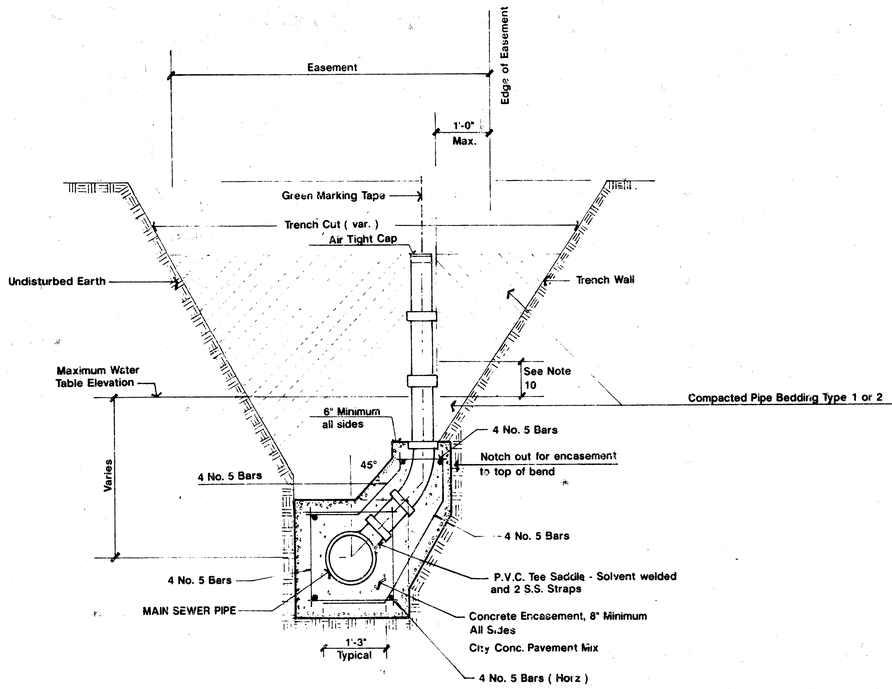

TYPICAL RISER FOR SLOPING TRENCH WALLS

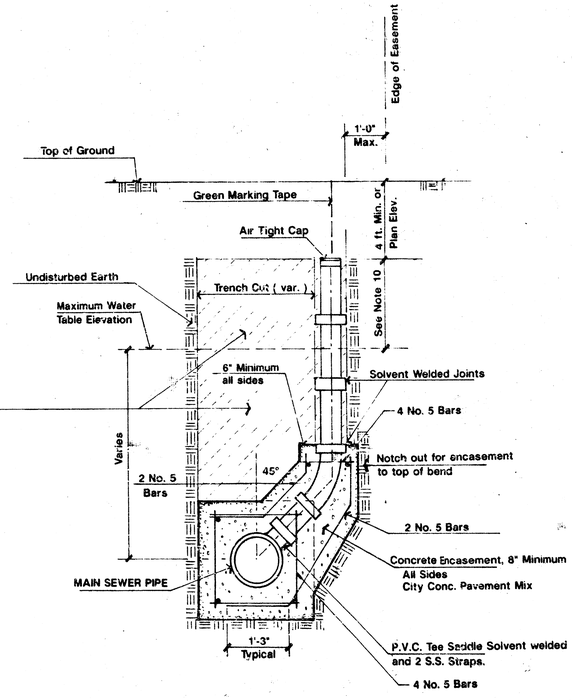

TYPICAL RISER FOR VERTICAL TRENCH WALLS

NOTE: ALL CONNECTIONS TO EXISTING STUBS FROM MANHOLES, OR REALIGNMENT OF EXISTING STUBS, INCLUDING REMOVAL AND REINSTALLATION OF STUBS FOR EXTENSION OF SANITARY SEWER SHALL BE CONSIDERED SUBSIDIARY TO PROJECT AND NOT PAID FOR SEPERATELY.

GENERAL NOTES

1. Risers. Risers shall be installed to serve all lots or tracts where the sanitary sewer main is below the water table. Risers shall also be installed to serve all lots and tracts where the sanitary sewer main depth is greater than 12 feet below the proposed ground elevation. Installation of risers because of field conditions shall be as approved by the Construction Engineer. The location of the risers to serve developed property shall be approved by the property owner and the Construction Engineer.

2. Pipe Stubs. Pipe stubs shall be installed in manholes where locations of manholes will provide satisfactory service connection as determined by the Construction Engineer. The vertical distance between the top of the manhole pipe stub and the top of the sanitary sewer main shall not exceed 2 feet.

   Manhole pipe stubs shall be set such that the top of the stub is no lover than the top of the sanitary sewer main.

3. Sizing. Pipe stubs and risers shall be sized according to the plans and riser table where risers are indicated by the plans. Where risers or pipe stubs are required because of field conditions, the risers and stubs shall be six-inch diameter for commercial or industrial properties and 4" or 6" diameter for residential properties, based on lot size and sanitary sewer main depth. Sizing of risers and stubs shall be approved by the Construction Engineer prior to installation.

4. Riser or Stub Material. Risers and stubs shall be constructed of SDR 35 PVC Pipe, Schedule 40 PVC Pipe, or extra strength Clay Pipe meeting the requirements of the latest revision of A.S.T.M. Designation C700 with compression joints as specified for Clay Pipe in the Standard Specifications.

5. Reinforced Concrete Encasement. Riser connections to clay pipe sanitary sewers shall be reinforced concrete encased both ways from the rise centerline. The reinforced concrete encasement shall extend three feet from the riser centerline or stop at the first sanitary sewer pipe joint within three feet of the riser centerline. Riser connections to PVC Sanitary Sewer mains, shall be reinforced concrete encased one foot each way from the riser centecline. The reinforced concrete encasement shall extend to the top of the vertical bend. The concrete encasement shall be reinforced using reinforcing steel as shown in the appropriate drawing. The concrete shall conform to the City Standard Specifications for concrete pavement.

6. Bedding. Bedding around the sanitary sewer riser shall be compacted Pipe Bedding Type 1 or 2. The bedding shall be placed and compacted from the depth of the sanitary sewer main to the top of the sanitary sewer riser pipe. Compacted Pipe Bedding Type 1 or 2 shall be required for all risers whether constructed in vertical wall or sloped wall treaches. Bedding material and construction practices shall be approved by the Construction Engineer prior to installation.

7. Support of Risers. Sanitary sewer riser pipe shall be supported during trench backfill. The riser pipe shall be held in a vertical position at all times until trench backfill and compaction has been completed. Contractor's methods for supporting and backfilling the riser pipe shall be approved by the Construction Engineer.

8. Plugging. The ends of the riser pipes and manhole stubs shall be plugged using an airtight cap. Cap or plug fittings shall be approved by the Construction Engineer prior to installation. Caps or plugs which do not provide an airtight seal will not be accepted.

9. Top of the Riser Pipe. The top elevation of the sanitary sewer riser pipe shall be built per plan elevations, unless otherwise directed by the Construction Engineer. Where risers elevations are not shown on the plans, the top of the risers shall be at an elevation four feet below the proposed ground surface. If ground water if found within four feet of the proposed ground surface, the top of the sanitary sewer riser pipe shall be at an elevation two feet above the ground water elevation, regardless of the riser elevation shown on the plans.

10. Marking. Locations of the ends of the sanitary sewer riser pipe shall be marked by fastening green colored plastic tape to the end of the riser. The tape shall be supported by a length of wooden [illegible], extending from the top of the riser pipe to the proposed ground surface. The green tape shall be visible and extend one foot above the proposed ground surface. The green tape shall be 4 mil Polyetylene film with a minimum width of three inches, specifically manufactured for the purpose of identification of underground severs.

11. Location Measures. The project inspector shall record and document the location of all risers constructed as measured from the nearest manhole, indicating the direction from he manhole, the direction and distance from the main, size, and elevation of the top of the riser.

12. Riser Location. The riser shall be located per plan if shown. If not shown on the plan, the riser shall be located at the center of the lot, within one foot of the property side of the easement for the lot being served. All riser locations shall be approved by the Construction Engineer prior to installation.

13. Payment. "Sanitary sewer risers" shall be paid for at the contract unit price per each, which price shall be full compensation for all pipe, fittings, marking tape, length of wooden 2x4, reinforced concrete encasement, support during backfill, backfill, labor, site restoration, and any other items necessary to complete the work.

    "Manhole stubs" shall be paid for at the contract unit price per each, which shall be full compensation for all labor and material, and incidentals necessary to complete the work.