Lat. 10, Main 13 Southwest Interceptor Sewer

TO SERVE

PAWNEE MESA ADDITION

Project No.

468 76 245 82343 000 000 001

Index Code:

741652

CITY OF WICHITA, KANSAS

Michael E. Lindebak City Engineer

General Notes

1. The Contractor shall be responsible for preserving property irons. The Contractor will be required to re-establish any property irons which are damaged or destroyed by his construction operations. Such irons shall be re-established by a licensed land surveyor in accordance with state laws.
2. The Contractor shall verify locations of underground utilities through Kansas One-Call (687-2470) prior to any excavation.
3. Underground utility service lines and overhead utility pole lines are to be adjusted as necessary by others prior to construction unless the plans specifically call for their adjustment by the Contractor or unless the plans specifically identify a utility to be adjusted by its owner during construction. Existing utilities and their location, as shown on the plans, represent the best information obtainable for design. The Contractor will be required to work around existing utilities within the right-of-way which do not conflict with proposed construction.
4. The Contractor shall give all property owners and/or tenants of developed property abutting the construction of this project a minimum of ten (10) days advance notice prior to start of construction.
5. The Contractor shall be responsible for maintaining continuous flow of sewage through construction. Contractor's proposed method for maintaining sewage flow shall be approved by the Engineer. Cost of maintaining flow of sewage through construction will not be paid for directly and this cost shall be considered as subsidiary to the other pay items of work.
6. Contractor shall grade the sanitary sewer alignment to the profile and elevations shown on the easement grading plan. All cost for grading shall be paid as lump sum for easement grading.

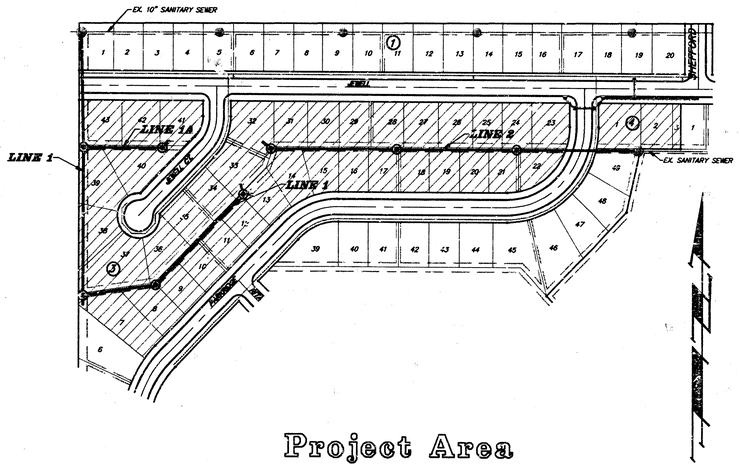

Project Area

SCALE: 1" = 150'

Sheet Index

TITLE SHEET	1
PLAN/PROFILE - LINE 1	2
PLAN/PROFILE - LINE 1 & 1A	3
PLAN/PROFILE - LINE 2	4
STANDARD MANHOLE DETAIL	5
PLAT ADDITION COPY	6

Booked 2-11-94
JKB
As Per Plan

Benchmarks:

"□" Cut on center of North Hubguard R.C.B. Between Lot 1, Blk 5 and Lot 50, Blk. 18, Pawnee Mesa Addition, An Additon to Sedgwick County, Kansas.
Elev. = 144.19 (City Datum)

"□" Cut at the North end of the N.W. Return at Jewell and Shefford, adjacent to the S.E. Corner of Lot 20, Blk. 1, Pawnee Mesa Addition, An Addition to Sedgwick County, Kansas.
Elev. = 142.48 (City Datum)

R.R. Spike in the South face of hedge tree ±60' E. of the N.W. Corner Lot 1, Blk. 1, Pawnee Mesa Addition, An Addition to Sedgwick County, Kansas.
Elev. = 145.91 (City Datum)

N. BRENT WOOTEN LICENSED 8470 PROFESSIONAL ENGINEER

BAUGHMAN COMPANY P. A.
ENGINEERING & SURVEYING
316/262-7271 • 315 ELLIS • WICHITA, KANSAS 67211

BENCHMARKS:

"□" Cut on center of North Hubguard R.C.B. Between Lot 1, Blk 5 and Lot 50 Blk. 18, Pawnee Mesa Addition, An Addition to Sedgwick County, Kansas.
Elev. = 144.19 (City Datum)

"□" Cut at the North end of the N.W. Return at Jewell and Shefford, adjacent to the S.E. Corner of Lot 20, Blk. 1, Pawnee Mesa Addition, An Addition to Sedgwick County, Kansas.
Elev. = 142.48 (City Datum)

R.R. Spike in the South face of hedge tree ±60' E. of the N.W. corner Lot 1, Blk. 1, Pawnee Mesa Addition, An Addition to Sedgwick County, Kansas.
Elev. = 145.91 (City Datum)

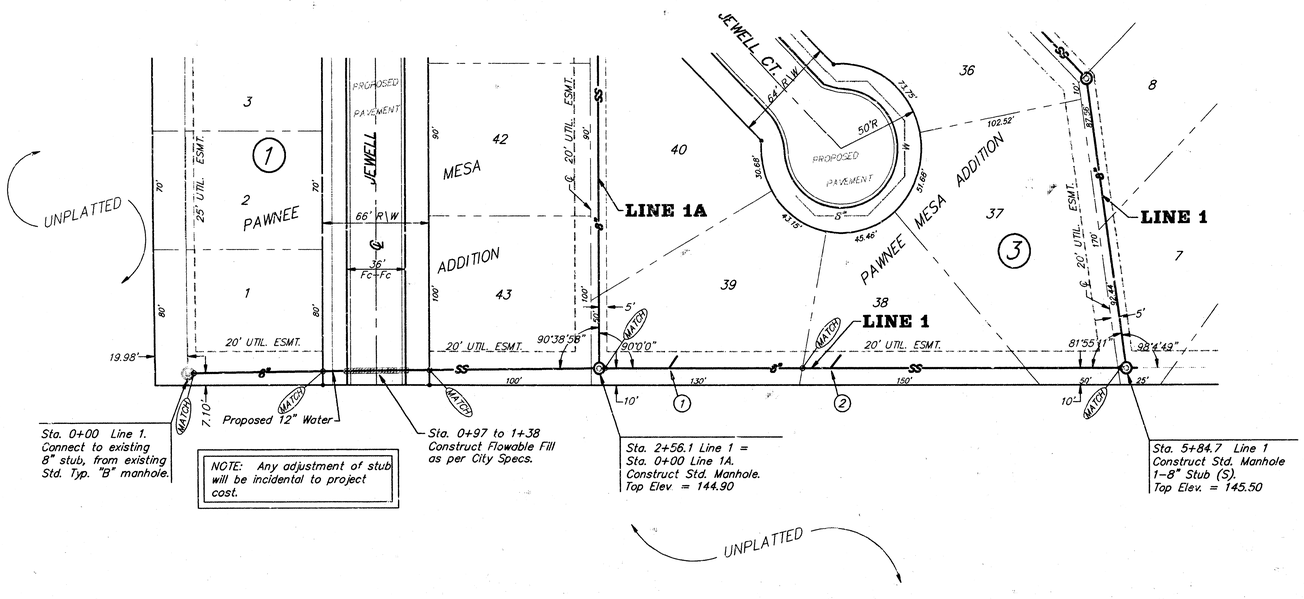

SCALE:
1" = 40' Horiz.
1" = 5' Vert.
• = Iron

RISER TABLE

Riser Number	Line Number	Station	Direction	Lot Block	LF 4" Riser	Top Riser
1	1	3+00	Left	39	7.5'	136.75
2	1	4+00	Left	38	7.5'	137.15
3	1A	0+20	Left	43	5.0'	136.50

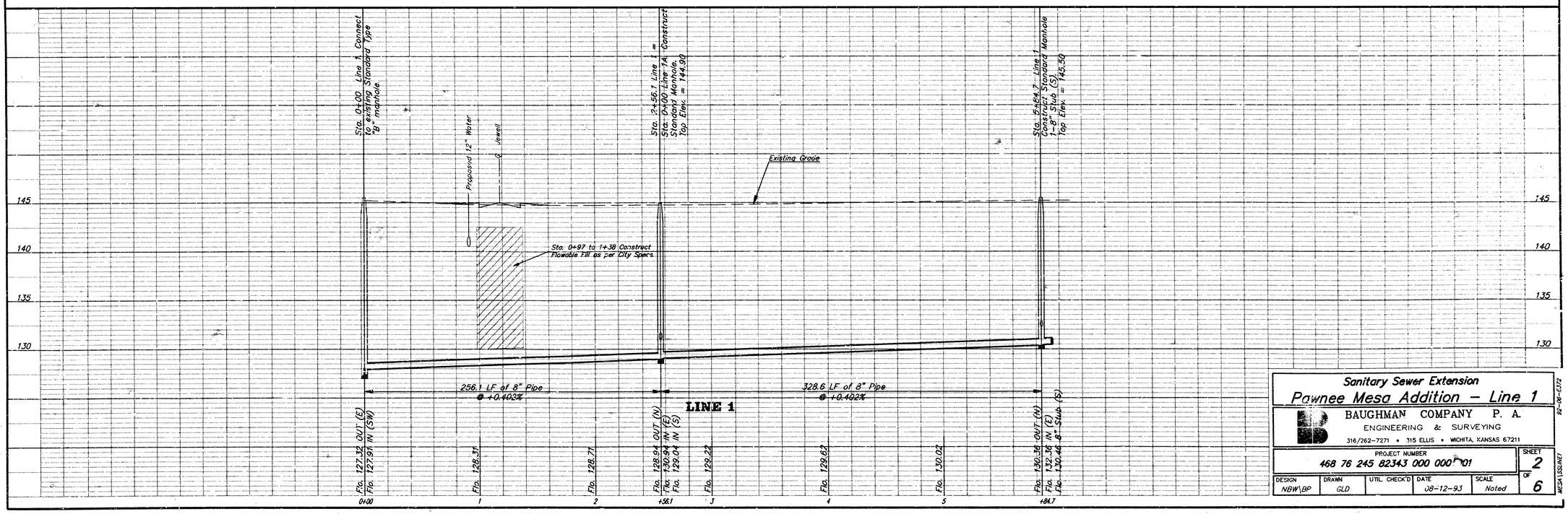

Sanitary Sewer Extension
Pawnee Mesa Addition – Line 1

BAUGHMAN COMPANY P. A.
ENGINEERING & SURVEYING
316/262-7271 • 315 ELLIS • WICHITA, KANSAS 67211

PROJECT NUMBER 468 76 245 82343 000 000 01

SHEET 2 OF 6

DESIGN	DRAWN	UTIL. CHECK'D	DATE	SCALE
NBW\BP	GLD		08-12-93	Noted

92-06-5772
MESA\ISSUE7

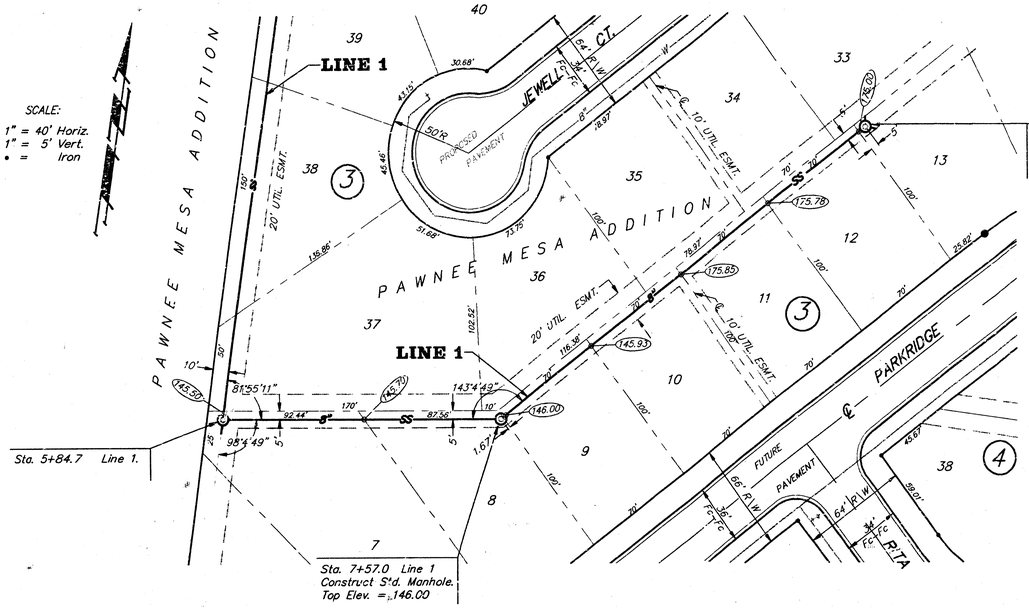

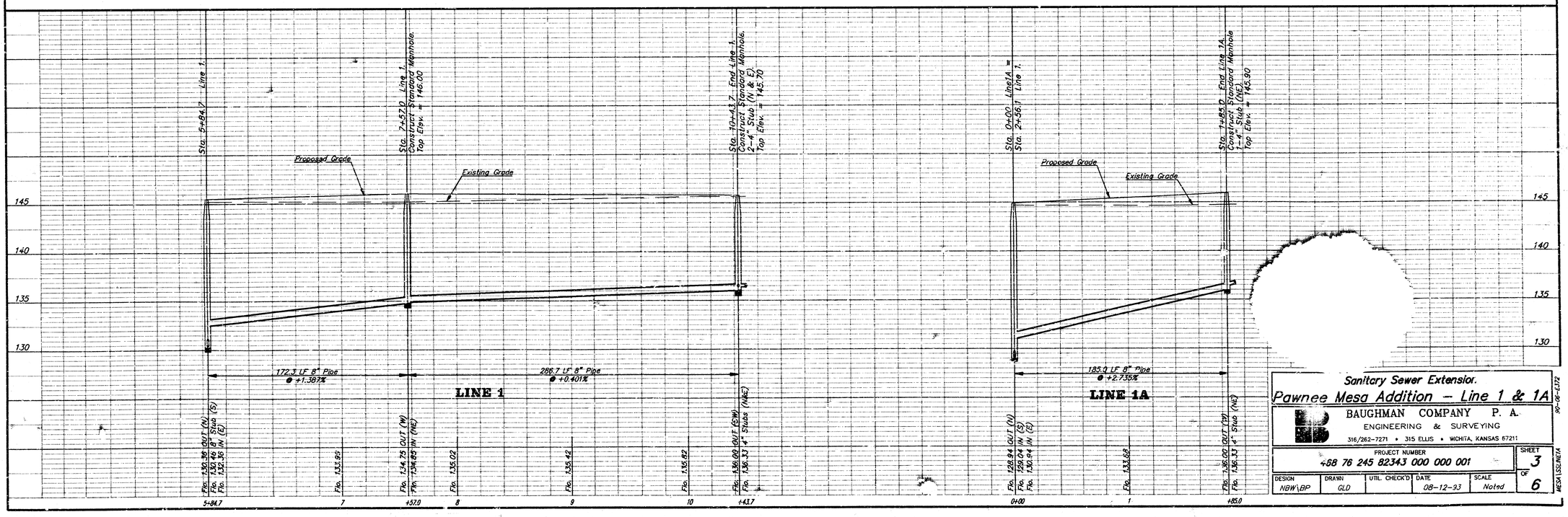

Sanitary Sewer Extension.

Pawnee Mesa Addition – Line 1 & 1A

BAUGHMAN COMPANY P. A.
ENGINEERING & SURVEYING
316/262-7271 • 315 ELLIS • WICHITA, KANSAS 67211

PROJECT NUMBER	SHEET
+58 76 245 82343 000 000 001	3 OF 6

DESIGN	DRAWN	UTIL. CHECK'D	DATE	SCALE
NBW\BP	GLD		08-12-23	Noted

90-06-3372

MESA LSSLINE1A

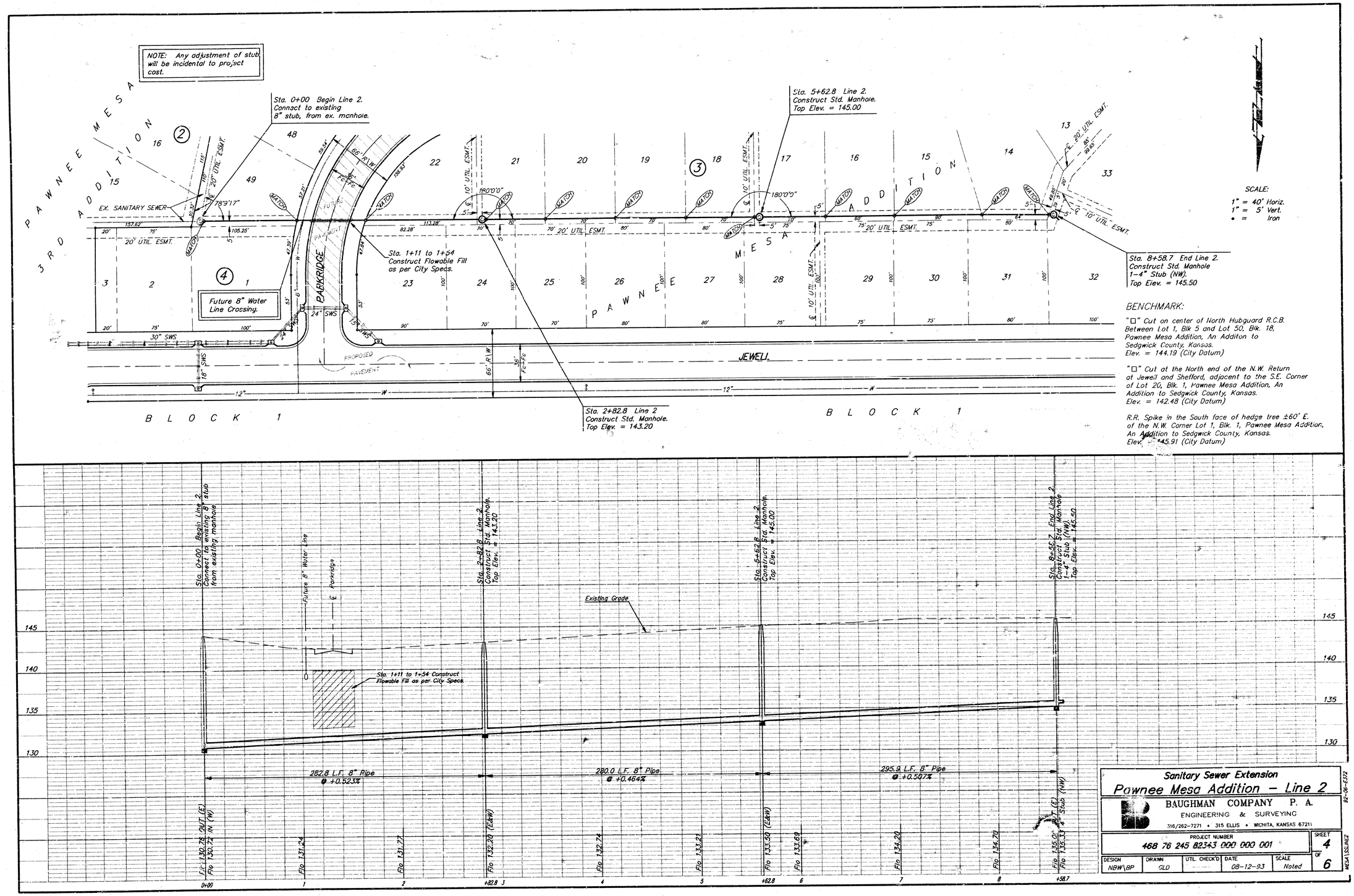

Sanitary Sewer Extension

Pawnee Mesa Addition – Line 2

BAUGHMAN COMPANY P. A.
ENGINEERING & SURVEYING
316/262-7271 • 315 ELLIS • WICHITA, KANSAS 67211

PROJECT NUMBER					SHEET
468 76 245 82343 000 000 001					4 OF 6
DESIGN	DRAWN	UTIL. CHECK'D	DATE	SCALE	
NBW\BP	GLD		08-12-93	Noted	

92-06-E372

MESA\SSLINE2

SEWER APPURTENANCES DETAILS

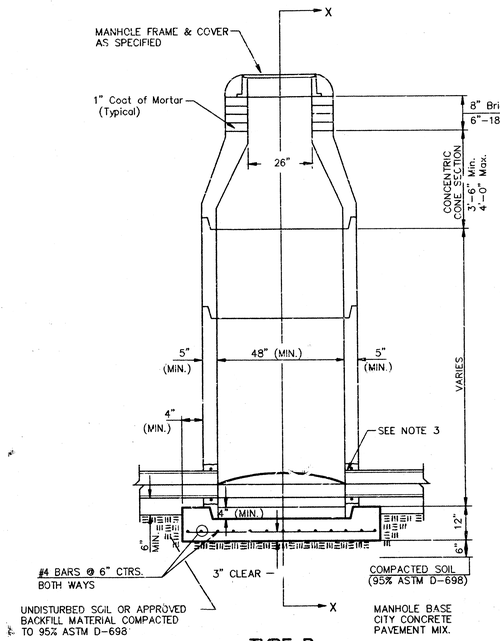

TYPE P STANDARD MANHOLE

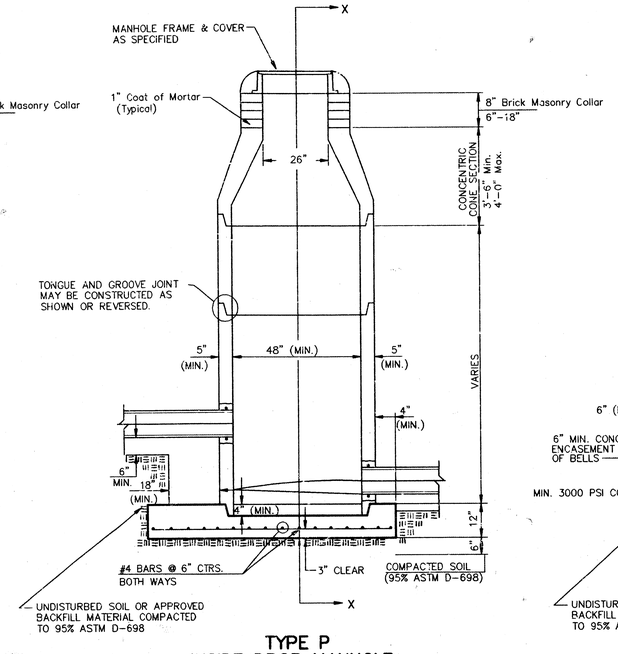

TYPE P INSIDE DROP MANHOLE

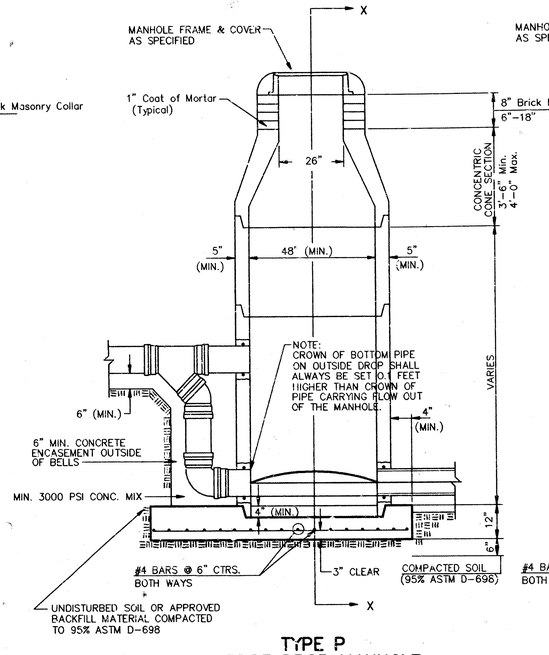

TYPE P OUTSIDE DROP MANHOLE

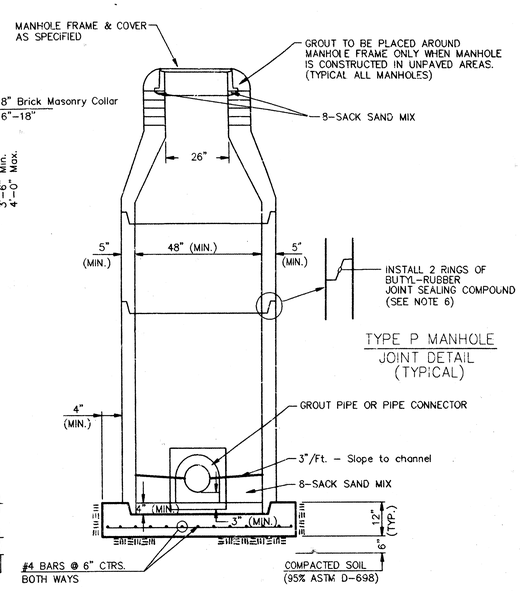

TYPE P MANHOLE
JOINT DETAIL
(TYPICAL)

SECTION X (TYPICAL)

GENERAL NOTES

PRECAST MANHOLE NOTES

1. ALL PRECAST CONCRETE MANHOLE SECTIONS SHALL CONFORM TO THE LATEST REVISIONS OF A.S.T.M. C478 AS MODIFIED BY THE SPECIFICATIONS.
2. NON-SHRINK GROUT SHALL BE NON-METALLIC TYPE.
3. APPROVED FLEXIBLE WATERSTOP GASKETS SHALL BE INSTALLED TO JOIN THE SEWER TO THE MANHOLE WALL WHEN A.B.S. COMPOSITE PIPE OR P.V.C. PIPE IS USED. FOR OTHER TYPES OF PIPE THE SEWER SHALL BE GROUTED IN PLACE WITH NON-SHRINK GROUT. THE SEWER PIPE SHALL BE SUPPORTED WITH CONCRETE ENCASEMENT A MINIMUM OF 3 FEET FROM THE MANHOLE WALL AND TO THE FIRST JOINT FOR V.C.P. SUCH THAT THE JOINT REMAINS FLEXIBLE.
4. ALL INSIDE SURFACES OF THE CONCRETE MANHOLE WHICH WOULD BE EXPOSED TO SEWER GAS SHALL BE COATED WITH 2 COATS TNEMEC SERIES 66 HI-BUILD EPOXOLINE, DRY THICKNESS OF 8 MILS (MIN.)
5. EXTERIOR MANHOLE WALLS SHALL BE COATED WITH 1 COAT MOBILARMA 633 BITUMINOUS COATING.
6. JOINT SEALING COMPOUND SHALL BE KENT SEAL NO. 2 OR APPROVED EQUAL.
7. PRECAST MANHOLES SHALL BE SET AT LEAST 4 INCHES INTO THE MANHOLE BASE.
8. TOP OF MANHOLE FLOOR SLAB SHALL BE AT LEAST 3 INCHES BELOW THE FLOW LINE OF THE OUTLET PIPE TO INSURE SUFFICIENT MINIMUM THICKNESS OF SHAPED INVERT.
9. LIFTING HOLES SHALL BE FILLED WITH NON-SHRINK GROUT AND THE INTERIOR SURFACE COATED AS SPECIFIED.
10. MORTAR USED IN MASONRY CONSTRUCTION SHALL CONTAIN 8 SACKS OF CEMENT PER CUBIC YARD. CONCRETE USED IN MANHOLE BASES SHALL CONFORM TO THE REQUIREMENTS OF CONCRETE FOR CONCRETE PAVEMENT CONSTRUCTION AS SPECIFIED IN THE CITY STANDARD PAVING SPECIFICATIONS USING CITY CONCRETE PAVEMENT MIX WITHOUT AIR ENTRAINING ADMIXTURE. MORTAR SHALL BE PLACED AROUND THE MANHOLE RING AS SHOWN ON THE DRAWINGS WHEN MANHOLES ARE CONSTRUCTED IN UNPAVED AREAS. MANHOLES CONSTRUCTED WHERE PIPE SIZES ARE SMALLER THAN 24" SHALL HAVE AN INSIDE DIAMETER OF 4'. MANHOLES CONSTRUCTED WHERE PIPE SIZES ARE 24" OR LARGER SHALL HAVE AN INSIDE DIAMETER OF 5'. COMPLETED MANHOLE SHALL BE WITHOUT LEAKS AND WATER TIGHT.
11. REINFORCING STEEL SHALL BE INSTALLED IN THE MANHOLE BASES AND SHALL CONSIST OF NO. 4 BARS PLACED ON 6" CENTERS IN BOTH DIRECTIONS. THE MANHOLE BASE REINFORCEMENT SHALL BE PLACED AT LEAST 3" ABOVE THE BOTTOM OF THE MANHOLE BASE. ALL COSTS FOR FURNISHING AND INSTALLING REINFORCING STEEL SHALL BE INCLUDED IN THE UNIT PRICE BID FOR THE MANHOLE.
12. OPENINGS SHALL BE CUT INTO THE MANHOLE WALL WHEN OUTSIDE DROPS ARE CONSTRUCTED ON EXISTING MANHOLES. SUCH OPENINGS CUT INTO EXISTING MANHOLES SHALL BE AS SMALL AS PRACTICAL TO FACILITATE INSTALLING AND GROUTING THE NEW PIPE IN PLACE. WATERSTOP GASKETS SHALL BE USED WITH P.V.C. AND A.B.S. COMPOSITE PIPE. THE NEW PIPE SHALL BE GROUTED INTO THE OPENING USING AN APPROVED NONSHRINK GROUT FOR THE FULL MANHOLE WALL THICKNESS. THE EXTERIOR OF THE COMPLETED CONNECTION SHALL BE SEALED WITH AN APPROVED BITUMINOUS COATING SUCH THAT THE CONNECTION WILL BE WATER TIGHT. FLOOR OF MANHOLE SHALL BE MODIFIED TO FORM NEW FLOW CHANNEL FOR THE NEW CONNECTION AS INDICATED BY THE DRAWING. THIS WORK, INCLUDING MODIFICATION OF MANHOLE FLOOR, SHALL BE PAID FOR AT THE UNIT PRICE BID FOR OUTSIDE DROP STACK CONSTRUCTED ON EXISTING MANHOLE.
13. THE FLOORS OF ALL MANHOLES SHALL BE SHAPED WITH FLOW CHANNELS SUCH THAT THE MANHOLES WILL BE SELF CLEANING AND FREE OF AREAS WHERE SOLIDS COULD BE DEPOSITED AS SEWAGE FLOWS THROUGH THE MANHOLE FROM ALL INLET PIPES TO THE OUTLET PIPE. FLOW CHANNELS SHALL BE FORMED TO MATCH THE BOTTOM HALVES OF THE INFLOWING PIPES AND THE OUTFLOWING PIPE AS SHOWN BY THE DRAWINGS EXCEPT FOR INSIDE DROP MANHOLES. FLOW CHANNELS FOR INSIDE DROP MANHOLES SHALL BE CONSTRUCTED AS INDICATED BY THE DRAWING. MANHOLE FLOORS SHALL HAVE SLOPES OF 3 INCHES PER FOOT IN THE AREAS OUTSIDE OF THE FLOW CHANNELS SLOPED TOWARD THE FLOW CHANNELS. PIPES LAID THROUGH MANHOLES SHALL HAVE THE TOP HALF REMOVED TO NEAT LINES FOR THE FULL INSIDE DIAMETER OF THE MANHOLE. MANHOLE FLOORS SHALL THEN BE SHAPED AROUND THE BOTTOM HALF OF THE PIPE WHICH FORMS THE FLOW CHANNEL.
14. PIPES INSTALLED WITHIN THE EXCAVATION MADE FOR THE MANHOLE SHALL BE CRADLED WITH CONCRETE TO THE LIMITS OF THE MANHOLE EXCAVATION. WHEN CLAY PIPE IS USED, THE CRADLE SHALL EXTEND TO THE FIRST JOINT OUTSIDE THE MANHOLE. THE CRADLE SHALL BE TERMINATED AT THE CLAY PIPE JOINT IN A MANNER WHICH WILL MAINTAIN THE FLEXIBILITY OF THE JOINT. COST OF CRADLE WITHIN MANHOLE EXCAVATION OR TO CLAY PIPE JOINTS ADJACENT TO MANHOLE SHALL BE INCLUDED IN THE UNIT PRICE BID FOR THE MANHOLE.
15. MANHOLE COVER CASTINGS AND MANHOLE FRAME CASTINGS SHALL CONFORM TO THE REQUIREMENTS AS INDICATED IN THE STANDARD SPECIFICATIONS AND AS SHOWN IN THE STANDARD DETAIL DRAWING.
16. THE VERTICAL DROP IN INSIDE DROP MANHOLES SHALL NOT EXCEED 2' FOR INFLOWING PIPES SIZED 12" OR SMALLER AND 2' FOR INFLOWING PIPES LARGER THAN 12". THE CROWNS OF INFLOWING PIPES SHALL NEVER BE SET LOWER THAN THE CROWN OF THE OUTFLOWING PIPE.
17. STANDARD MANHOLES AND STANDARD INSIDE DROP MANHOLES SHALL BE BID AS STANDARD MANHOLES FOR THE TYPE AND DIAMETER INDICATED. OUTSIDE DROP MANHOLES SHALL BE BID AS STANDARD OUTSIDE DROP MANHOLES FOR THE TYPE AND DIAMETER INDICATED. ALL MANHOLE DIAMETERS WILL BE 4' UNLESS INDICATED OTHERWISE.
18. A BRICK MASONRY COLLAR SHALL BE INSTALLED BETWEEN THE CAST IRON FRAME AND THE CONCENTRIC CONE. THE COLLAR WILL HAVE 8" WALLS AND A VERTICAL HEIGHT OF 6" MINIMUM AND 18" MAXIMUM. A 1" COAT OF MORTAR WILL BE PLASTERED ON THE OUTSIDE OF THE COLLAR. THE USE OF PRE-CAST CONCRETE SPACERS FOR MANHOLE TOP ADJUSTMENT IS ALSO ALLOWED.

CITY OF WICHITA, KANSAS
STANDARD MANHOLE DETAILS
SEWER APPURTENANCES DETAILS

BAUGHMAN COMPANY P. A.
ENGINEERING & SURVEYING
316/262-7271 • 315 ELLIS • WICHITA, KANSAS 67211

REV.

PROJECT NUMBER
468-76-245-82343-000-000-001

SHEET 5 OF 6

DESIGN	DRAWN	APPROVED	DATE	SCALE

FINAL PLAT OF

PAWNEE MESA ADDITION

AN ADDITION TO SEDGWICK COUNTY, KANSAS

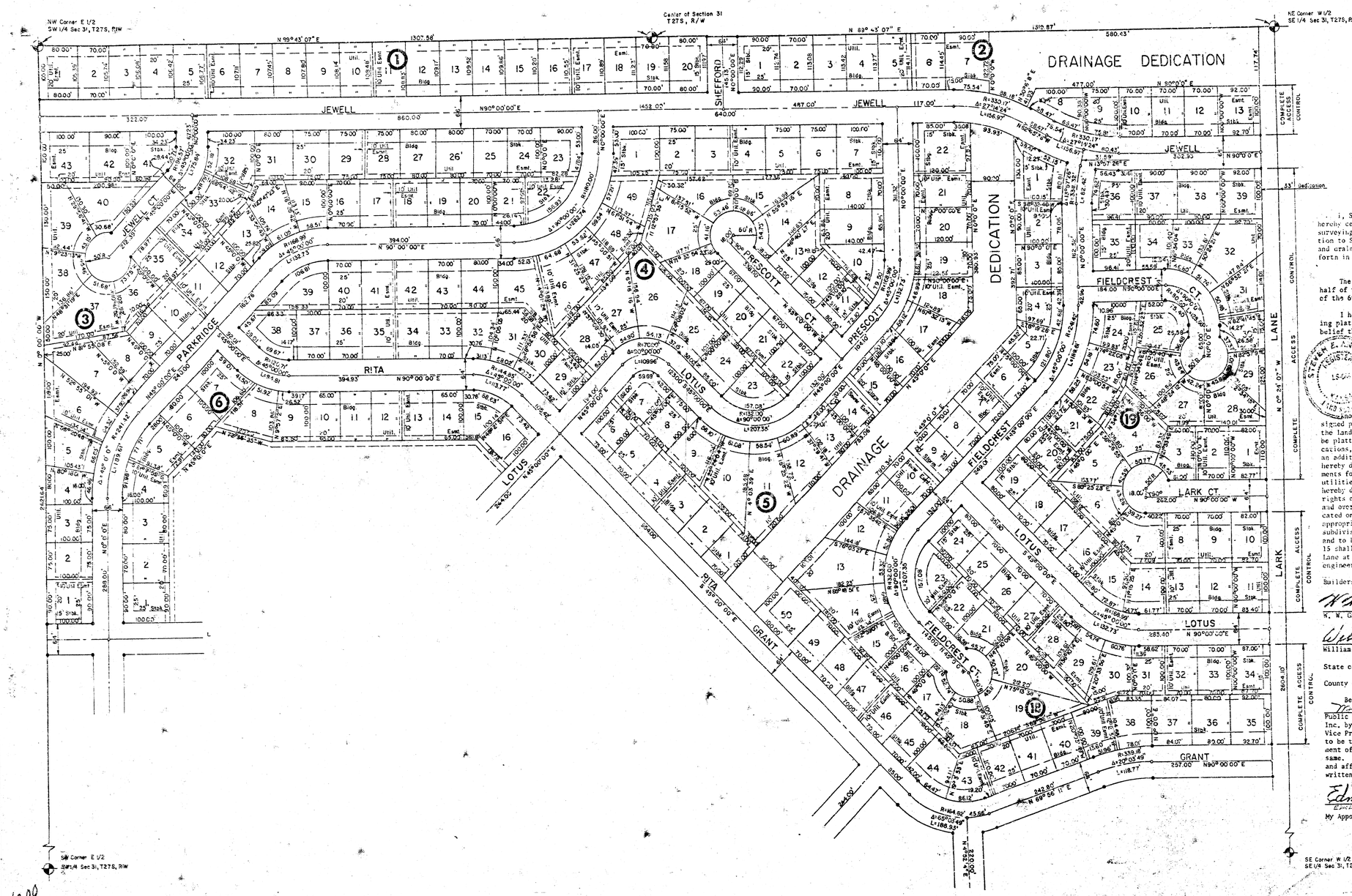

I, Steven E. Anderson, a Land Surveyor in Kansas, do hereby certify that I have been in responsible charge of surveying and platting of "Pawnee Mesa Addition", an addition to Sedgwick County, Kansas into lots, blocks, streets and drainage dedications, the same being accurately set forth in the accompanying plat and described as follows:

The east half of the southwest quarter and the west half of the southeast quarter, Section 31, T 27 S, R 1 W of the 6th P.M., Sedgwick County, Kansas.

I hereby certify that the details of the accompanying plat are correct to the best of my knowledge and belief this 11th day of March, 1980.

By: Steven E. Anderson
Steven E. Anderson
VAN DOREN-HAZARD-STALLINGS
260 North Rock Road #250
Wichita, Kansas 67206

Know all men by these presents that we the undersigned propert, owners of the land as above set forth in the Land Surveyor's Certificate have caused the same to be platted into lots, blocks, streets and drainage dedications, the same to be known as "Pawnee Mesa Addition", an addition to Sedgwick County, Kansas. The streets are hereby dedicated to and for the use of the public. Easements for the construction and maintenance of public utilities are hereby granted. Drainage dedications are hereby dedicated for drainage purposes. All abutters rights of access over and across the north line of Pawnee and over and across the west line of Lark Lane as indicated on the accompanying plat are hereby granted to the appropriate governing body, provided, however, that the subdivision shall have access to Pawnee at 6 locations and to Lark lane at 6 locations, as shown. Lot 1, Block 15 shall have access to Pawnee at 3 locations and Lark lane at 2 locations to be determined by the appropriate engineer.

Builders, Inc.

W. W. Garvey, President

William E. Morin, Vice President

State of Kansas, ss:

County of Sedgwick,

Be it remembered that on this 11 day of March 1980, 1980 before me, a Notary Public in and for said State and County, came Builders, Inc. by W. W. Garvey, President and William E. Morin, Vice President of Builders, Inc., to me personally known to be the same persons who executed the foregoing instrument of writing and duly acknowledged the execution of the same. In testimony whereof I have hereunto set my hand and affixed my notarial seal the day and year above written.

Edmee J. Cermak, Notary Public
EDMEE J. CERMAK

My Appointment Expires: 12-10-81

EDMEE J. CERMAK
STATE NOTARY PUBLIC
SEDGWICK COUNTY, KANSAS
MY APPT. EXP. DEC. 10, 1981

SHEET 6 OF 6

P-245

8-1-81