CONSTRUCTION PLANS

SANITARY SEWER EXTENSIONS

PAWNEE MESA ADDITION-PHASE II

TO

THE CITY OF WICHITA, KANSAS

LATERAL 16, MAIN 13, SOUTHWEST INTERCEPTOR

MICHAEL E. LINDEBAK, P.E. – CITY ENGINEER
PROJECT NO. 468-82701
INDEX CODE 743096

GENERAL NOTES:

1. Existing utility lines and their location, as shown on the plans, represent the best information obtainable for design. The contractor will be required to work around existing utilities within the right-of-way which do not conflict with proposed construction.

2. Rubble from the removal of miscellaneous structures and excess excavation which is to be wasted shall be the disposed of on sites to be provided by the Contractor. These sites shall be approved by the Engineer as to suitability, appearance and site location. Locations that, in the opinion of the Engineer, will leave an unsightly appearance will not be approved.

   All disposal sites must be approved by the Kansas Department of Health and Environment. Material either stockpiled or disposed of in a flood plain would require a Kansas State Board of Agriculture permit. Any material dumped in waters of the United States or wetlands is subject to U.S. Corps. of Engineers permitting regulations. Any material buried or stockpiled beyond approved construction limits would require additional archaeological investigations unless buried in a previously approved borrow location.

3. The Contractor shall be responsible for maintaining continuous flow of sewage through construction. Contractor's proposed method for maintaining sewage flow shall be approved by the Engineer. Cost of maintaining flow of sewage through construction will not be paid for directly and this cost shall be considered as subsidiary to the other pay items of the work.

4. The Contractor shall be responsible for preserving property irons. The Contractor will be required to re-establish any property irons which are damaged or destroyed by his construction operations. Such irons shall be re-established by a licensed land surveyor in accordance with state laws.

5. Trees and shrubs in public right-of-way which are in direct conflict with proposed new construction shall be removed by the Contractor with the Engineer's approval. Trees and shrubs which are not in direct conflict with the proposed new construction shall be saved and protected from damage.

6. Contractor shall vacuum test all manholes according to the City of Wichita standard specifications.

7. The tops of all Manholes to be set 0.4 feet above existing ground unless otherwise noted.

8. The Contractor shall provide construction staking.

9. Sewer service lines that cross over the top of water mains shall be encased in concrete, 10 feet each side of the crossing. If the sewer crosses below the water line, the sewer line joints must be at least 10 feet away from the water line or the sewer must be encased in concrete as described above. 12" clearance must be maintained between the sewer and water lines.

10. All disturbed areas shall be seeded with temporary rye grass within 14 days of disturbance at a rate of 200 lbs. per acre, except where otherwise noted on the plans.

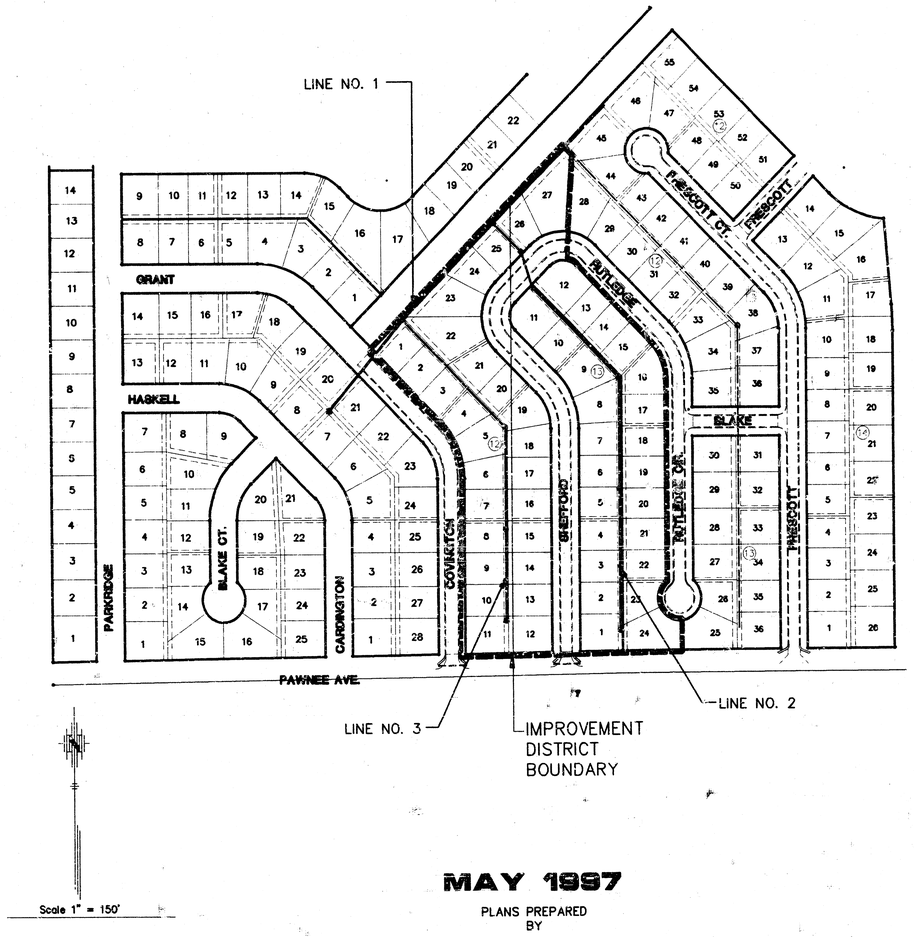

INDEX

TITLE SHEET	SHEET 1
LINE NO. 1	SHEET 2
LINE NO. 2	SHEET 3
LINE NO. 3	SHEET 4
TYPE "P" MANHOLE	SHEET 5
COORDINATE POINTS LIST	SHEET 6
EASEMENT GRADING PLAN	SHEET 7
PAWNEE MESA ADDITION PLAT	SHEET 8

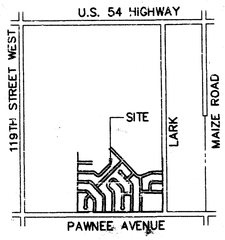

LOCATION MAP
NO SCALE

BENCH MARKS

(City of Wichita Datum)

BM #1 City of Wichita Disc
34' S. of CL Pawnee & 6' W. of Hedge Row S.
Elev. 145.50

BM #2 "□" Cut in center of E. Hdwl. of Drainage Structure under Grant near NW corner of Lot 55, Block 12 Pawnee Mesa Addition
Elev. 144.28

Booked
N-287
Per Plan
12/30/97
RDL

6/23/97

MAY 1997

PLANS PREPARED
BY
POE & ASSOCIATES OF KANSAS, INC.
Consulting Engineers
5940 E. Central Suite 200 ▫ Wichita KS 67208 ▫ 316/685-4114

F:\APPS\DCA\P\622\BASE Mon Jun 23 15:45:47 1997 Steve Schmidt-Poe & Assoc.

PRESCOTT CT.

SHEFFORD

COVINGTON

Sta. 0+00 Line No. 1
Existing MH
N 6183.01, E 6195.44

Sta. 0+07.04 Line No. 1
Connect to Exist. 8" Stub
N 6178.03, E 6190.46

Sta. 2+36.50 Line No. 1
Sta. 0+00 Line No. 2
Constr. Std. MH Type "P"
N 6015.78, E 6028.20

Sta. 5+38 Line No. 1
Sta. 0+00 Line No. 3
Constr. Std. MH Type "P"
N 5802.59, E 5815.01

Sta. 8+02.75
Constr. Std. MH Type "P"
3-8" Stubs(N, S & W)
FL Elev.=/135.14(N & S)
FL Elev.= 135.04(W)
N 5601.77, E 5642.48

175°40'03"

GRAPHIC SCALE
40 0 20 40 80
(IN FEET)
1 INCH = 40 FT.

5 0
1 INCH = 5 FT.
(Vert.)

LINE NO. 1

Sta. 0+00 Line No. 1
Existing MH
Sta. 0+07.04 Line No. 1
Connect to Exist. 8" Stub

Sta. 2+36.50 Line No. 1
Sta. 0+00 Line No. 2
Constr. Std. MH Type "P"

Sta. 5+38 Line No. 1
Sta. 0+00 Line No. 3
Constr. Std. MH Type "P"

Sta. 8+02.75
Constr. Std. MH Type "P"

Top MH Elev.=143.1

Existing Ground
Finish Grade

Top MH Elev.=142.7

Install Flowable Fill From Sta. 6+47.3 to Sta. 6+83.4 Top Elev.=142.0

Top MH Elev.=144.2

Existing MH

Existing 30" Storm Sewer
FL Elev.=138.69

Proposed 8" Waterline
Top Elev. 136.7

Line No. 2
FL 132.68

Line No. 3
FL 134.08

229.48 L.F. 8" PVC Pipe @ 0.40% Grade

301.50 L.F. 8" PVC Pipe @ 0.40% Grade

264.75 L.F. 8" PVC Pipe @ 0.40% Grade

FL 131.73
FL 132.10
FL 132.50
FL 132.65
FL 132.90
FL 133.50
FL 133.70
FL 133.85
FL 134.10
FL 134.50

150 145 140 135 130 125 120

0+00 1+00 2+00 3+00 4+00 5+00 6+00 7+00

POE & ASSOCIATES OF KANSAS, INC.
Consulting Engineers
5940 E. Central Suite 200 ■ Wichita KS 67208 ■ 316/685-4114

ENGINEER : G. Miles
INTERN ENGR.:
CAD TECH: S. Schmidt
DATE : May 1997
SHEET 2 OF 5

PAWNEE MESA ADDITION-PHASE II
Lateral 16, Main 13, Southwest Interceptor
LINE NO. 1
CITY OF WICHITA, KANSAS
Project No. 468-82701
Index Code 743096

F:\APPS\DCA\PAGE2\BASE Tue Jun 24 09:53:05 1997 Steve Schmidt-Poe & Assoc.

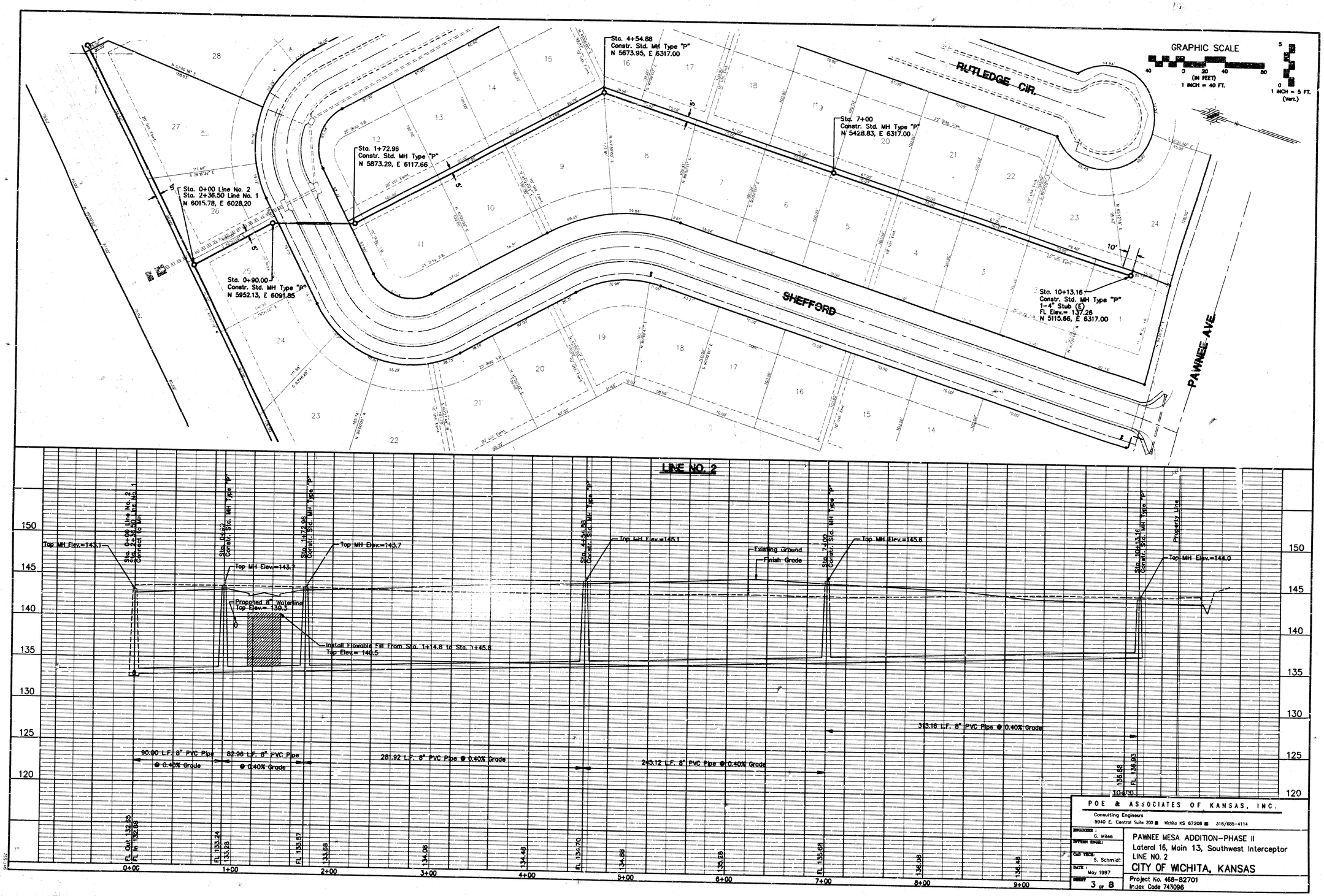

POE & ASSOCIATES OF KANSAS, INC.
Consulting Engineers
5940 E. Central Suite 200 ■ Wichita KS 67208 ■ 316/685-4114

ENGINEER : G. Miles
DRAWN BY: S. Schmidt
DATE : May 1997
SHEET 3 of 8

PAWNEE MESA ADDITION-PHASE II
Lateral 16, Main 13, Southwest Interceptor
LINE NO. 2
CITY OF WICHITA, KANSAS
Project No. 468-82701
Index Code 740096

F:\APPS\DOA\PROJBASE Wed Jun 11 13:23:49 1997 Steve Schmidt-Poe & Assoc.

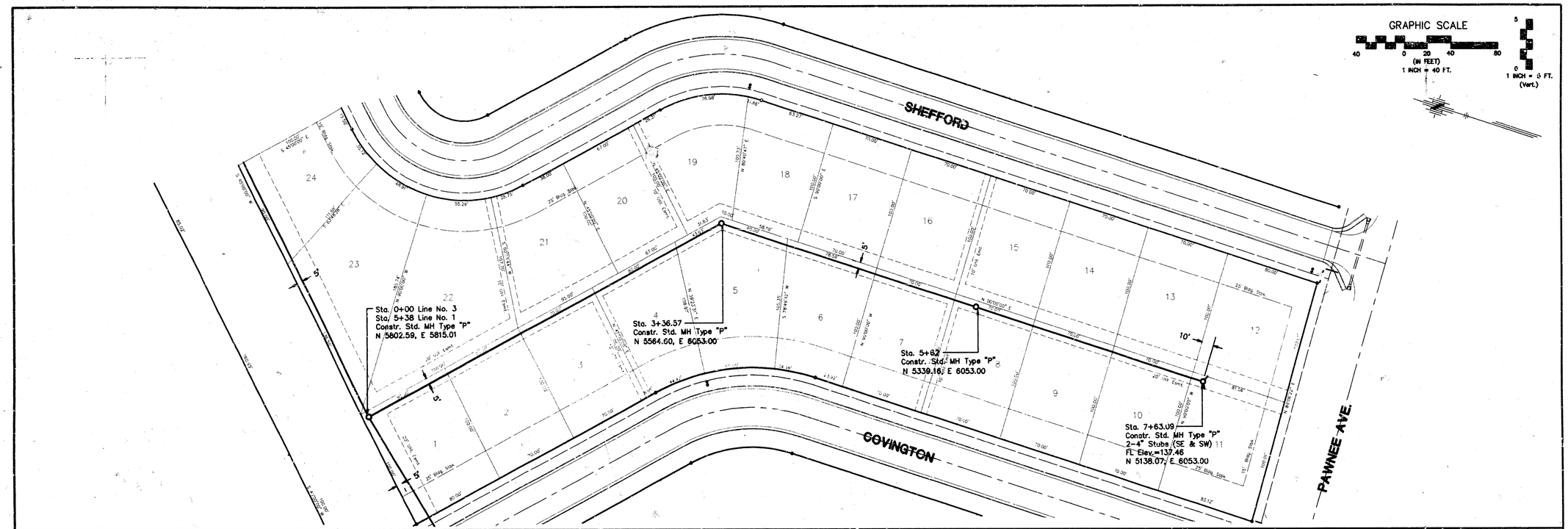

POE & ASSOCIATES OF KANSAS, INC.
Consulting Engineers
5940 E. Central Suite 200 ■ Wichita KS 67208 ■ 316/685-4114

ENGINEER: G. Miles
INTERN ENGR.:
CAD TECH.: S. Schmidt
DATE: May 1997
SHEET 4 OF 8

PAWNEE MESA ADDITION-PHASE II
Lateral 16, Main 13, Southwest Interceptor
LINE NO. 3
CITY OF WICHITA, KANSAS
Project No. 468-82701
Index Code 743096

F:\APPS\DCA\P\622\BASE Wed Jun 11 15:25:28 1997 Steve Schmidt-Poe & Assoc.

SEWER APPURTENANCES DETAILS

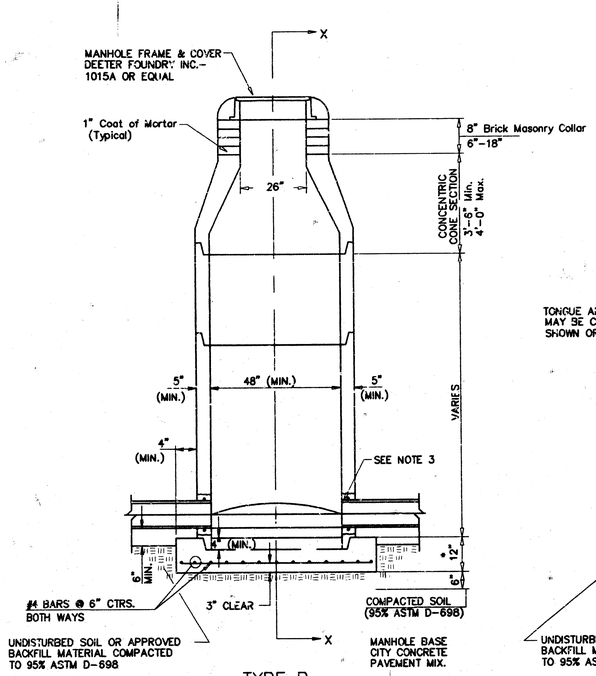

TYPE P
STANDARD MANHOLE

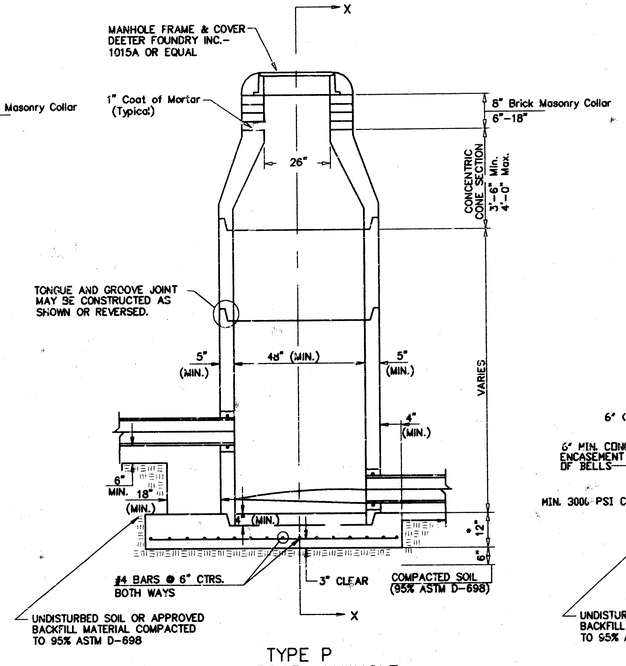

TYPE P
INSIDE DROP MANHOLE

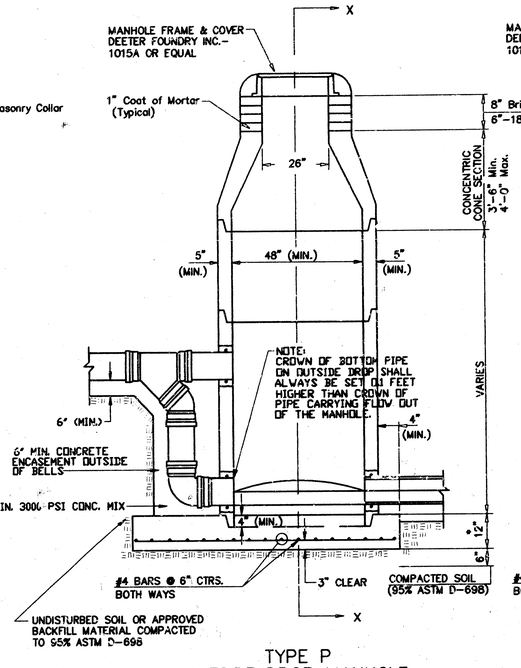

TYPE P
OUTSIDE DROP MANHOLE

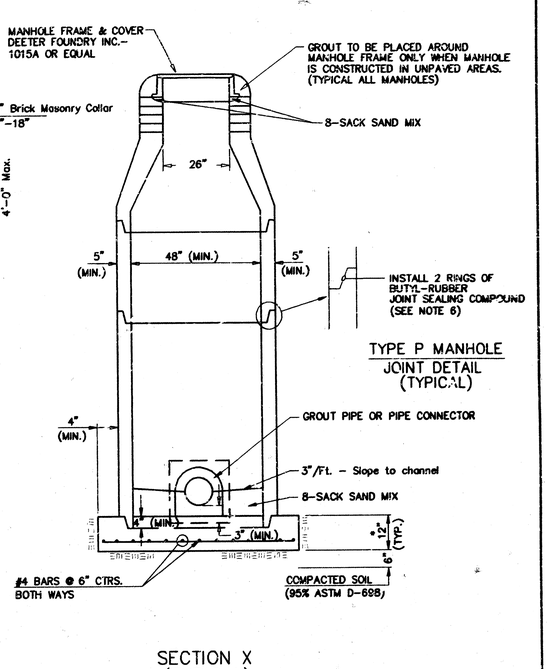

SECTION X
(TYPICAL)

GENERAL NOTES

PRECAST MANHOLE NOTES

1. ALL PRECAST CONCRETE MANHOLE SECTIONS SHALL CONFORM TO THE LATEST REVISIONS OF A.S.T.M. C478 AS MODIFIED BY THE SPECIFICATIONS.
2. NON–SHRINK GROUT SHALL BE NON–METALLIC TYPE.
3. APPROVED FLEXIBLE WATERSTOP GASKETS SHALL BE INSTALLED TO JOIN THE SEWER TO THE MANHOLE WALL WHEN A.B.S. COMPOSITE PIPE OR P.V.C. PIPE IS USED. FOR OTHER TYPES OF PIPE THE SEWER SHALL BE GROUTED IN PLACE WITH NON–SHRINK GROUT. THE SEWER PIPE SHALL BE SUPPORTED WITH CONCRETE ENCASEMENT A MINIMUM OF 3 FEET FROM THE MANHOLE WALL AND TO THE FIRST JOINT FOR V.C.P. SUCH THAT THE JOINT REMAINS FLEXIBLE.
4. ALL INSIDE SURFACES OF THE CONCRETE MANHOLE WHICH WOULD BE EXPOSED TO SEWER GAS SHALL BE COATED WITH 2 COATS TNEMEC SERIES 66 HI–BUILD EPOXOLINE, DRY THICKNESS OF 8 MILS (MIN.)
5. EXTERIOR MANHOLE WALLS SHALL BE COATED WITH 1 COAT MOBILARMA 633 BITUMINOUS COATING.
6. JOINT SEALING COMPOUND SHALL BE KENT SEAL NO. 2 OR APPROVED EQUAL.
7. PRECAST MANHOLES SHALL BE SET AT LEAST 4 INCHES INTO THE MANHOLE BASE.
8. TOP OF MANHOLE FLOOR SLAB SHALL BE AT LEAST 3 INCHES BELOW THE FLOW LINE OF THE OUTLET PIPE TO INSURE SUFFICIENT MINIMUM THICKNESS OF SHAPED INVERT.
9. LIFTING HOLES SHALL BE FILLED WITH NON–SHRINK GROUT AND THE INTERIOR SURFACE COATED AS SPECIFIED.
10. MORTAR USED IN MASONRY CONSTRUCTION SHALL CONTAIN 8 SACKS OF CEMENT PER CUBIC YARD. CONCRETE USED IN MANHOLE BASES SHALL CONFORM TO THE REQUIREMENTS OF CONCRETE FOR CONCRETE PAVEMENT CONSTRUCTION AS SPECIFIED IN THE CITY STANDARD PAVING SPECIFICATIONS USING CITY CONCRETE PAVEMENT MIX WITHOUT AIR ENTRAINING ADMIXTURE. MORTAR SHALL BE PLACED AROUND THE MANHOLE RING AS SHOWN ON THE DRAWINGS WHEN MANHOLES ARE CONSTRUCTED IN UNPAVED AREAS. MANHOLES CONSTRUCTED WHERE PIPE SIZES ARE SMALLER THAN 24" SHALL HAVE AN INSIDE DIAMETER OF 4'. MANHOLES CONSTRUCTED WHERE PIPE SIZES ARE 24" OR LARGER SHALL HAVE AN INSIDE DIAMETER OF 5'. COMPLETED MANHOLE SHALL BE WITHOUT LEAKS AND WATER TIGHT.
11. REINFORCING STEEL SHALL BE INSTALLED IN THE MANHOLE BASES AND SHALL CONSIST OF NO. 4 BARS PLACED ON 6" CENTERS IN BOTH DIRECTIONS. THE MANHOLE BASE REINFORCEMENT SHALL BE PLACED AT LEAST 3" ABOVE THE BOTTOM OF THE MANHOLE BASE. ALL COSTS FOR FURNISHING AND INSTALLING REINFORCING STEEL SHALL BE INCLUDED IN THE UNIT PRICE BID FOR THE MANHOLE.
12. OPENINGS SHALL BE CUT INTO THE MANHOLE WALL WHEN OUTSIDE DROPS ARE CONSTRUCTED ON EXISTING MANHOLES. SUCH OPENINGS CUT INTO EXISTING MANHOLES SHALL BE AS SMALL AS PRACTICAL TO FACILITATE INSTALLING AND GROUTING THE NEW PIPE IN PLACE. WATERSTOP GASKETS SHALL BE USED WITH P.V.C. AND A.B.S. COMPOSITE PIPE. THE NEW PIPE SHALL BE GROUTED INTO THE OPENING USING AN APPROVED NONSHRINK GROUT FOR THE FULL MANHOLE WALL THICKNESS. THE EXTERIOR OF THE COMPLETED CONNECTION SHALL BE SEALED WITH AN APPROVED BITUMINOUS COATING SUCH THAT THE CONNECTION WILL BE WATER TIGHT. FLOOR OF MANHOLE SHALL BE MODIFIED TO FORM NEW FLOW CHANNEL FOR THE NEW CONNECTION AS INDICATED BY THE DRAWING. THIS WORK, INCLUDING MODIFICATION OF MANHOLE FLOOR, SHALL BE PAID FOR AT THE UNIT PRICE BID FOR OUTSIDE DROP STACK CONSTRUCTED ON EXISTING MANHOLE.
13. THE FLOORS OF ALL MANHOLES SHALL BE SHAPED WITH FLOW CHANNELS SUCH THAT THE MANHOLES WILL BE SELF CLEANING AND FREE OF AREAS WHERE SOLIDS COULD BE DEPOSITED AS SEWAGE FLOWS THROUGH THE MANHOLE FROM ALL INLET PIPES TO THE OUTLET PIPE. FLOW CHANNELS SHALL BE FORMED TO MATCH THE BOTTOM HALVES OF THE INFLOWING PIPES AND THE OUTFLOWING PIPE AS SHOWN BY THE DRAWINGS EXCEPT FOR INSIDE DROP MANHOLES. FLOW CHANNELS FOR INSIDE DROP MANHOLES SHALL BE CONSTRUCTED AS INDICATED BY THE DRAWING. MANHOLE FLOORS SHALL HAVE SLOPES OF 3 INCHES PER FOOT IN THE AREAS OUTSIDE OF THE FLOW CHANNELS SLOPED TOWARD THE FLOW CHANNELS. PIPES LAID THROUGH MANHOLES SHALL HAVE THE TOP HALF REMOVED TO NEAT LINES FOR THE FULL INSIDE DIAMETER OF THE MANHOLE. MANHOLE FLOORS SHALL THEN BE SHAPED AROUND THE BOTTOM HALF OF THE PIPE WHICH FORMS THE FLOW CHANNEL.
14. PIPES INSTALLED WITHIN THE EXCAVATION MADE FOR THE MANHOLE SHALL BE CRADLED WITH CONCRETE TO THE LIMITS OF THE MANHOLE EXCAVATION. WHEN CLAY PIPE IS USED, THE CRADLE SHALL EXTEND TO THE FIRST JOINT OUTSIDE THE MAHOLE. THE CRADLE SHALL BE TERMINATED AT THE CLAY PIPE JOINT IN A MANNER WHICH WILL MAINTAIN THE FLEXIBILITY OF THE JOINT. COST OF CRADLE WITHIN MANHOLE EXCAVATION OR TO CLAY PIPE JOINTS ADJACENT TO MANHOLE SHALL BE INCLUDED IN THE UNIT PRICE BID FOR THE MANHOLE.
15. MANHOLE COVER CASTINGS AND MANHOLE FRAME CASTINGS SHALL CONFORM TO THE REQUIREMENTS AS INDICATED IN THE STANDARD SPECIFICATIONS AND AS SHOWN IN THE STANDARD DETAIL DRAWING.
16. THE VERTICAL DROP IN INSIDE DROP MANHOLES SHALL NOT EXCEED 2' FOR INFLOWING PIPES SIZED 12" OR SMALLER AND 2' FOR INFLOWING PIPES LARGER THAN 12". THE CROWNS OF INFLOWING PIPES SHALL NEVER BE SET LOWER THAN THE CROWN OF THE OUTFLOWING PIPE.
17. STANDARD MANHOLES AND STANDARD INSIDE DROP MANHOLES SHALL BE BID AS STANDARD MANHOLES FOR THE TYPE AND DIAMETER INDICATED. OUTSIDE DROP MANHOLES SHALL BE BID AS STANDARD OUTSIDE DROP MANHOLES FOR THE TYPE AND DIAMETER INDICATED. ALL MANHOLE DIAMETERS WILL BE 4' UNLESS INDICATED OTHERWISE.
18. A BRICK MASONRY COLLAR SHALL BE INSTALLED BETWEEN THE CAST IRON FRAME AND THE CONCENTRIC CONE. THE COLLAR WILL HAVE 8" WALLS AND A VERTICAL HEIGHT OF 6" MINIMUM AND 18" MAXIMUM. A 1" COAT OF MORTAR WILL BE PLASTERED ON THE OUTSIDE OF THE COLLAR. THE USE OF PRE–CAST CONCRETE SPACERS FOR MANHOLE TOP ADJUSTMENT IS ALSO ALLOWED.
•19. ALL MANHOLE BASE CONSTRUCTION THAT OCCURS IN THE FIELD MUST HAVE A MINIMUM OF EIGHT INCHES OF CONCRETE BELOW THE MANHOLE WALL AND THE WALL SECTION SHOULD EXTEND FOUR INCHES INTO THE BASE RESULTING IN A MINIMUM TOTAL BASE THICKNESS OF 12 INCHES. MONOLITHIC BASE SECTIONS CONSTRUCTED IN THE FACTORY AND CURED AS PER ASTM C478 MUST HAVE A MINIMUM EIGHT INCH THICK CONCRETE BASE. BASE SECTIONS CONSTRUCTED IN THE FACTORY UTILIZING A PREVIOUSLY MANUFACTURED MANHOLE WALL SECTION, AS OUTLINED IN THE ABOVE PARAGRAPH, MUST HAVE A MINIMUM BASE THICKNESS OF EIGHT INCHES WITH THE WALL SECTION EXTENDING FOUR INCHES INTO THE BASE AND BE MANUFACTURED IN COMPLIANCE WITH ASTM C478.

PAWNEE MESA ADDITION
SANITARY SEWER EXTENSIONS
LATERAL 16, MAIN 13, SOUTHWEST INTERCEPTOR

Revised Manhole Base See Note 19

THE CITY OF WICHITA

CITY ENGINEER'S OFFICE
CITY HALL – SEVENTH FLOOR
455 NORTH MAIN STREET
WICHITA, KANSAS 67202
(316) 268-4518 FAX

STANDARD TYPE 'P' MANHOLES

M. E. LINDEBAK P.E. – CITY ENGINEER

PROJECT NUMBER	INDEX CODE
468-82701	743096
DATE	SHEET 5 OF 8
MAR 96	

F:\APPS\ACAD\R22\BASE Thu Jun 12 14:43:25 1997 Steve Schmidt-Poe & Assoc.

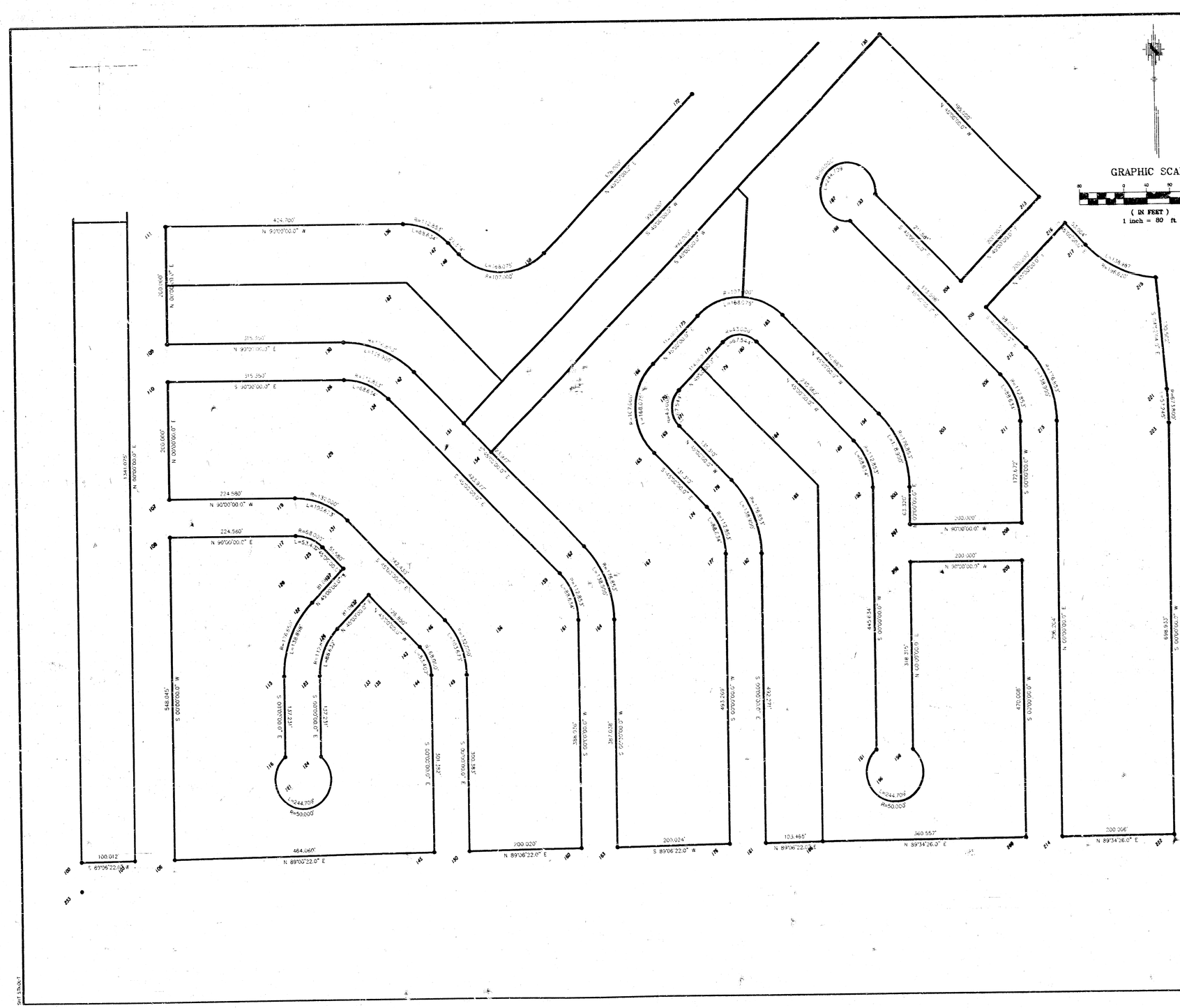
GRAPHIC SCALE
80 0 40 80 160
(IN FEET)
1 inch = 80 ft
N 90°00'00.0" W
424.700'
R=1125.92'
L=658.24'
L=649.07'
R=1107.00'
N 90°00'00.0" E
315.350'
S 90°00'00.0" E
224.580'
R=130.00'
L=41.93'
R=68.00'
L=53.12'
S 45°00'00.0" E
S 00°00'00.0" E
250.000'
1341.075'
548.045'
100.012'
S 89°06'22.0" W
464.060'
N 89°06'22.0" E
200.020'
R=1168.75'
L=1168.75'
R=1137.00'
L=1137.00'
R=1175.00'
L=1175.00'
R=1175.00'
L=1175.00'
R=1168.75'
L=1168.75

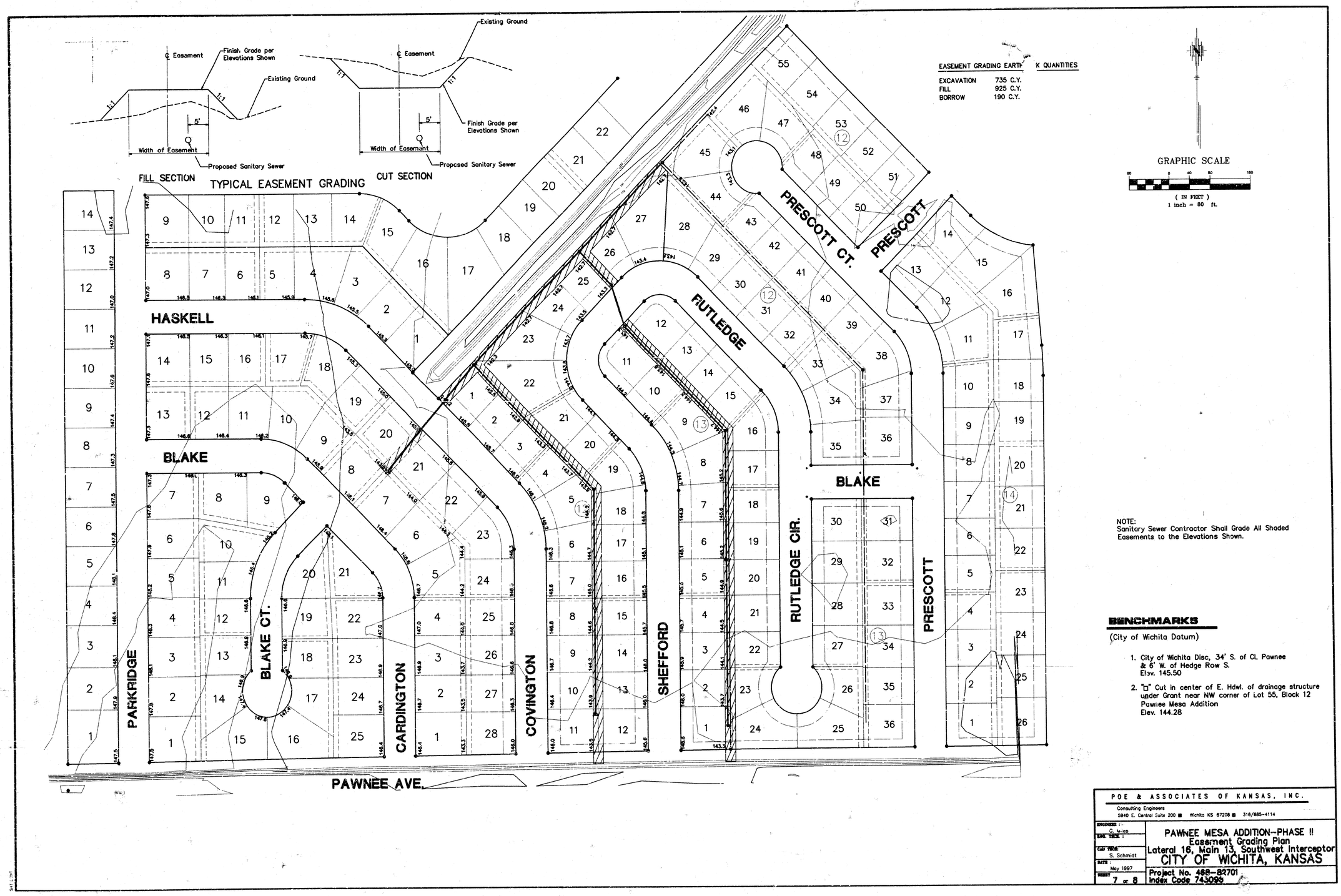

NOTE:
Sanitary Sewer Contractor Shall Grade All Shaded Easements to the Elevations Shown.

BENCHMARKS

(City of Wichita Datum)

1. City of Wichita Disc, 34' S. of CL Pawnee & 6' W. of Hedge Row S. Elev. 145.50
2. "□" Cut in center of E. Hdwl. of drainage structure under Grant near NW corner of Lot 55, Block 12 Pawnee Mesa Addition Elev. 144.28

POE & ASSOCIATES OF KANSAS, INC.
Consulting Engineers
5940 E. Central Suite 200 ■ Wichita KS 67208 ■ 316/685-4114

ENGINEER: G. Miles
ENG. TECH.:
CAD TECH.: S. Schmidt
DATE: May 1997
SHEET 7 of 8

PAWNEE MESA ADDITION-PHASE II
Easement Grading Plan
Lateral 16, Main 13, Southwest Interceptor
CITY OF WICHITA, KANSAS
Project No. 468-82701
Index Code 743096

FINAL PLAT OF

PAWNEE MESA ADDITION

AN ADDITION TO SEDGWICK COUNTY, KANSAS

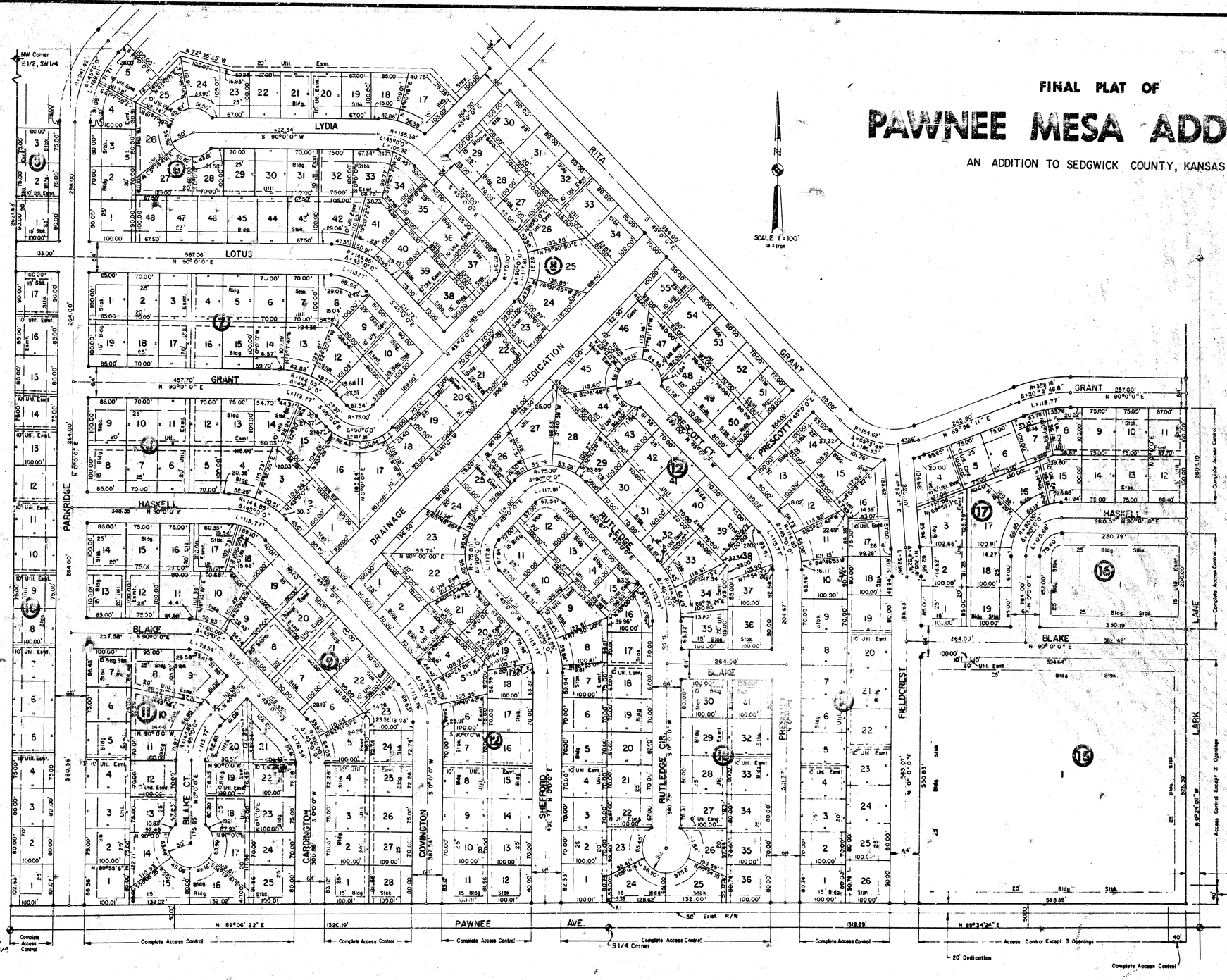

NE Corner
W 1/2, SE 1/4
Sec. 31, T27S, R/W

This plat of "Pawnee Mesa Addition" has been submitted to and approved by the Wichita-Sedgwick County Metropolitan Area Planning Commission, Wichita, Kansas.

Dated this 31st day of JANUARY, 1980.

Wichita-Sedgwick County Metropolitan Area Planning Commission

Michael J. Sawina, Chairman

Robert A. Lakin, Secretary

This plat approved and all dedications shown hereon, if any, accepted by the City Commission of the City of Wichita, Kansas this 11th day of MARCH, 1980.

Tony Casado, Mayor

Donald C. Gisick, City Clerk

Entered on transfer record this 25 day of March, 1980.

Dorothy K. White, County Clerk

This plat approved and all dedications shown hereon, if any, accepted by the Board of County Commissioners of Sedgwick County, Kansas this 24 day of March, 1980.

Everett Patrick, Chairman

Tom Scott, Commissioner

Donald E. Gragg, Commissioner

Attest: Dorothy K. White, County Clerk

State of Kansas, County of Sedgwick, as: #482954

This is to certify that this instrument was filed for record in the Register of Deeds Office at 2:00PM on the 25th day of MARCH, 1980.

Bette F. McCart, Register of Deeds

Pat Kettler, Deputy

SW Corner E 1/2 SW 1/4

SE Corner W 1/2 SE 1/4 Sec 31, T 27 S, R/W

SHEET8 of 8

70-40-60-41