CONSTRUCTION PLANS FOR

MAIN 15 SOUTHWEST INTERCEPTOR SEWER

NEAR RIDGE ROAD, FROM 13TH TO 21ST STREET NORTH

PROJECT NO.

468-76-245-81618-000-000-001

CITY OF WICHITA, KANSAS

MICHAEL E. LINDEBAK, CITY ENGINEER

JULY 1987

PHASE I & STA. 0+00 to STA. 72+92.7 LINE I

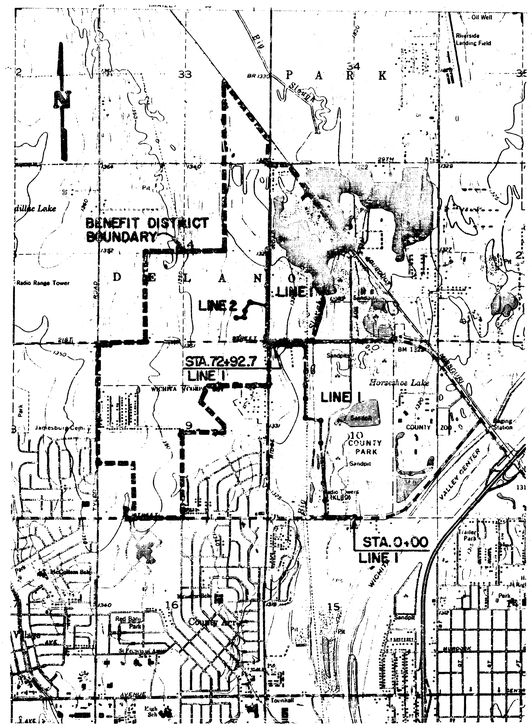

KEY MAP

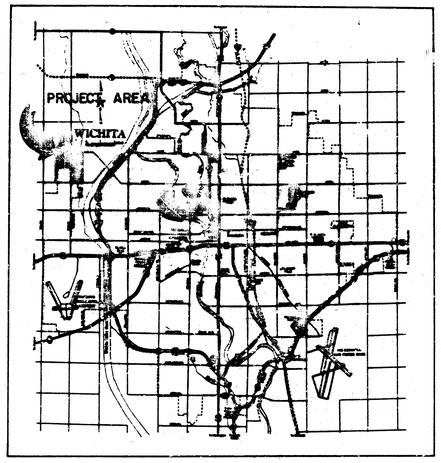

LOCATION MAP

INDEX TO DRAWINGS

SHEET NO.	DESCRIPTION
1	TITLE SHEET
2	GENERAL NOTES & DETAILS
3	BASELINE DATA SHEET
4-10	PLAN & PROFILE - LINE 1
11	TYPE "P" MANHOLE
12	TYPE "D" MANHOLE

AS BUILT
ROL
7-88

DALTON C. HOSTETLER
LICENSED
5532
KANSAS
PROFESSIONAL ENGINEER

SOUTH... ...TOR
SEWER
CONSTRUCTION PLANS

Design: DCH
Drawn by: DPR
Checked by: KHB
Date: MAY 1987
Job no:

MID-KANSAS ENGINEERING CONSULTANTS PA
3500 NORTH ROCK ROAD
BUILDING #800
WICHITA, KANSAS 67226
682-6561

Sheet 1 of 12

FILMED FROM THE BEST AVAILABLE COPY

· GENERAL NOTES ·

1. ALL CONSTRUCTION AND MATERIALS TO COMPLY WITH CITY OF WICHITA SPECIFICATIONS AND STANDARDS.

2. INTERURBAN TRAFFIC GENERATED OUTSIDE THE PROJECT AREA AND LOCAL TRAFFIC GENERATED WITHIN THE PROJECT AREA ARE TO BE CARRIED THROUGH CONSTRUCTION ON EXISTING ROADWAYS AT ALL TIMES. VEHICULAR ACCESS TO ALL DWELLINGS IN THE PROJECT AREA SHALL BE PROVIDED AT ALL TIMES. THE CONTRACTOR SHALL ERECT WARNING SIGNS, FLASHING LIGHTS, AND BARRICADES IN COMPLIANCE WITH THE STANDARD SPECIFICATIONS.

3. THE CONTRACTOR SHALL LIMIT THE EXTENT OF TRENCH TO REMAIN OPEN OVERNIGHTS AND WEEKENDS TO LESS THAN 50 FEET.

4. THE CONTRACTOR WILL BE REQUIRED TO PROVIDE A MINIMUM ADVANCE NOTICE OF FORTY EIGHT (48) HOURS TO UTILITY AND PIPELINE COMPANIES PRIOR TO STARTING ANY EXCAVATION AS FOLLOWS:

KANSAS ONE-CALL	1-800-344-7233

THE CONTRACTOR MUST NOTIFY THE FOLLOWING IN CASE OF AN EMERGENCY:

CABLEVISION	262-4270 or 263-2961
K.P. & L. GAS SERVICE COMPANY	263-7511
KANSAS GAS & ELECTRIC	264-1141
ARKLA GAS COMPANY	942-8350 or 263-8161
ARKLA ENERGY RESOURCES	942-0811 or 318-227-2565
SOUTHWESTERN BELL TELEPHONE COMPANY	1-571-2611
CITY OF WICHITA WATER DEPARTMENT	268-4908
CITY OF WICHITA SEWER MAINTENANCE	268-4071
PHILLIPS PIPELINE CO.	838-6812 or 918-661-4550
PHOENIX TRANSMISSION CO.	262-1443

5. UNDERGROUND UTILITY SERVICE LINES AND OVERHEAD UTILITY POLE LINES ARE TO BE ADJUSTED AS NECESSARY BY OTHERS PRIOR TO CONSTRUCTION UNLESS THE PLANS SPECIFICALLY CALL FOR THEIR ADJUSTMENT BY THE CONTRACTOR OR UNLESS THE PLANS SPECIFICALLY IDENTIFY A UTILITY TO BE ADJUSTED BY ITS OWNER DURING CONSTRUCTION. EXISTING UTILITIES AND THEIR LOCATION, AS SHOWN ON THE PLANS, REPRESENT THE BEST INFORMATION OBTAINABLE FOR DESIGN. THE CONTRACTOR WILL BE REQUIRED TO WORK AROUND EXISTING UTILITIES WITHIN THE RIGHT-OF-WAY WHICH DO NOT CONFLICT WITH PROPOSED CONSTRUCTION.

6. THE CONTRACTOR SHALL RESTORE ALL DITCHES, CHANNELS, BANK STABILIZATION, SWALES, ROAD SHOULDERS, PAVEMENT ENTRANCES, AND BANKS TO THEIR ORIGINAL SLOPES AND GRADES. WHERE EXISTING ENTRANCE PIPE, DRAINAGE PIPE, SPRINKLER SYSTEMS, SIDEWALKS, DRIVES, SIGNS, FENCES, ETC., CONFLICT WITH THE PROPOSED WORK HEREIN THEY SHALL BE REMOVED AND REPLACED OR RESET IN LIKE KIND. ALL OF THE ABOVE INCLUDING TREES, SHRUBS, GRASS, SOD AND OTHER LANDSCAPING, WHERE NOTED SHALL BE CONSIDERED SUBSIDIARY TO THE PRICE BID FOR SITE RESTORATION.

7. TREES AND SHRUBS IN THE PUBLIC RIGHT-OF-WAY WHICH ARE IN DIRECT CONFLICT WITH PROPOSED NEW CONSTRUCTION SHALL BE REMOVED BY THE CONTRACTOR WITH THE ENGINEER'S APPROVAL. TREES AND SHRUBS WHICH ARE NOT IN DIRECT CONFLICT WITH PROPOSED NEW CONSTRUCTION SHALL BE SAVED AND PROTECTED FROM DAMAGE.

8. RUBBLE FROM THE REMOVAL OF MISCELLANEOUS STRUCTURES, DEBRIS AND EXCESS EXCAVATION WHICH IS TO BE WASTED SHALL BE DISPOSED OF ON SITES TO BE PROVIDED BY THE CONTRACTOR. THESE SITES SHALL BE APPROVED BY THE ENGINEER AS TO SUITABILITY, APPEARANCE AND SITE LOCATION. LOCATIONS THAT, IN THE OPINION OF THE ENGINEER, WILL LEAVE AN UNSIGHTLY APPEARANCE WILL NOT BE APPROVED.

9. POSITIVE DRAINAGE SHALL BE PROVIDED FOR ALL AREAS ON OR NEAR SPOIL AREAS. NATURAL DRAINAGE WAYS SHALL BE MAINTAINED.

10. WHERE REMOVAL OF EXISTING FENCES NEXT TO THE CONSTRUCTION IS DEEMED NECESSARY BY THE CONTRACTOR, THE CONTRACTOR SHALL COORDINATE REMOVAL WITH ADJACENT PROPERTY OWNERS. ALL REMOVAL AND RESETTING OF FENCES SHALL BE CONSIDERED SUBSIDIARY TO SITE PREPARATION AND SITE RESTORATION, RESPECTIVELY.

11. THE CONTRACTOR SHALL BE RESPONSIBLE FOR PRESERVING PROPERTY IRONS. THE CONTRACTOR SHALL BE REQUIRED TO RE-ESTABLISH ANY PROPERTY IRONS WHICH ARE DAMAGED OR DESTROYED BY HIS CONSTRUCTION OPERATIONS. SUCH IRONS SHALL BE RE-ESTABLISHED BY A LICENSED LAND SURVEYOR OR A LICENSED PROFESSIONAL ENGINEER IN ACCORDANCE WITH STATE LAWS.

12. THE CONTRACTOR SHALL BE RESPONSIBLE FOR MAINTAINING CONTINUOUS FLOW FOR SEWAGE THROUGH CONSTRUCTION. CONTRACTOR'S PROPOSED METHOD FOR MAINTAINING SEWAGE FLOW SHALL BE APPROVED BY THE ENGINEER. COST OF MAINTAINING SEWAGE FLOW THROUGH CONSTRUCTION SHALL BE CONSIDERED SUBSIDIARY TO THE OTHER ITEMS OF WORK.

13. ALL ELEVATIONS SHOWN ARE CITY OF WICHITA DATUM.
CITY DATUM = USGS MSL -1187.4

14. A SAW CUT OF AT LEAST ONE-HALF THE DEPTH OF EXISTING SURFACE COURSES OR ONE-FOURTH THE DEPTH OF THE EXISTING TOTAL PAVEMENT THICKNESS SHALL BE PROVIDED AT LOCATIONS WHERE PROPOSED CONSTRUCTION ABUTS AN EXISTING SURFACE COURSE OR PAVEMENT FOR WHICH PARTIAL REMOVAL OF THAT SURFACE OR PAVEMENT IS REQUIRED. SUCH SAW CUTS WILL NOT BE PAID FOR DIRECTLY AND THIS COST SHALL BE CONSIDERED AS SUBSIDIARY TO THE PRICE BID FOR SITE PREPARATION.

15. ALL COSTS FOR REMOVAL AND REPLACEMENT OF EXISTING PAVEMENT SHALL BE CONSIDERED SUBSIDIARY TO THE PRICE BID FOR SITE PREPARATION AND SITE RESTORATION, RESPECTIVELY. REMOVAL OF EXISTING PAVEMENT AND/OR REPLACEMENT OF EXISTING PAVEMENT SHALL CONFORM TO THE APPLICABLE SECTIONS OF THE CITY OF WICHITA STANDARD SPECIFICATIONS. MINIMUM LIMITS OF SUCH PAVEMENT REMOVAL AND REPLACEMENT SHALL BE ONE FOOT BEYOND THE LIMITS OF THE EXCAVATION MADE FOR THE SEWER OR THE STRUCTURE, OR TO EXISTING PAVEMENT JOINT IF IT IS THREE FEET OR LESS BEYOND THE MINIMUM LIMITS.

16. ~~MAILBOXES WITHIN THE LIMITS OF THE PROJECT SHALL BE REMOVED AND REPLACED BY THE CONTRACTOR AS APPROVED BY THE ENGINEER. CONTRACTOR WILL BE REQUIRED TO MAKE SATISFACTORY PROVISIONS FOR MAIL DELIVERY TO PROPERTIES AFFECTED BY THIS PROJECT DURING ITS CONSTRUCTION.~~

17. THE CONTRACTOR SHALL GIVE ALL PROPERTY OWNERS AND/OR TENANTS OF PROPERTY DIRECTLY AFFECTED BY THE CONSTRUCTION OF THIS PROJECT A MINIMUM OF 10 DAYS ADVANCE NOTICE PRIOR TO START OF CONSTRUCTION.

18. THE COST OF CONCRETE ENCASEMENTS AND CONCRETE CRADLES, SHALL BE CONSIDERED SUBSIDIARY TO THE PRICE BID FOR SEWER PIPE INSTALLATION.

19. ALTERNATE FOR TYPE "D" MANHOLE INTERIOR LINING: IN LIEU OF T-LOCK LINER REQUIRED BY CITY OF WICHITA SPECIFICATIONS AND DRAWINGS, THEMEC SERIES 66 EPOXOLINE, OR APPROVED EQUAL, MAY BE USED.

SURFACE PREPARATION: SURFACES TO BE PAINTED SHALL BE DRY AND FREE OF DIRT, DUST, SAND, GRIT, MUD/OIL, GREASE, RUST, OR OTHER OBJECTIONABLE SUBSTANCES. CLEANING AND PAINTING OPERATIONS WILL BE PERFORMED IN A MANNER WHICH WILL PREVENT DUST OR OTHER CONTAMINANTS FROM GETTING ON FRESHLY PAINTED SURFACES. OIL AND GREASE SHALL BE COMPLETELY REMOVED BY USE OF SOLVENTS OR DETERGENTS BEFORE MECHANICAL CLEANING IS STARTED. SURFACES SHALL BE FREE OF CRACKS, PITS, PROJECTIONS, OR OTHER IMPERFECTIONS WHICH WOULD PREVENT THE FORMATION OF A SMOOTH, UNBROKEN PAINT FILM. THE SURFACE SHALL THEN BE CLEANED IN ACCORDANCE WITH SPECIFICATION SSPC-SP7 (BRUSH-OFF BLAST CLEANING.)

INSTALLATION: APPLY ONE INTERMEDIATE AND ONE FINAL COATINGS OF EPOXY PAINT. PAINT PREPARATION & APPLICATION SHALL BE AS RECOMMENDED BY THE MANUFACTURER. PAINT FILM WITH SAGS, CHECKS, BLISTERS, AND OTHER IMPERFECTIONS SHALL BE REMOVED AND THE SURFACE REPAINTED. THICKNESS SHALL BE 9.0 - 10.5 WET MILS AND 4.0 - 6.0 DRY MILS PER COAT.

20. WHERE SHOWN ON DRAWINGS, GASKETED MANHOLE LIDS SHALL BE INSTALLED WITH REPLACEABLE RUBBER O-RING SELF-SEALING GASKETS. PROVIDE ONE SPARE GASKET FOR EACH MANHOLE FRAME AND COVER INSTALLED. DO NOT INSTALL GASKETS UNTIL AFTER FINAL INSPECTION.

21. ALL EXISTING GRASSED AREAS WHICH ARE DISTURBED OR DAMAGED DURING CONSTRUCTION OPERATIONS SHALL BE RESTORED TO ORIGINAL CONDITIONS AND RESEEDED IN LIKE KIND, UNLESS OTHERWISE NOTED ON THE PLANS. COSTS SHALL BE CONSIDERED SUBSIDIARY TO THE PRICE BID FOR SITE RESTORATION. APPLICATION RATE FOR THE VARIOUS SEED MIXTURES SHALL BE AS APPROVED BY THE ENGINEER. SEEDING SHALL CONFORM TO APPLICABLE REQUIREMENTS OF STANDARD SPECIFICATIONS.

22. SLOPES STEEPER THAN 10 TO 1 SHALL BE MULCHED AS REQUIRED BY STANDARD SPECIFICATIONS. COST OF MULCHING SHALL BE INCLUDED IN PRICE BID FOR SITE RESTORATION.

23. NOTIFY SEDGWICK CO. PARK SUPT., WARREN DUSCHER, 943-0192, A MINIMUM OF TEN DAYS BEFORE START OF CONSTRUCTION.

24. UNINTERRUPTED OPERATION OF THE EMERGENCY COMMUNICATIONS FACILITIES (LOCATED IN SEDGWICK COUNTY PARK) WILL BE MAINTAINED. THESE FACILITIES SHALL BE PROTECTED AGAINST ANY DISRUPTION OF SERVICE THROUGH POWER LOSS OR DAMAGE TO UTILITIES, EQUIPMENT AND STRUCTURE. THE UNDERGROUND COPPER WIRE COUNTERPOISE SURROUNDING THE RADIO TOWER IS NON-OPERATIONAL. BEFORE EXCAVATION, THE COUNTERPOISE WIRE SHALL BE CUT IN SUCH A WAY THAT WILL PREVENT DAMAGE TO THE TOWER AND EQUIPMENT. COORDINATE ALL CONSTRUCTION IN THIS AREA WITH EMERGENCY COMMUNICATIONS REPRESENTATIVE BOB BUSBY 268-7081.

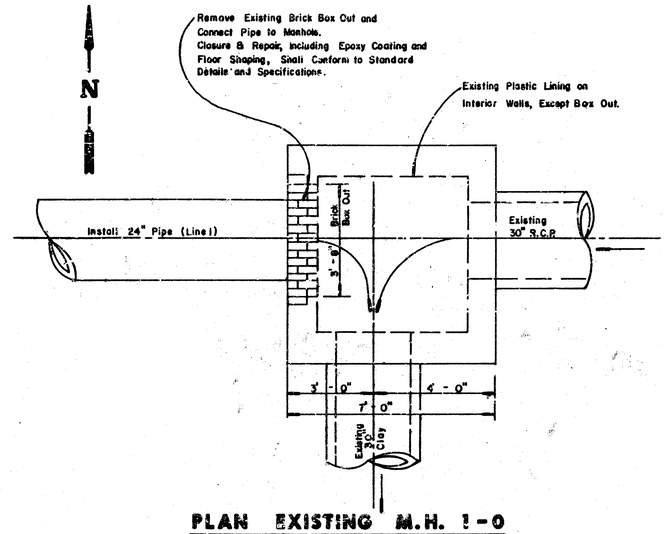

PLAN EXISTING M.H. 1-0

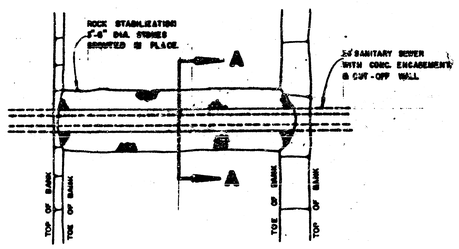

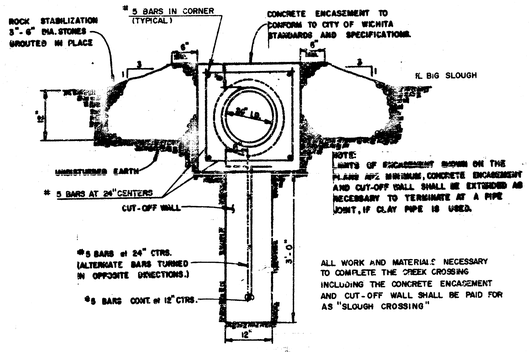

BIG SLOUGH CROSSING & CONCRETE ENCASE W/ CUT-OFF WALL

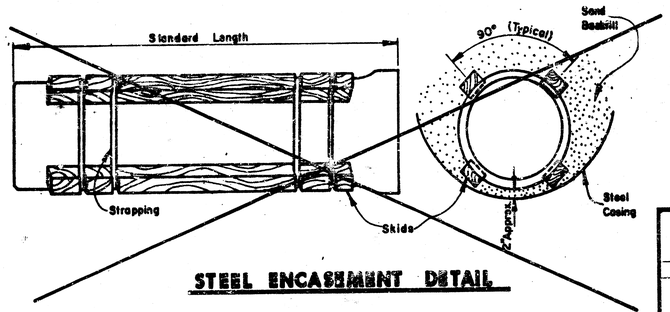

STEEL ENCASEMENT DETAIL

TREE LEGEND

- Evergreen (Cedar)
- Leaf Bearing
- Tree Removal

MAIN 15

GENERAL NOTES AND DETAILS

Design: DCH
Drawn by: DPR
Checked by: KHB
Date: MAY, 1987
Job no:

JAID-KANSAS ENGINEERING CONSULTANTS PA
3500 NORTH ROCK ROAD
BUILDING #808
WICHITA, KANSAS 67226
682-6561

Sheet 2 of 12 2/12

FILMED FROM THE BEST AVAILABLE COPY....

BASELINE "A"

P.I. No.	BASELINE	COORDINATES NORTH	COORDINATES EAST	BEARING	DISTANCE (FT.)	REFERENCE TIES
#1	1+00.00	5021.56	7619.11			S. ¼ cor. 10-27S-1W 5/8" Rebar in thimble 3 Concrete Nails in North side of 3rd fence post E. of fence corner 69.40'S.E. 40d & DISC in E. side P.P. 46.94'S. Center of 3" pipe mailbox post (E. pipe of mailbox 38.90'S.W.) Line of fence to South Apparent centerline 13th Street 16.4 ± North
				S 89° 31' 43" W	776.14	
#2	8+76.14	5015.17	6843.00			Concrete Nail & DISC R.R. Spike in N. Side P.P. 128.44'E.S.E. 40d & DISC in Side P.P. 145.27'E.N.E. Apparent centerline 13th 11.5 ± North
				N 07° 21' 57" W	640.74	
#3	15+16.88	5650.63	6760.85			5/8" rebar and cap
				N 03° 06' 15" W	412.84	
#4	19+29.72	6062.86	6730.50			5/8" rebar and cap
				N 06° 29' 49" W	1179.88	
#5	31+09.58	7235.16	6605.00			5/8" rebar and cap
				N 00° 41' 43" W	668.32	
#6	37+77.90	7902.41	6596.89			5/8" rebar and cap
				N 72° 48' 18" E	413.16	
#7	41+91.06	8025.55	6202.19			5/8" rebar and cap
				N 00° 32' 28" W	2236.72	
#8	64+27.79	10262.18	6181.97			Concrete Nail & DISC R.R. Spike in N.W. side of W. Leg of "H" Pole structure 52.71'S.S.W. 40d & DISC in N.W. side P.P. (6' above ground) 123.79'N.E. 40d & DISC in N.E. side P.P. (6' above ground) 169.40'N.W.
				S 89° 26' 57" W	1223.69	
#9	76+51.48	10250.41	4957.42			Corner of sections 3-4-9-10 T27S-R1W 1" iron pipe in thimble "X" cut on curb 65.97'N.E. "X" cut on curb 59.10'N.W. "X" cut on curb 86.04'S.W. "X" cut on curb 74.90'S.E.
				N 00° 12' 47" W	711.56	
#10	83+63.04	10961.97	4954.78			Concrete Nail & DISC Center SW cor of pipe fence 36.75' NE RR Spike in N side PP 39.70'ESE 40d & DISC in S side PP 42.25'SW
				N 00° 12' 47" W	1922.94	
#11	102+85.98	12884.90	4947.63			East ¼ Corner 4-27S-1W Iron in thimble "X" cut on R.C.B. 175.0'N.E. "X" cut on R.C.B. 175.0'N.W. 3 Nails in fence post 41.0'S.S.W. Line of fence to West
				N 00° 13' 16" E	2624.52	
#11a	129+10.50	15509.40	4957.76			N.E. corner 4-27S-1W Iron in thimble 3 nails in top of corner post 46.55'N.W. 3 nails in top of corner post 53.20'S.W. Center of steel fence corner post 42.8'S.E. 3 nails in P.P. 47.0'N.E.

BASELINE "B"

P.I. No.	BASELINE	COORDINATES NORTH	COORDINATES EAST	BEARING	DISTANCE (FT.)	REFERENCE TIES
#10	0+00.00	10961.97	4954.78			Concrete Nail & DISC Center SW cor. of pipe fence 36.75' NE RR Spike in N side of P.P. 39.70' ESE 40d & DISC in S side of P.P. 42.25' SW
				N 57° 23' 37" W	598.84	
#12	5+98.84	11287.36	4449.85			5/8" rebar and cap
				S 30° 49' 03" W	283.66	
#13	8+82.50	11040.32	4304.53			5/8" rebar and cap
				S 00° 12' 47" E	170.00	
#14	10+52.50	10870.32	4305.16			5/8" rebar and cap
				S 89° 06' 39" W	250.00	
#15	13+02.50	10866.44	4055.19			5/8" rebar and cap at property corner

BASELINE "C"

P.I. No.	BASELINE	COORDINATES NORTH	COORDINATES EAST	BEARING	DISTANCE (FT.)	REFERENCE TIES
#9	0+00.00	10250.41	4957.42			Corner of sections 3-4-9-10 T27S-R1W 1" iron pipe in thimble "X" cut on curb 65.97'N.E. "X" cut on curb 59.10'N.W. "X" cut on curb 86.04'S.W. "X" cut on curb 74.90'S.E.
				S 89° 06' 38" W	400.01	
#16	4+00.01	10244.21	4557.46			Concrete Nail & DISC Concrete Nail & DISC at end of median of West Bound left turn lane 59.61'S.W. "+" cut on center of face of curb inlet 26.03'N.W. "+" cut on center of face of curb inlet 84.60'S.E. Face of N. curb 21st Street 19.75'N.
				S 00° 26' 56" E	1214.52	
#17	16+14.53	9029.73	4566.98			5/8" Bar & Cap 40d & DISC in N.W. side of fence corner post 129.1'N.E. North-South fence 100.0'East R.R. Spike in N. side P.P. 120.5'S.E.
				S 89° 06' 31" W	2215.27	
#18	38+29.80	8996.27	2351.98			5/8" rebar + cap
				S 00° 39' 51" E	1384.52	
#19	52+14.34	7610.82	2368.03			1/2" Bar & Cap at property corner
				N 89° 06' 54" E	1144.97	
#20	63+59.31	7628.51	3512.86			1/2" Bar & Cap at property corner

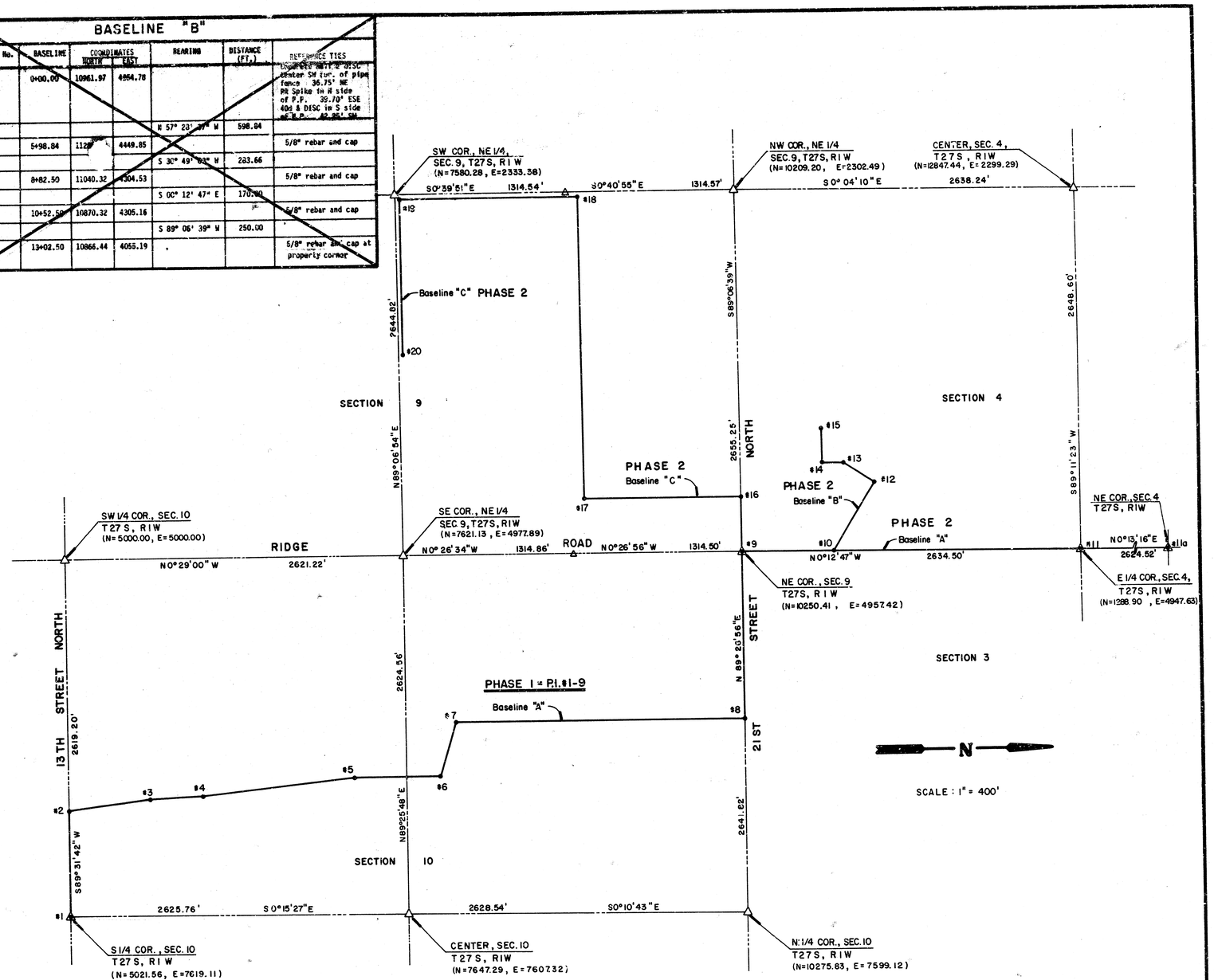

BASELINE MAP

MAIN 15

BASELINE DATA SHEET

Design: DCH
Drawn by: DPR
Checked by: KHB
Date: MAY 1987
Job no:

MID-KANSAS ENGINEERING CONSULTANTS PA
3500 NORTH ROCK ROAD
BUILDING #900
WICHITA, KANSAS 67226
682-6561

Sheet 3 of 12

FILMED FROM THE BEST AVAILABLE COPY

CITY OF WICHITA
MAIN 15
SOUTHWEST INTERCEPTOR SEWER

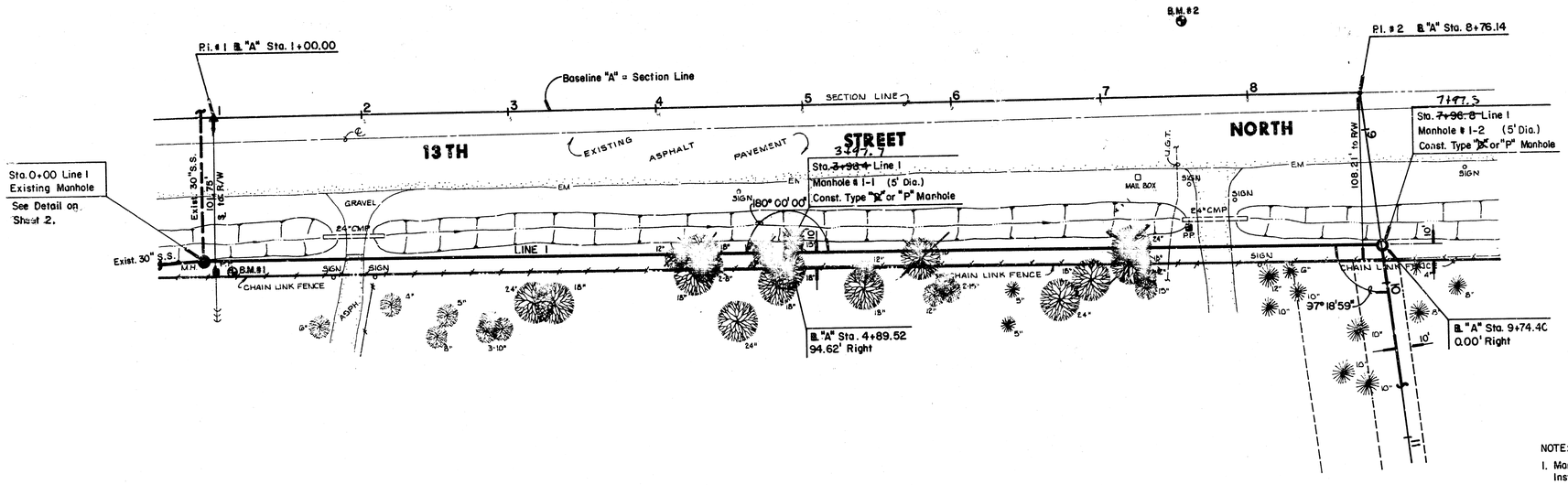

NOTE:
1. Manhole #1-1, #1-2
Install rubber gasket self-sealing lid.

B.M. #1 City of Wichita Bench Mark Disc 100'N.& 10' W. of South 1/4 Cor. Sec. 10-27S-1W
Elev. = 127.425

B.M. #2 R.R. Spike In N. Side P.P. on South Side 13th At North Shore Boulevard. 48.19' LT of Baseline "A" Sta. 7+57.07
Elev. = 129.41

PLAN - LINE 1

PROFILE - LINE 1

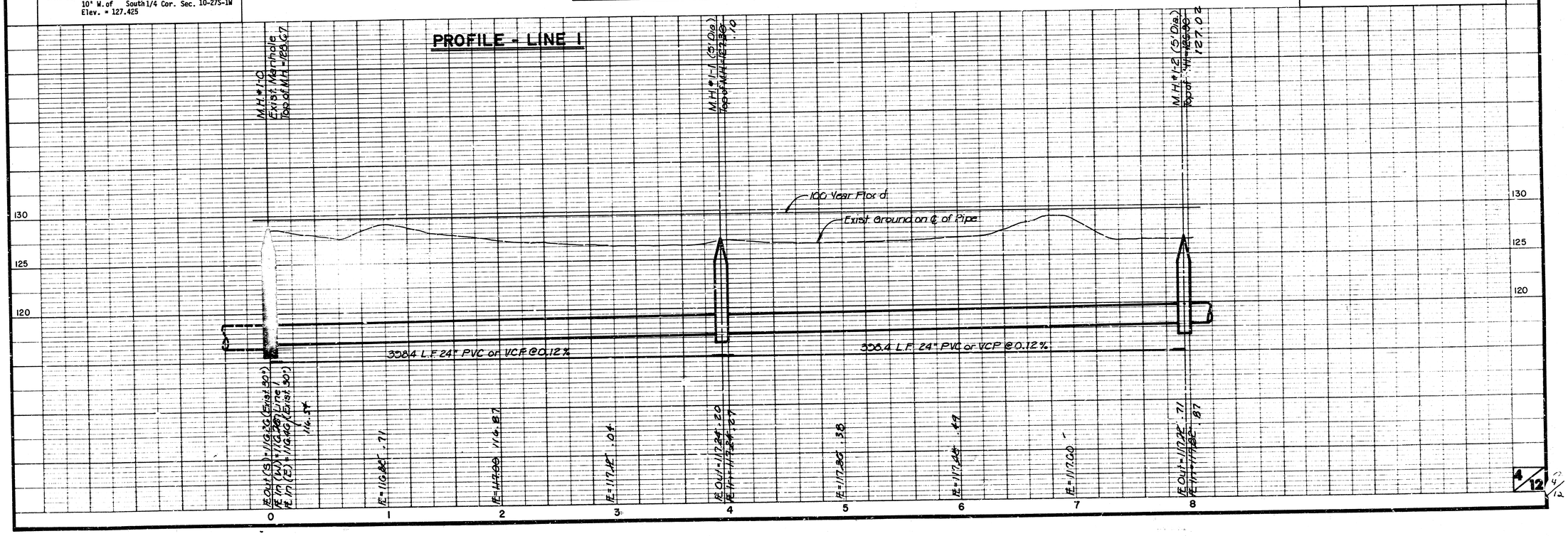

FILMED FROM THE BEST AVAILABLE COPY....

CITY OF WICHITA
MAIN 15
SOUTHWEST INTERCEPTOR SEWER

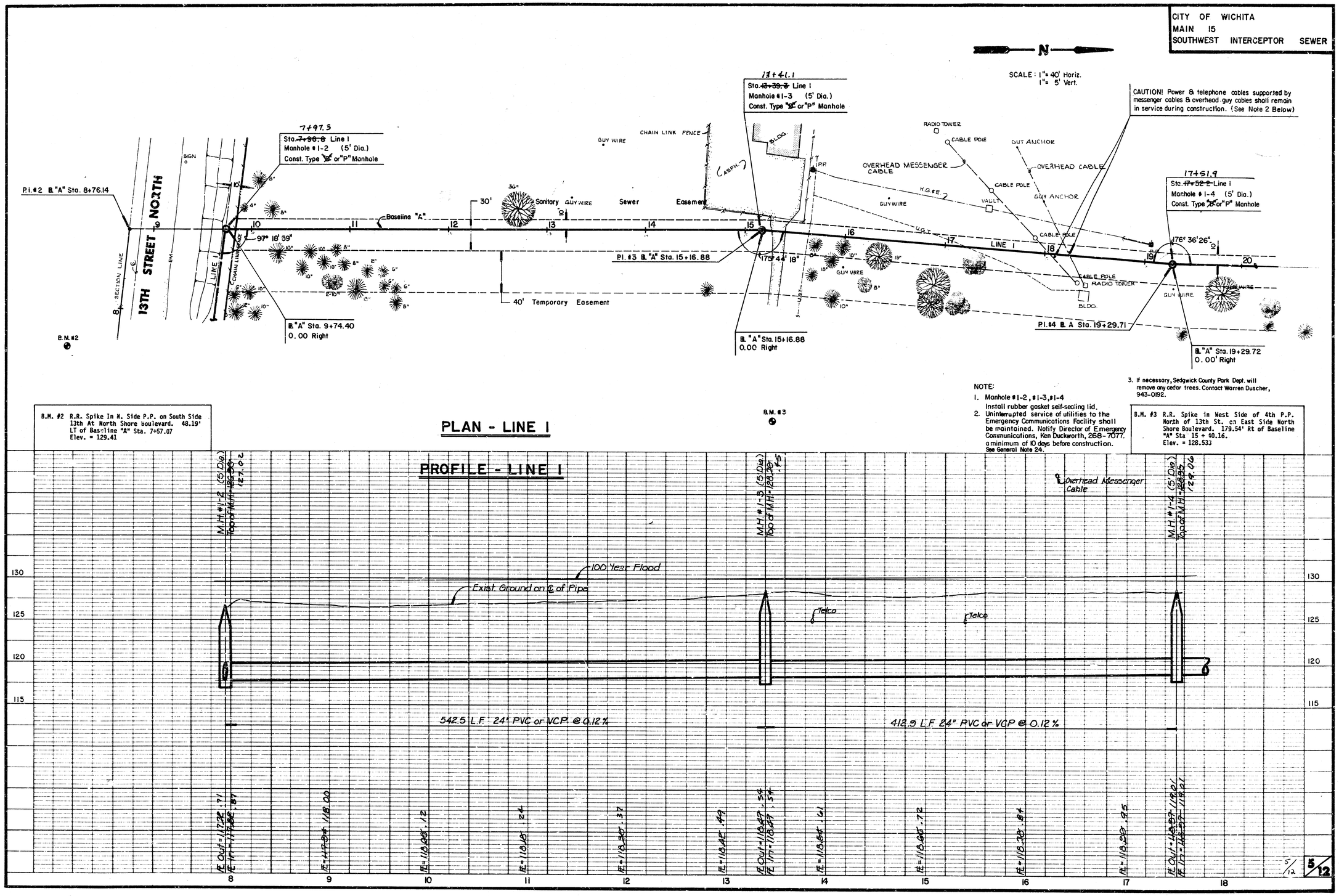

NOTE:
1. Manhole #1-2, #1-3, #1-4
Install rubber gasket self-sealing lid.
2. Uninterrupted service of utilities to the Emergency Communications Facility shall be maintained. Notify Director of Emergency Communications, Ken Duckworth, 268-7077. a minimum of 10 days before construction. See General Note 24.
3. If necessary, Sedgwick County Park Dept. will remove any cedar trees. Contact Warren Duscher, 943-0192.

B.M. #2 R.R. Spike In N. Side P.P. on South Side 13th At North Shore boulevard. 48.19' LT of Baseline "A" Sta. 7+57.07 Elev. = 129.41

B.M. #3 R.R. Spike in West Side of 4th P.P. North of 13th St. on East Side North Shore Boulevard. 179.54' Rt of Baseline "A" Sta 15 + 40.16. Elev. = 128.533

PLAN - LINE 1

5/12

FILMED FROM THE BEST AVAILABLE COPY ....

CITY OF WICHITA
MAIN 15
SOUTHWEST INTERCEPTOR SEWER

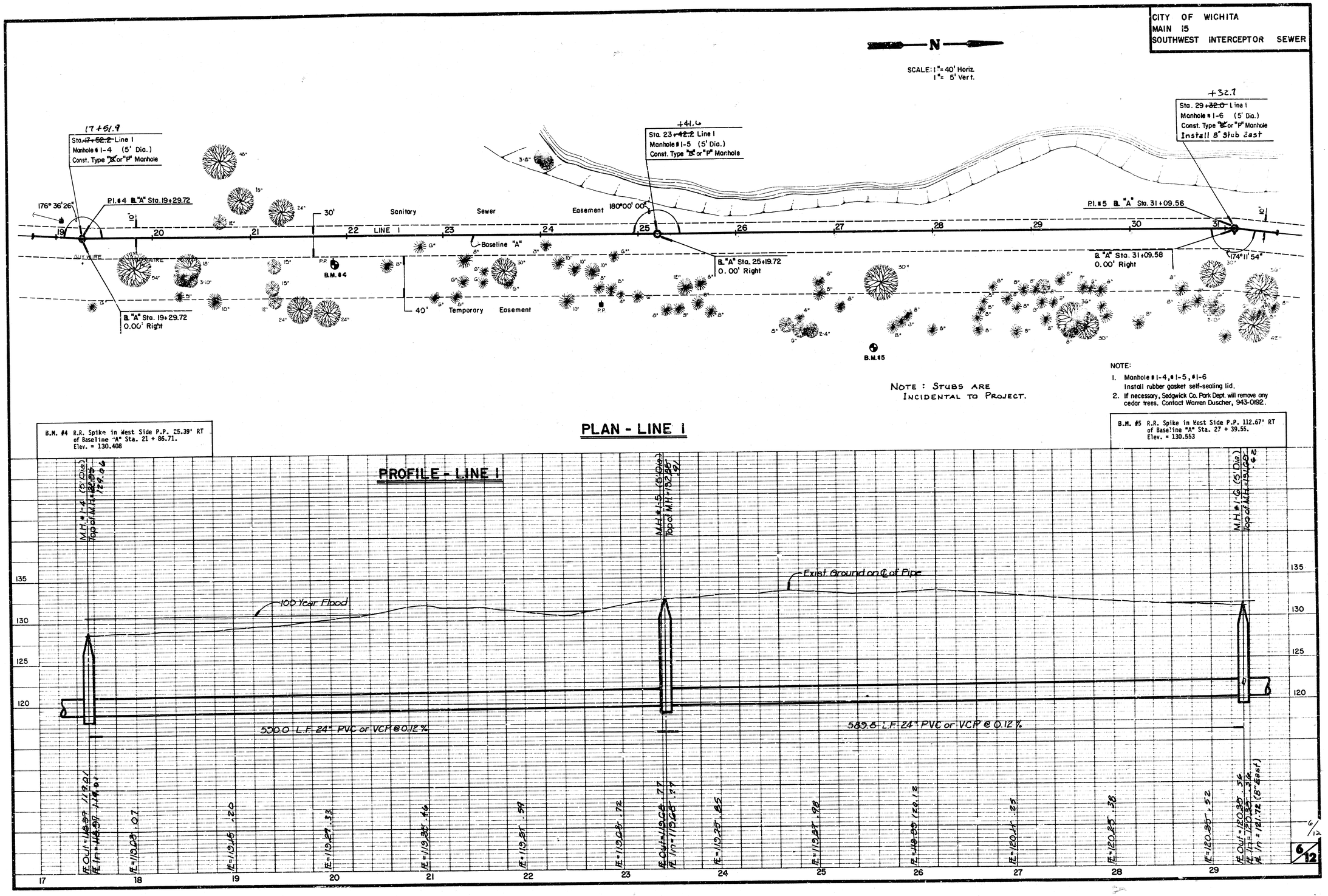

NOTE: STUBS ARE INCIDENTAL TO PROJECT.

NOTE:
1. Manhole # 1-4, # 1-5, # 1-6
Install rubber gasket self-sealing lid.
2. If necessary, Sedgwick Co. Park Dept. will remove any cedar trees. Contact Warren Duscher, 943-0192.

B.M. #4 R.R. Spike in West Side P.P. 25.39' RT of Baseline "A" Sta. 21 + 86.71. Elev. = 130.408

B.M. #5 R.R. Spike in West Side P.P. 112.67' RT of Baseline "A" Sta. 27 + 39.55. Elev. = 130.553

PLAN - LINE 1

PROFILE - LINE 1

6/12

FILMED FROM THE BEST AVAILABLE COPY....

CITY OF WICHITA
MAIN 15
SOUTHWEST INTERCEPTOR SEWER

P.I. #5 B."A" Sta. 31+09.58

B."A" Sta. 31+09.58
0.00' Right

+32.7
Sta. 29+~~32.0~~ Line I
Manhole #I-6 (5' Dia.)
Const. Type "S" or "P" Manhole
Install 8" Stub East

B."A" Sta. 34+39.58
0.00' Right

+61.7
Sta. 32+~~62.0~~ Line I
Manhole #I-7 (5' Dia.)
Const. Type "S" or "P" Manhole

B.M. #6

B."A" Sta. 37+77.90
0.00' Right

P.I. #6 B."A" Sta. 37+77.90

35+99.6
Sta. ~~36+00.3~~ Line I
Manhole #I-8 (5' Dia.)
Const. Type "S" or "P" Manhole
Install 8" Stub NE.

Sta. 36+50 to Sta. 37+90
Const. 140.0 L.F. Slough Crossing
& Conc. Encase. w/3' Cut-off Wall
(See Detail Sheet 2)

+89.1
Sta. 40+~~88.7~~ Line I
Manhole #I-9 (5' Dia.)
Const. Type "S" or "P" Manhole

B."A" Sta. 42+13.97
71.62' Left

P.I. #7 B."A" Sta. 41+91.06

SCALE: 1"= 40' Horiz.
1"= 5' Vert.

NOTE: STUBS ARE INCIDENTAL TO PROJECT.

NOTE:
1. Manhole #I-6 #I-7, #I-8
Install rubber gasket self-sealing lid.

B.M. #6 R.R. Spike in West Side P.P. 180.66' RT of Baseline "A" Sta. 33 + 05.65.
Elev. =

B.M. #7 R.R. Spike in West Side P.P. 203.15' RT of Baseline "A" Sta. 37 + 04.67.
Elev. = 130.495

B.M. #8 R.R. Spike in West Side of East Leg of 5th "H" Pole South of 21st. 342.35' South & 28.90 East of (P.I. #7) Baseline "A" Sta. 41+91.06
Elev. = 133.208

PLAN - LINE I

PROFILE - LINE I

M.H. #I-6 (5' Dia.) Top of M.H. = 131.82
IE Out = 120.32 ± 56
IE In = 120.17 ± 56
IE In = 121.72 (8" E ± I)

IE = 120.44 ± 64

IE = 120.59 ± 25

IE = 120.74 ± 86

M.H. #I-7 (5' Dia.) Top of M.H. = 133.24
IE Out = 120.28 ± 93
IE In = 120.33 ± 93
IE = 120.83 ± 97

IE = 120.95 ± 121.08

IE = 121.09 ± 119

M.H. #I-8 (5' Dia.) Top of M.H. = 132.80
IE Out = 121.80 ± 30
IE In = 121.90 ± 37
IE In = 122.53 (8" NE)

122.52

IE = 121.42 ± 50

IE = 121.54 ± 63

IE = 121.66 ± 76

IE = 121.78 ± 89

M.H. #I-9 (5' Dia.) Top of M.H. = 133.80
IE Out = 121.30 ± 01
IE In = 121.80 ± 22.11

Exist. Ground on ℄ of Pipe

100 Year Flood

330.0 L.F. 24" PVC or VCP @ 0.12%

338.3 L.F. 24" PVC or VCP @ 0.12%

Slough Crossing & Conc. Encase. w/ 3' cut off wall (See Detail Sheet 2.)

438.4 L.F. 24" PVC or VCP @ 0.12%

7/12

FILMED FROM THE BEST AVAILABLE COPY ····

CITY OF WICHITA
MAIN 15
SOUTHWEST INTERCEPTOR SEWER

N

SCALE : 1"= 40' Horiz.
1"= 5' Vert.

+89.1
Sta. 40+~~88.7~~ Line I
Manhole # I-9 (5' Dia.)
Const. Type "O" or "P" Manhole

CAUTION!
1-8", 2-12", & 1-16" High Pressure Pipelines
Notify both Phillips Pipeline Co., Bob Campbell, 838-6812 and Phoenix Transmission Co., Wade King, 262-1443, 48 hours prior to any work done within the easement.

40' Temporary Easement

30' Sanitary Sewer Easement

+31.2
Sta. 45+~~28.7~~ Line I
Manhole # I-10 (5' Dia.)
Const. Type "O" or "P" Manhole

180° 00' 00"

+68.9
Sta. 49+~~68.7~~ Line I
Manhole # I-11 (5' Dia.)
Const. Type "O" or "P" Manhole

30' San. Sewer Esmt.

MATCH LINE

West line of 150' KG & E Esmt.

℄ "A" Sta. 42+13.97
71.62' Left
107° 30' 21"

℄ "A" Sta. 46+53.96
69.85' Left

℄ "A" Sta. 50+93.96
68.08' Left
178° 30' 27"

Baseline "A"

42 43 44 45 46 47 48 49 50 51 52 53

TRASH PILE

PHOENIX 8" PIPELINE
PHILLIPS 12" PIPELINE

B.M. #9

B.M. #10

P.I. #7 ℄ "A" Sta. 41+91.06

B.M. #9 R.R. Spike in West Side of East Leg of 4th "H" Pole South of 21st 30.96' RT of Baseline "A" Sta. 45 + 17.38.
Elev. = 135.335

B.M. #10 R.R. Spike in West Side of East Leg of 3rd "H" Pole South of 21st 32.73' RT of Baseline "A" Sta. 51+ 73.80.
Elev. = 135.87

PLAN - LINE I

PROFILE - LINE I

135
130
125
120

12" Phillips
8" Phoenix
16" Phillips

Exist Ground on ℄ of Pipe

440.0 L.F. 24" PVC or VCP @ 0.12%
Alternate Pipe Material Class 63 HDPE (Spirolite)

440.0 L.F. 24" PVC or VCP @ 0.12%
Alternate Pipe Material Class 63 HDPE (Spirolite)

430.0 L.F. 24" PVC or VCP @ 0.12%
(Continued on next Sheet)
Alternate Pipe Material Class 63 HDPE (Spirolite)

40 41 42 43 44 45 46 47 48 49 50 51 52

8/12

FILMED FROM THE BEST AVAILABLE COPY....

CITY OF WICHITA
MAIN 15
SOUTHWEST INTERCEPTOR SEWER

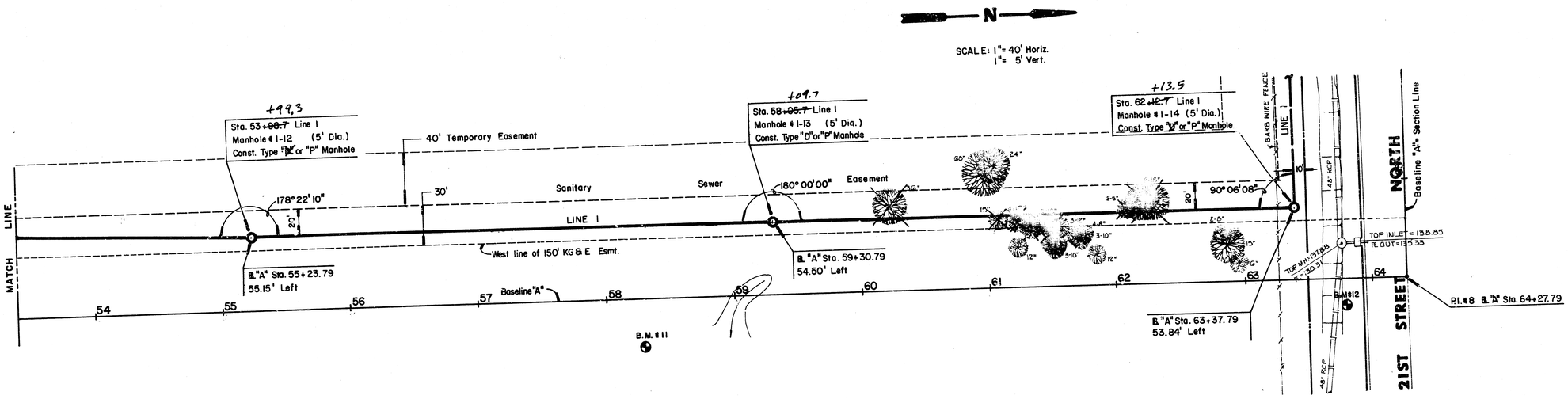

B.M. #11 R.R. Spike in West Side of East Leg of 2nd "H" Pole South of 21st 34.54' RT of Baseline "A" Sta. 58 + 28.39. Elev. = 134.36

B.M. #12 R.R. Spike in Northwest Side of West Leg of 1st "H" Pole South of 21st, 1243' ± East of Northwest Cor. Sec. 10-27S-1W, 19.30' RT of Baseline "A" Sta. 63+78.88 Elev. = 139.108

PLAN - LINE 1

PROFILE - LINE 1

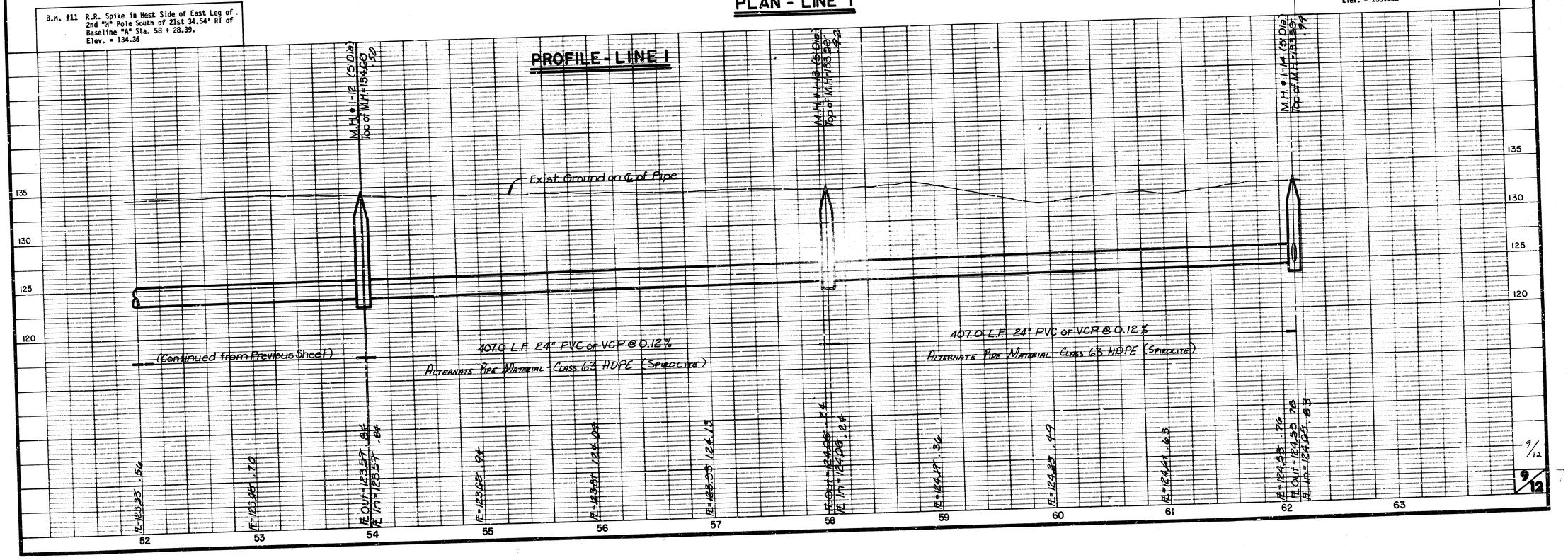

FILMED FROM THE BEST AVAILABLE COPY ....

CITY OF WICHITA
MAIN 15
SOUTHWEST INTERCEPTOR SEWER

SCALE: 1"= 40' Horiz.
1"= 5' Vert.

N

Sta. 62+~~12.7~~ +13.5 Line 1
Manhole #1-14 (5' Dia.)
Const. Type "S" or "P" Manhole

Sta. 67+~~62.7~~ +56.1 Line 1
Manhole #1-15 (5' Dia.)
Const. Type "S" or "P" Manhole

Sta. 72+~~92.7~~ +92.3 Line 1
Manhole #1-16 (5' Dia.)
Const. Type "S" or "P" Manhole
Install 24" Stub, W

40' Temporary Easement
20' Sanitary Easement
LINE 1
90° 06' 08"
180° 00' 00"
183° 26' 08"
GATE POST
BARB WIRE FENCE
48" RCP
18" RCP
15" RCP
60' R/W
10' R/W
B.M. #12
TOP IN = 140.51
RL OUT = 137.88
TOP IN = 140.82
RL OUT = 137.58
TOP IN = 140.26
RL OUT = 137.26
TOP IN = 143.62
RL OUT = 139.62
RL = 139.12
B.M. #13
21 ST STREET
NORTH
SECTION LINE
Baseline "A"= Section Line
B. A Sta. 63+37.79
53.84' Left
B. "A" Sta. 70+21.65
90.00' Left
B. "A" Sta. 75+61.65
90.00' Left
P.I. #8 B. "A" Sta. 64+27.79
P.I. #9 B. "A" Sta. 76+51.48=
B. "C" Sta. 0+00.00
ARKLA GAS
SIGNAL MH
TRAFFIC M.H.
SIGNAL LITE
RIDGE ROAD

NOTE:
1. Barb wire fence located along 21st Street R.O.W. removed for construction shall not be replaced. Stockpile fencing materials at the job site for county removal. Coordinate with Warren Duscher, 943-0192.

B.M. #12 R.R. Spike in Northwest Side of West Leg of 1st "H" Pole South of 21st, 1243' ± East of Northwest Cor. Sec. 10-27S-1W, 19.30' RT of Baseline "A" Sta. 63+78.88
Elev. = 139.108

B.M. #13 City of Wichita Bench Mark Disc 70' North and 5' East of North ¼ Cor. Sec. 10-27S-1W
Elev. = 132.416

PLAN-LINE 1

PROFILE-LINE 1

M.H. #1-14 (5' Dia.)
Top of M.H. = 133.80
IE Out = 124.40
IE In = 124.28

M.H. #1-15 (5' Dia.)
Top of M.H. = 138.23
IE = 124.95

M.H. #1-16 (5' Dia.)
Top of M.H. = 143.62
IE = 126.08

540.0 L.F. 24" PVC or VCP @ 0.12%
Alternate Pipe Material - Class 63 HDPE (Spirolite)

540.0 L.F. 24" PVC or VCP @ 0.12%
Alternate Pipe Material - Class 100 HDPE (Spirolite)

62 63 64 65 66 67 68 69 70 71 72 73
145 140 135 130 125

10/12

FILMED FROM THE BEST AVAILABLE COPY....

SEWER APPURTENANCES DETAILS
ADOPTED AS STANDARD DESIGN
BY
CITY OF WICHITA

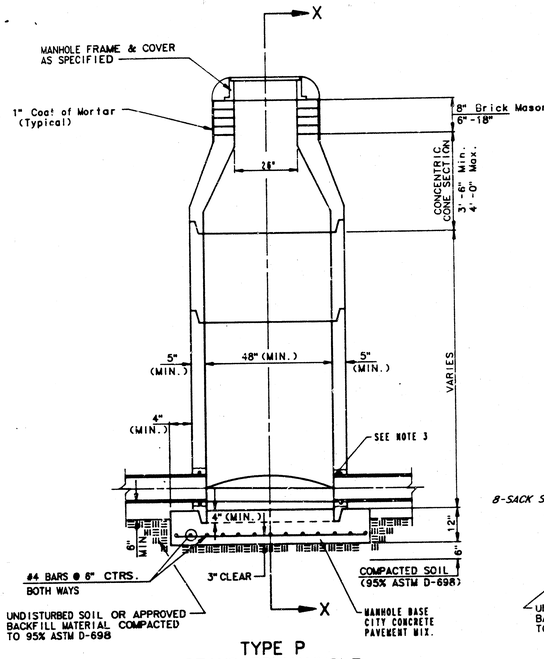

TYPE P
STANDARD MANHOLE

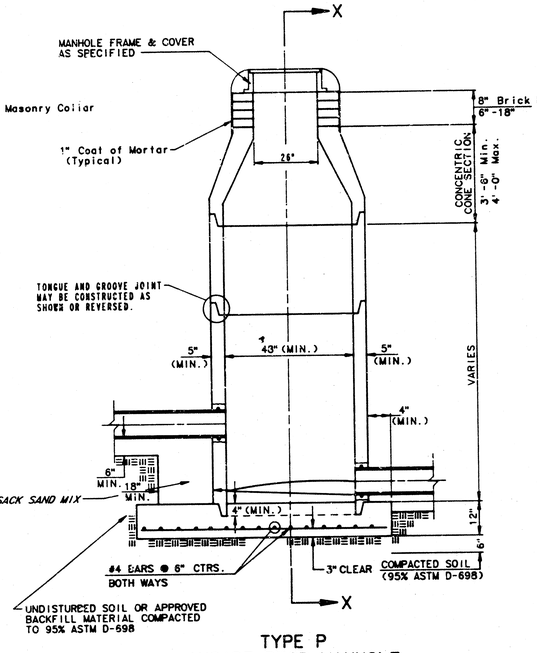

TYPE P
INSIDE DROP MANHOLE

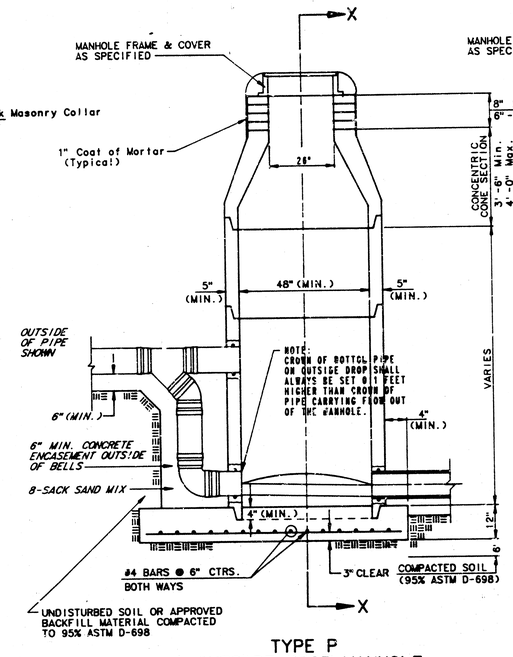

TYPE P
OUTSIDE DROP MANHOLE

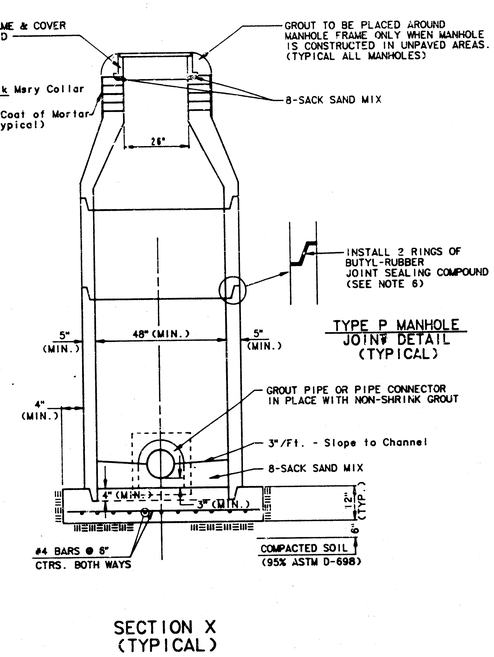

TYPE P MANHOLE JOINT DETAIL (TYPICAL)

SECTION X
(TYPICAL)

GENERAL NOTES

PRECAST MANHOLE NOTES

1. ALL PRECAST CONCRETE MANHOLE SECTIONS SHALL CONFORM TO THE LATEST REVISION OF A.S.T.M. C478 AS MODIFIED BY THE SPECIFICATIONS.
2. NON-SHRINK GROUT SHALL BE NON-METALLIC TYPE.
3. APPROVED FLEXIBLE WATERSTOP GASKETS SHALL BE INSTALLED TO JOIN THE SEWER TO THE MANHOLE WALL WHEN A.B.S. COMPOSITE PIPE OR P.V.C. PIPE IS USED. FOR OTHER TYPES OF PIPE THE SEWER SHALL BE GROUTED IN PLACE WITH NON-SHRINK GROUT. THE SEWER PIPE SHALL BE SUPPORTED WITH CONCRETE ENCASEMENT A MINIMUM OF 3 FEET FROM THE MANHOLE WALL AND TO THE FIRST JOINT FOR V.C.P. SUCH THAT THE JOINT REMAINS FLEXIBLE.
4. ALL INSIDE SURFACES OF THE CONCRETE MANHOLE WHICH WOULD BE EXPOSED TO SEWER GAS SHALL BE COATED WITH 2 COATS THEMEC SERIES 66 HI-BUILD EPOXOLINE, DRY THICKNESS OF 8 MILS (MIN.)
5. EXTERIOR MANHOLE WALLS SHALL BE COATED WITH 1 COAT MOBILARMA 633 BITUMINOUS COATING.
6. JOINT SEALING COMPOUND SHALL BE KENT SEAL NO. 2 OR APPROVED EQUAL.
7. PRECAST MANHOLES SHALL BE SET AT LEAST 4 INCHES INTO THE MANHOLE BASE.
8. TOP OF MANHOLE FLOOR SLAB SHALL BE AT LEAST 3 INCHES BELOW THE FLOW LINE OF THE OUTLET PIPE TO INSURE SUFFICIENT MINIMUM THICKNESS OF SHAPED INVERT.
9. LIFTING HOLES SHALL BE FILLED WITH NON-SHRINK GROUT AND THE INTERIOR SURFACE COATED AS SPECIFIED.
10. MORTAR USED IN MASONRY CONSTRUCTION SHALL CONTAIN 8 SACKS OF CEMENT PER CUBIC YARD. CONCRETE USED IN MANHOLE BASES SHALL CONFORM TO THE REQUIREMENTS OF CONCRETE FOR CONCRETE PAVEMENT CONSTRUCTION AS SPECIFIED IN THE CITY STANDARD PAVING SPECIFICATIONS USING CITY CONCRETE PAVEMENT MIX WITHOUT AIR ENTRAINING ADMIXTURE. MORTAR SHALL BE PLACED AROUND THE MANHOLE RING AS SHOWN ON THE DRAWINGS WHEN MANHOLES ARE CONSTRUCTED IN UNPAVED AREAS. MANHOLES CONSTRUCTED WHERE PIPE SIZES ARE SMALLER THAN 24" SHALL HAVE AN INSIDE DIAMETER OF 4'. MANHOLES CONSTRUCTED WHERE PIPE SIZES ARE 24" OR LARGER SHALL HAVE AN INSIDE DIAMETER OF 5'. COMPLETED MANHOLE SHALL BE WITHOUT LEAKS AND WATER TIGHT.
11. REINFORCING STEEL SHALL BE INSTALLED IN THE MANHOLE BASES AND SHALL CONSIST OF NO. 4 BARS PLACED ON 6" CENTERS IN BOTH DIRECTIONS. THE MANHOLE BASE REINFORCEMENT SHALL BE PLACED AT LEAST 3" ABOVE THE BOTTOM OF THE MANHOLE BASE. ALL COSTS FOR FURNISHING AND INSTALLING REINFORCING STEEL SHALL BE INCLUDED IN THE UNIT PRICE BID FOR THE MANHOLE.
12. OPENINGS SHALL BE CUT INTO THE MANHOLE WALL WHEN OUTSIDE DROPS ARE CONSTRUCTED ON EXISTING MANHOLES. SUCH OPENINGS CUT INTO EXISTING MANHOLES SHALL BE AS SMALL AS PRACTICAL TO FACILITATE INSTALLING AND GROUTING THE NEW PIPE IN PLACE. WATERSTOP GASKETS SHALL BE USED WITH P.V.C. AND A.B.S. COMPOSITE PIPE. THE NEW PIPE SHALL BE GROUTED INTO THE OPENING USING AN APPROVED NONSHRINK GROUT FOR THE FULL MANHOLE WALL THICKNESS. THE EXTERIOR OF THE COMPLETED CONNECTION SHALL BE SEALED WITH AN APPROVED BITUMINOUS COATING SUCH THAT THE CONNECTION WILL BE WATER TIGHT. FLOOR OF MANHOLE SHALL BE MODIFIED TO FORM NEW FLOW CHANNEL FOR THE NEW CONNECTION AS INDICATED BY THE DRAWING. THIS WORK, INCLUDING MODIFICATION OF MANHOLE FLOOR, SHALL BE PAID FOR AT THE UNIT PRICE BID FOR OUTSIDE DROP STACK CONSTRUCTED ON EXISTING MANHOLE.
13. THE FLOORS OF ALL MANHOLES SHALL BE SHAPED WITH FLOW CHANNELS SUCH THAT THE MANHOLES WILL BE SELF CLEANING AND FREE OF AREAS WHERE SOLIDS COULD BE DEPOSITED AS SEWAGE FLOWS THROUGH THE MANHOLE FROM ALL INLET PIPES TO THE OUTLET PIPE. FLOW CHANNELS SHALL BE FORMED TO MATCH THE BOTTOM HALVES OF THE INFLOWING PIPES AND THE OUTFLOWING PIPE AS SHOWN BY THE DRAWINGS EXCEPT FOR INSIDE DROP MANHOLES. FLOW CHANNELS FOR INSIDE DROP MANHOLES SHALL BE CONSTRUCTED AS INDICATED BY THE DRAWING. MANHOLE FLOORS SHALL HAVE SLOPES OF 3 INCHES PER FOOT IN THE AREAS OUTSIDE OF THE FLOW CHANNELS SLOPED TOWARD THE FLOW CHANNELS. PIPES LAID THROUGH MANHOLES SHALL HAVE THE TOP HALF REMOVED TO NEAT LINES FOR THE FULL INSIDE DIAMETER OF THE MANHOLE. MANHOLE FLOORS SHALL THEN BE SHAPED AROUND THE BOTTOM HALF OF THE PIPE WHICH FORMS THE FLOW CHANNEL.
14. PIPES INSTALLED WITHIN THE EXCAVATION MADE FOR THE MANHOLE SHALL BE CRADLED WITH CONCRETE TO THE LIMITS OF THE MANHOLE EXCAVATION. WHEN CLAY PIPE IS USED, THE CRADLE SHALL EXTEND TO THE FIRST JOINT OUTSIDE THE MANHOLE. THE CRADLE SHALL BE TERMINATED AT THE CLAY PIPE JOINT IN A MANNER WHICH WILL MAINTAIN THE FLEXIBILITY OF THE JOINT. COST OF CRADLE WITHIN MANHOLE EXCAVATION OR TO CLAY PIPE JOINTS ADJACENT TO MANHOLE SHALL BE INCLUDED IN THE UNIT PRICE BID FOR THE MANHOLE.
15. MANHOLE COVER CASTINGS AND MANHOLE FRAME CASTINGS SHALL CONFORM TO THE REQUIREMENTS AS INDICATED IN THE STANDARD SPECIFICATIONS AND AS SHOWN IN THE STANDARD DETAIL DRAWING.
16. THE VERTICAL DROP IN INSIDE DROP MANHOLES SHALL NOT EXCEED 4' FOR INFLOWING PIPES SIZED 12" OR SMALLER AND 2' FOR INFLOWING PIPES LARGER THAN 12". THE CROWNS OF INFLOWING PIPES SHALL NEVER BE SET LOWER THAN THE CROWN OF THE OUTFLOWING PIPE.
17. STANDARD MANHOLES AND STANDARD INSIDE DROP MANHOLES SHALL BE BID AS STANDARD MANHOLES FOR THE TYPE AND DIAMETER INDICATED. OUTSIDE DROP MANHOLES SHALL BE BID AS STANDARD OUTSIDE DROP MANHOLES FOR THE TYPE AND DIAMETER INDICATED. ALL MANHOLE DIAMETERS WILL BE 4' UNLESS INDICATED OTHERWISE.
18. A BRICK MASONRY COLLAR SHALL BE INSTALLED BETWEEN THE CAST IRON FRAME AND THE CONCENTRIC CONE. THE COLLAR WILL HAVE 8" WALLS AND A VERTICAL HEIGHT OF 6" MINIMUM AND 18" MAXIMUM. A 1" COAT OF MORTAR WILL BE PLASTERED ON THE OUTSIDE OF THE COLLAR.

11/12

11/12

Revised: June 12, 1986

FILMED FROM THE BEST AVAILABLE COPY....

SEWER APPURTENANCES DETAILS

ADOPTED AS STANDARD DESIGN
BY

CITY OF WICHITA, KANSAS

TYPE "D" MANHOLE

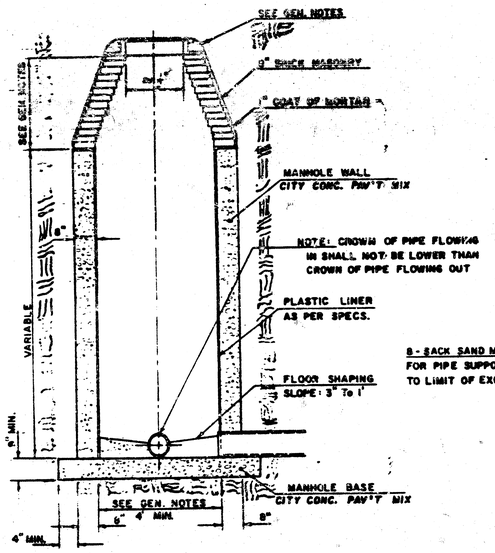

TYPE "D" INSIDE DROP MANHOLE

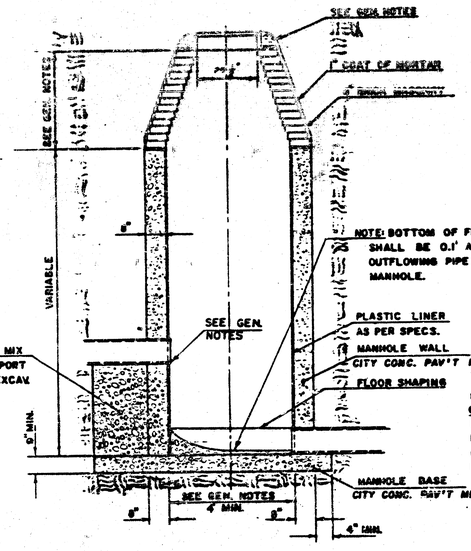

TYPE "D" OUTSIDE DROP MANHOLE

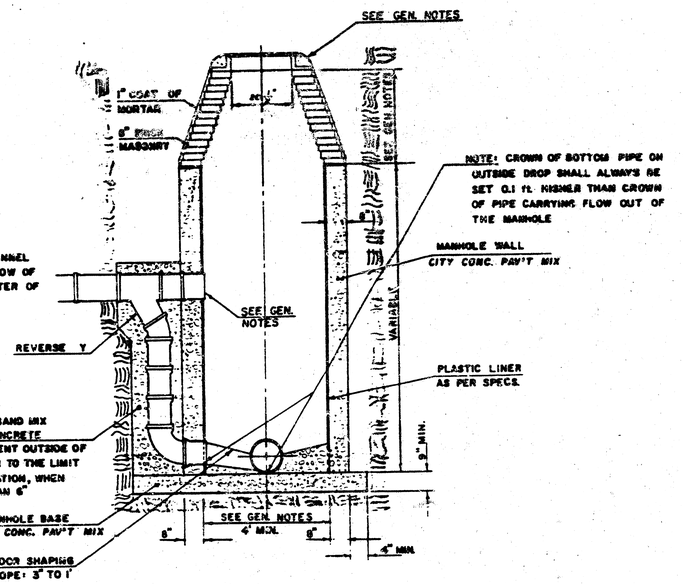

GENERAL NOTES

1. MORTAR USED IN MASONRY CONSTRUCTION SHALL CONTAIN 8 SACKS OF CEMENT PER CUBIC YARD. CONCRETE USED IN MANHOLE WALLS AND BASES SHALL CONFORM TO THE REQUIREMENTS OF CONCRETE FOR CONCRETE PAVEMENT CONSTRUCTION AS SPECIFIED IN THE CITY STANDARD PAVING SPECIFICATIONS USING CITY CONCRETE PAVEMENT MIX WITHOUT AIR ENTRAINING ADMIXTURE. MORTAR SHALL BE PLACED AROUND THE MANHOLE RING AS SHOWN ON THE DRAWINGS WHEN MANHOLES ARE CONSTRUCTED IN UNPAVED AREAS. PLASTIC LINING INSIDE THE MANHOLE SHALL CONFORM TO THE REQUIREMENTS SPECIFIED IN THE STANDARD SPECIFICATIONS FOR PLASTIC LINING FOR REINFORCED CONCRETE PIPE FOR SANITARY SEWER CONSTRUCTION. ALL INSIDE SURFACES OF THE MANHOLE WALL WHICH WOULD BE EXPOSED TO SEWER GAS SHALL BE PROTECTED BY THE PLASTIC LINING. TYPE "D" MANHOLES MAY BE USED ON PIPE SIZES 10" TO 36" WHEN THE MANHOLE DEPTH EXCEEDS THE REQUIRED CORBEL HEIGHT BY 1' PLUS THE OUTSIDE DIAMETER OF THE LARGEST PIPE IN THE MANHOLE. MANHOLES CONSTRUCTED WHERE PIPE SIZES ARE SMALLER THAN 24" SHALL HAVE A DIAMETER OF 4'. MANHOLES CONSTRUCTED WHERE THE PIPE SIZES ARE 24" OR LARGER SHALL HAVE A DIAMETER OF 5'. THE HEIGHT OF THE CORBELS ON 4' DIAMETER MANHOLES SHALL BE 4' MANHOLES HAVING A DIAMETER OF 5' SHALL HAVE CORBELS 6' IN HEIGHT. COMPLETED MANHOLE SHALL BE WITHOUT LEAKS AND WATER TIGHT.

2. REINFORCING STEEL SHALL BE INSTALLED IN THE MANHOLE BASE. REINFORCING STEEL SHALL CONSIST OF NO. 4 BARS PLACED ON 6" CENTERS IN BOTH DIRECTIONS. REINFORCING STEEL SHALL BE PLACED 6" ABOVE THE BOTTOM OF THE MANHOLE BASE. COST OF FURNISHING AND INSTALLING REINFORCING STEEL SHALL BE INCLUDED IN THE UNIT PRICE BID FOR THE MANHOLE.

3. AN OPENING SHALL BE CUT IN THE MANHOLE WALL FOR THE UPPER INLET PIPE FOR INSIDE AND OUTSIDE DROP MANHOLES. THE UPPER INLET PIPE SHALL BE GROUTED INTO THIS OPENING WITH NON-SHRINK GROUT. THE EXTERIOR OF THIS COMPLETED CONNECTION SHALL BE SEALED WITH AN APPROVED BITUMINOUS COATING SUCH THAT THE CONNECTION WILL BE WATER TIGHT. THE INTERIOR PLASTIC LINING SHALL BE SEALED AROUND THE INLET PIPE OPENING IN SUCH A MANNER THAT WILL EFFECTIVELY MAINTAIN THE INTEGRITY OF THE PROTECTIVE PLASTIC LINER.

4. THE FLOORS OF ALL MANHOLES SHALL BE SHAPED WITH FLOW CHANNELS SUCH THAT THE MANHOLES WILL BE SELF CLEANING AND FREE OF AREAS WHERE SOLIDS COULD BE DEPOSITED AS SEWAGE FLOWS THROUGH THE MANHOLE FROM ALL INLET PIPES TO THE OUTLET PIPE. FLOW CHANNELS SHALL BE FORMED TO MATCH THE BOTTOM HALVES OF THE INFLOWING PIPES AND THE OUTFLOWING PIPE AS SHOWN BY THE DRAWINGS EXCEPT FOR INSIDE DROP MANHOLES. FLOW CHANNELS FOR INSIDE DROP MANHOLES SHALL BE CONSTRUCTED AS INDICATED BY THE DRAWING. MANHOLE FLOORS SHALL HAVE SLOPES OF 3 INCHES PER FOOT IN THE AREAS OUTSIDE OF THE FLOW CHANNELS SLOPED TOWARD THE FLOW CHANNELS. PIPES LAID THROUGH MANHOLES SHALL HAVE THE TOP HALF REMOVED TO NEAT LINES FOR THE FULL INSIDE DIAMETER OF THE MANHOLE. MANHOLE FLOORS SHALL THEN BE SHAPED AROUND THE BOTTOM HALF OF THE PIPE WHICH FORMS THE FLOW CHANNEL.

5. PIPES INSTALLED WITHIN THE EXCAVATION MADE FOR THE MANHOLE SHALL BE CRADLED WITH CONCRETE TO THE LIMITS OF THE MANHOLE EXCAVATION. WHEN CLAY PIPE IS USED, THE CRADLE SHALL EXTEND TO THE FIRST JOINT OUTSIDE THE MANHOLE. THE CRADLE SHALL BE TERMINATED AT THE CLAY PIPE JOINT IN A MANNER WHICH WILL MAINTAIN THE FLEXIBILITY OF THE JOINT. COST OF CRADLE WITHIN MANHOLE EXCAVATION OR TO CLAY PIPE JOINTS ADJACENT TO MANHOLE SHALL BE INCLUDED IN THE UNIT PRICE BID FOR THE MANHOLE.

6. MANHOLE COVER CASTINGS AND MANHOLE FRAME CASTINGS SHALL CONFORM TO THE REQUIREMENTS AS INDICATED IN THE STANDARD SPECIFICATIONS AND AS SHOWN IN THE STANDARD DETAIL DRAWING.

7. THE VERTICAL DROP IN INSIDE DROP MANHOLES SHALL NOT EXCEED 4' FOR INFLOWING PIPES SIZED 12" OR SMALLER AND 2' FOR INFLOWING PIPES LARGER THAN 12". THE CROWNS OF INFLOWING PIPES SHALL NEVER BE SET LOWER THAN THE CROWN OF THE OUTFLOWING PIPE.

8. STANDARD MANHOLES TYPE "D" AND STANDARD INSIDE DROP MANHOLES TYPE "D" SHALL BE BID AS STANDARD MANHOLES FOR THE TYPE AND DIAMETER INDICATED. OUTSIDE DROP MANHOLES TYPE "D" SHALL BE BID AS STANDARD OUTSIDE DROP MANHOLES FOR THE TYPE AND DIAMETER INDICATED. ALL MANHOLE DIAMETERS WILL BE 4' UNLESS INDICATED OTHERWISE.

REVISED JAN. 1982 12/12

JUNE, 1980 12/12

FILMED FROM THE BEST AVAILABLE COPY