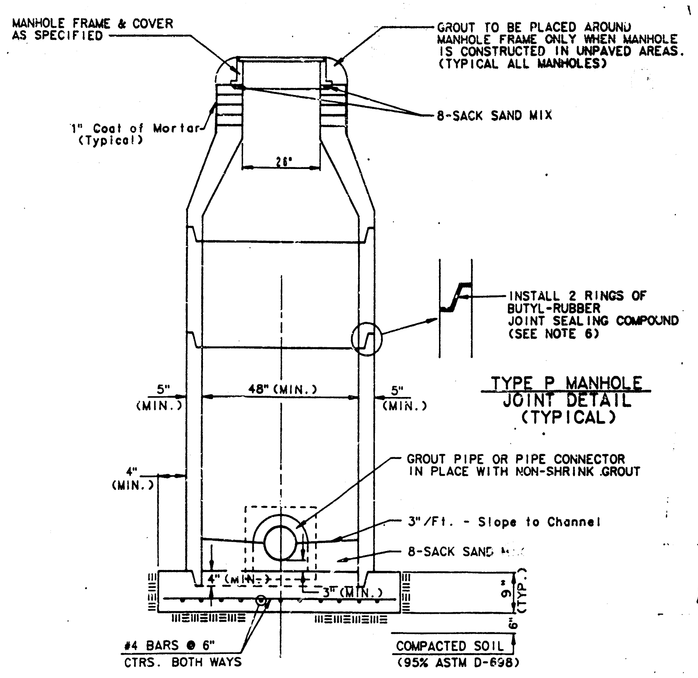

TYPE P MANHOLE JOINT DETAIL (TYPICAL)

SECTION "X"

NO SCALE

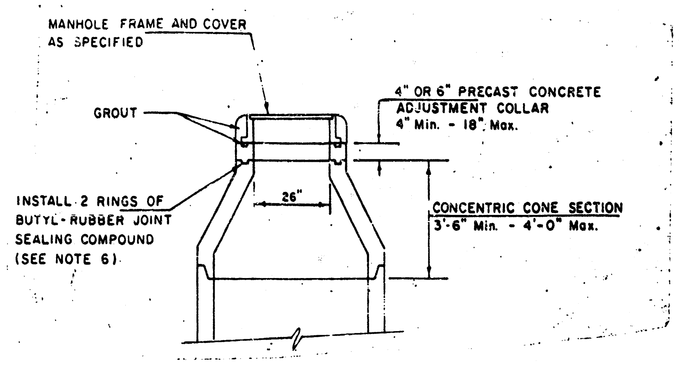

ALTERNATE CONSTRUCTION IN UNPAVED AREAS

NO SCALE

ADDRESS:
534 N. RIDGE ROAD
WICHITA, KS 67209

LEGAL DESCRIPTION:
LOT 1, NIEDENS 5TH ADDITION, WICHITA, SEDGWICK COUNTY, KANSAS

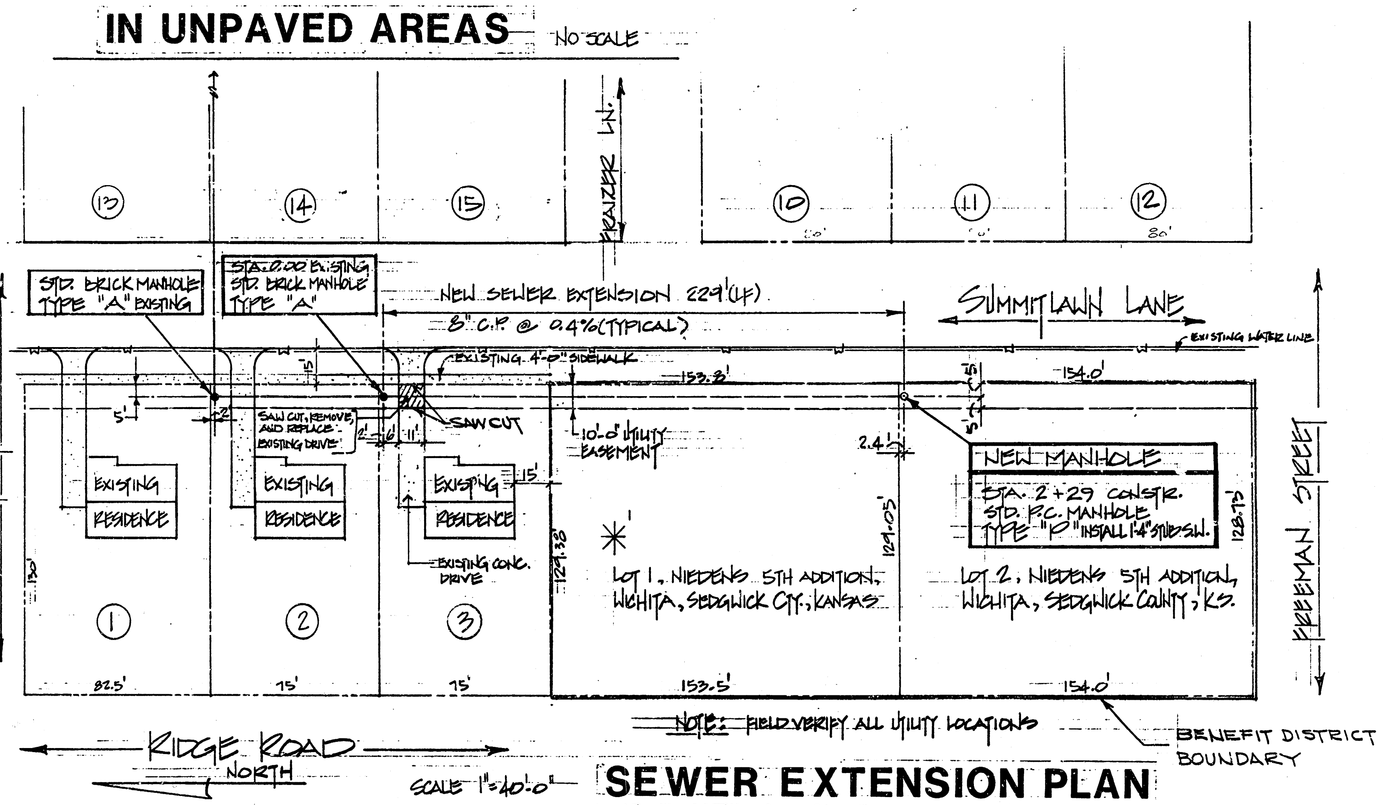

SCALE 1"=40'-0"

SEWER EXTENSION PLAN

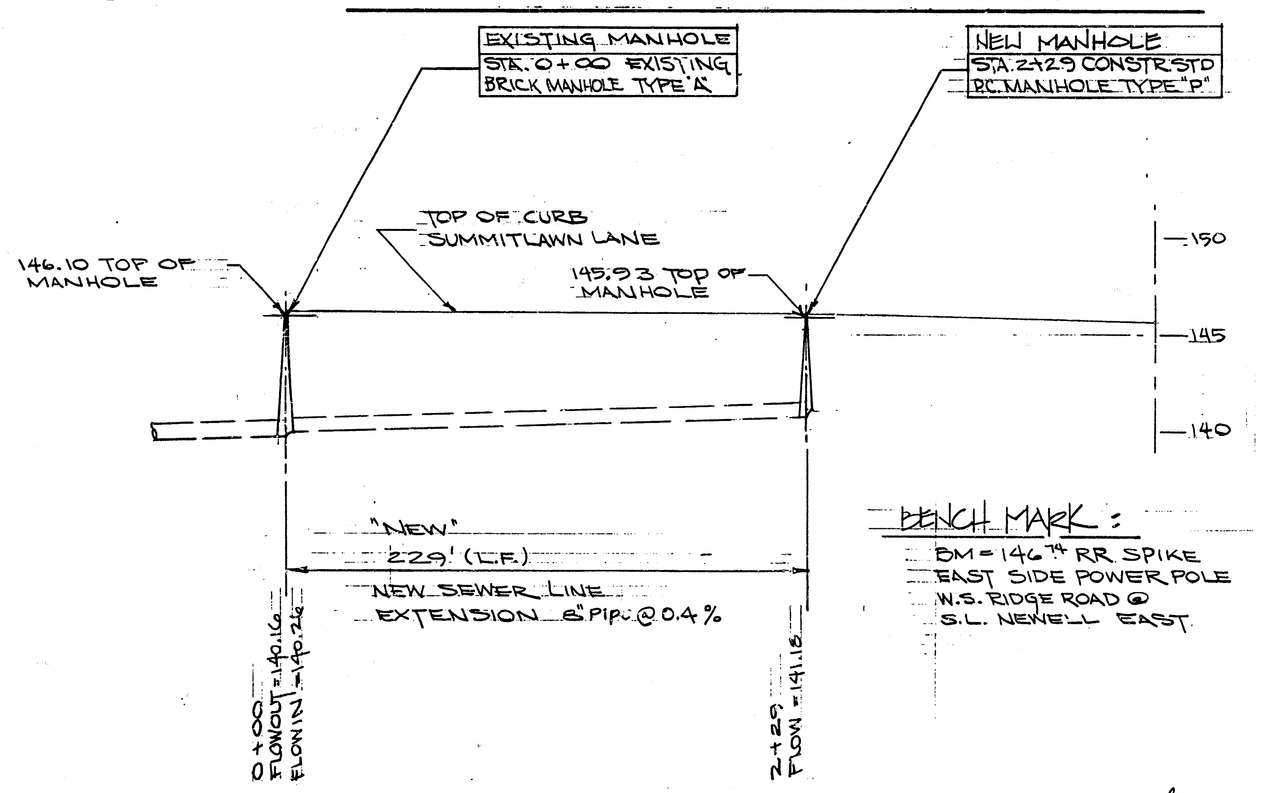

SEWER EXTENSION PROFILE

PER CITY DATA: 1AT 40, S.W. INT. SEWER
HORIZONTAL SCALE: 1" = 40'
VERTICAL SCALE: 1" = 5'

Booked RDL 9-18-89

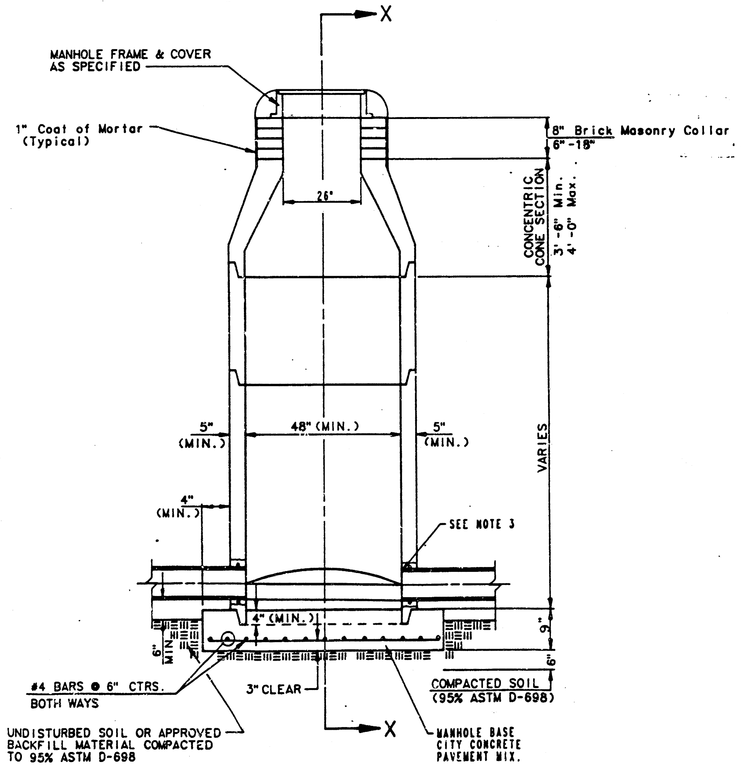

TYPE "P" STANDARD MANHOLE

NO SCALE

RIDGECREST BUILDING

SEWER/ MANHOLE GENERAL NOTES

1. All precast concrete manhole sections shall conform to the latest revision of A.S.T.M. C478 as modified by the specifications.
2. Non-Shrink grout shall be non-metallic type.
3. Approved flexible waterstop gaskets shall be installed to join the sewer to the manhole wall when A.B.S. composite pipe or P.V.C. pipe is used for other types of pipe the sewer shall be grouted in place with non-shrink grout. The sewer pipe shall be supported with concrete encasement a minimum of 3 feet from the manhole wall and to the first joint for V.C.P. such that the joint remains flexible.
4. All inside surfaces of the concrete manhole which would be exposed to sewer gas shall be coated with 2 coats TNEMEC series 66 Hi-Build Epoxoline, dry thickness of 8 Mils (min.).
5. Exterior manhole walls shall be coated with 1 coat Mobilarma 633 Bituminus coating.
6. Joint sealing compound shall be Kent Seal No.2 or approved equal.
7. Precast manholes shall be set at least 4 inches into the manhole base.
8. Top of manhole floor slab shall be at least 3 inches below the flow line of the outlet pipe to insure sufficient minimum thickness of shaped invert.
9. Lifting holes shall be filled with non-shrink grout and the interior surface coated as specified.
10. Mortar used in masonry construction shall contain 8 sacks of cement per cubic yard. Concrete used in manhole bases shall conform to the requirements of concrete for concrete pavement construction as specified in the city standard paving specifications using city concrete pavement mix without air entraining admixture. Mortar shall be placed around the manhole ring as shown on the drawings when manholes are constructed in unpaved areas. Manholes constructed where pipe sizes are smaller than 24" shall have an inside diameter of 4'. Manholes constructed where pipe sizes are 24" or larger shall have an inside diameter of 5'. Completed manhole shall be without leaks and water tight.
11. Reinforcing steel shall be installed in the manhole bases and shall consist of No. 4 bars placed on 6" centers in both directions. The manhole base reinforcement shall be placed at least 3" above the bottom of the manhole base. All costs for furnishing and installing reinforcing steel shall be included in the unit price bid for the manhole.
12. Openings shall be cut into the manhole wall when outside drops are constructed on existing manholes. Such openings cut into existing manholes shall be as small as practical to facilitate installing and grouting the new pipe in place. Waterstop gaskets shall be used with P.V.C. and A.B.S. composite pipe. The new pipe shall be grouted into the opening using an approved non-shrink grout for the full manhole wall thickness. The exterior of the completed connection shall be sealed with an approved bituminus coating such that the connection will be water tight. Floor of manhole shall be modified to form new flow channel for the new connection as indicated by the drawing. This work, including modification of manhole floor, shall be paid for at the unit price bid for outside drop stack constructed on existing manhole.
13. The floors of all manholes shall be shaped with flow channels such that the manholes will be self cleaning and free of areas where solids couid be deposited as sewage flows through the manhole from all inlet pipes to the outlet pipe. Flow channels shall be formed to match the bottom halves of the inflowing pipes and the outflowing pipe as shown by the drawings except for inside drop manholes. Flow channels for inside drop manholes shall be constructed as indicated by the drawing. Manhols floors shall have slopes of 3 inches per foot in the areas outside of the flow channels sloped toward the flow channels. Pipes laid through manholes shall have the top half removed to neat lines for the full inside diameter of the manhole. Manhole floors shall then be shaped around the bottom half of the pipe which forms the flow channel.
14. Pipes installed within the excavation made for the manhole shall be cradled with concrete to the limits of the manhole excavation. When clay pipe is used, the cradle shall extend to the first joint outside the manhole. The cradle shall be terminated at the clay pipe joint in a manner which will maintain the flexibility of the joint. Cost of cradle within manhole excavation or to clay pipe joints adjacent to manhole shall be included in the unit price bid for the manhole.
15. Manhole cover castings and manhole frame castings shall conform to the requirements as indicated in the standard specifications and as shown in the standard detail drawing.
16. The vertical drop in inside drop manholes shall not exceed 4' for inflowing pipes sized 12" or smaller and 2' for inflowing pipes larger than 12". The crowns of inflowing pipes shall never be set lower than the crown of the outflowing pipe.
17. Standard manholes and standard inside drop manholes shall be bid as standard manholes for the type and diameter indicated. Outside drop manholes shall be bid as standard outside drop manholes for the type and diameter indicated. All manhole diameters will be 4' unless indicated otherwise.
18. A brick masonry collar shall be installed between the cast iron frame and the concentric cone. The collar will have 8" walls and a vertical height of 6" minimum and 18" maximum. A 1" coat of mortar will be plastered on the outside of the collar.

REVISIONS	BY
4-10-89	CMT
5-10-89	JM

LATERAL 150, SOUTHWEST INTERCEPTOR
CITY OF WICHITA
MICHAEL E. LINDEBAK / P.E. CITY ENGINEER
PROJECT NO.: 48-7-24-150-000-001
INDEX NO.: 740019

CABER ASSOCIATES INC.
3817 WEST 13 TH WICHITA, KS. 67203
(316) 942-6740

Date 3-31-89
Scale NONE
Drawn
Job 1837125
Sheet SE-1 1/1
Of Sheets

FILMED FROM THE BEST AVAILABLE COPY

24 X 36 PRINTED ON NO. 1000H CLEARPRINT ●