SANITARY SEWER EXTENSIONS
LAT. 289, SOUTHWEST INTERCEPTOR

PROJECT NO. 468-76-245-82033-000-000-001
INDEX CODE 740381

CITY OF WICHITA, KANSAS
MICHAEL E. LINDEBAK, CITY ENGINEER
APRIL, 1990

GENERAL NOTES

1. CONTRACTOR WILL BE REQUIRED TO PROVIDE A MINIMUM ADVANCE NOTICE OF TWENTY-FOUR (24) HOURS TO UTILITY COMPANIES PRIOR TO STARTING ANY EXCAVATION AS FOLLOWS:

   KANSAS ONE-CALL 697-2470

   THE CONTRACTOR MUST NOTIFY THE FOLLOWING IN CASE OF AN EMERGENCY:

CABLEVISION	262-4270 OR 263-2961
KPL GAS SERVICE COMPANY	263-7511
KANSAS GAS & ELECTRIC	264-1141
ARKLA GAS COMPANY	942-8350 OR 263-8161
SOUTHWESTERN BELL TELEPHONE CO.	1-571-2611
CITY OF WICHITA WATER DEPARTMENT	268-4568
CITY OF WICHITA SEWER MAINTENANCE	268-4071

2. THE CONTRACTOR SHALL BE RESPONSIBLE FOR PRESERVING PROPERTY IRONS. THE CONTRACTOR SHALL BE REQUIRED TO RE-ESTABLISH PROPERTY IRONS WHICH ARE DAMAGED OR DESTROYED BY HIS CONSTRUCTION OPERATIONS SUCH IRONS SHALL BE RE-ESTABLISHED BY A LICENSED LAND SURVEYOR OR A LICENSED PROFESSIONAL ENGINEER IN ACCORDANCE WITH STATE LAWS.

3. ~~A PORTION OF EXCESS EXCAVATED MATERIAL SHALL BE MOUNDED AROUND MANHOLES WHICH EXTEND MORE THAN ONE (1) FOOT ABOVE THE EXISTING GROUND. SUCH MOUNDS SHALL BE CONSTRUCTED WITH A SIX (6) FOOT DIAMETER FLAT TOP WITH 4 TO 1 SIDE SLOPES DOWN TO THE ORIGINAL GROUND. THE ELEVATION OF THE FLAT TOP OF THE MOUND SHALL BE 0.4 FOOT ABOVE THE TOP OF THE MANHOLE.~~

4. EXISTING UTILITIES AND THEIR LOCATIONS, AS SHOWN ON THE PLANS, REPRESENT THE BEST INFORMATION OBTAINABLE FOR DESIGN. LOCATION INFORMATION HAS BEEN OBTAINED FROM THE VARIOUS UTILITY COMPANIES AND IS EITHER FROM COMPANY RECORD DRAWINGS OR COMPANY PROVIDED FIELD LOCATIONS. THE PLAN LOCATIONS SHOWN ARE NOT GUARANTEED. ADDITIONAL EXISTING UTILITIES MAY ALSO BE ENCOUNTERED. UNDERGROUND UTILITY SERVICE LINES AND OVERHEAD UTILITY POLE LINES ARE TO BE ADJUSTED AS NECESSARY BY OTHERS PRIOR TO CONSTRUCTION UNLESS THE PLANS SPECIFICALLY CALL FOR THEIR ADJUSTMENT BY THE CONTRACTOR OR UNLESS THE PLANS SPECIFICALLY IDENTIFY A UTILITY TO BE ADJUSTED BY ITS OWNER DURING CONSTRUCTION. THE CONTRACTOR WILL BE REQUIRED TO WORK AROUND EXISTING UTILITIES WITHIN THE RIGHT-OF-WAY WHICH DO NOT CONFLICT WITH PROPOSED CONSTRUCTION.

5. ALL STUBS AND PLUGGED PIPES SHALL BE LOCATED WITH GREEN PLASTIC TAPE IN THE SAME MANHOLE AS RISERS. LOCATIONS OF THE ENDS OF THE PIPE STUBS SHALL BE MARKED BY FASTENING GREEN COLORED PLASTIC TAPE TO THE END OF THE PIPE STUB WHICH SHALL BE EXTENDED TO THE GROUND SURFACE AS THE EXCAVATION IS BACKFILLED SUCH THAT THE COLORED TAPE WILL BE VISIBLE WHEN THE PROJECT IS COMPLETED. SUCH GREEN PLASTIC TAPE SHALL BE 4 MIL POLYETHYLENE FILM WITH A MINIMUM WIDTH OF 3" SPECIALLY MANUFACTURED FOR THE PURPOSE OF IDENTIFICATION OF UNDERGROUND SEWERS. THE ENDS OF MANHOLE STUBS SHALL BE CAPPED OR PLUGGED USING FITTINGS FURNISHED BY THE MANUFACTURER OF THE PIPE.

6. COST OF EXCAVATION, HAULING, AND DUMPING OF EXCESS EXCAVATION SHALL BE SUBSIDIARY TO THE PROJECT.

7. RUBBLE FROM THE REMOVAL OF MISCELLANEOUS STRUCTURES AND EXCESS EXCAVATION WHICH IS TO BE WASTED SHALL BE DISPOSED OF ON SITES TO BE PROVIDED BY THE CONTRACTOR. THESE SITES SHALL BE APPROVED BY THE ENGINEER AS TO SUITABILITY, APPEARANCE AND SITE LOCATION. LOCATIONS THAT, IN THE OPINION OF THE ENGINEER, WILL LEAVE AN UNSIGHTLY APPEARANCE WILL NOT BE APPROVED.

8. ~~UNLESS OTHERWISE NOTED ON THE PLANS MANHOLES MAY BE TYPE "B", "C", OR "D". MANHOLES SHALL BE CONSTRUCTED IN ACCORDANCE WITH THE STANDARD SPECIFICATIONS AND THE STANDARD DETAIL DRAWINGS.~~

9. MAILBOXES WITHIN THE LIMITS OF THE PROJECT SHALL BE REMOVED AND REPLACED BY THE CONTRACTOR AS APPROVED BY THE ENGINEER. CONTRACTOR WILL BE REQUIRED TO MAKE SATISFACTORY PROVISIONS FOR MAIL DELIVERY TO PROPERTIES AFFECTED BY THIS PROJECT DURING ITS CONSTRUCTION.

10. THE SANITARY SEWER LINES SHALL BE CONSTRUCTED ON THE ALIGNMENT AND GRADE SHOWN BY THE PLANS. THE COST FOR ANY NECESSARY TREE TRIMMING, CLEARING AND/OR GRUBBING SHALL BE INCLUDED IN THE PRICE BID FOR THE INSTALLED SANITARY SEWER PIPE. TREES AND SHRUBS IN PUBLIC RIGHT-OF-WAY WHICH ARE IN DIRECT CONFLICT WITH PROPOSED NEW CONSTRUCTION SHALL BE REMOVED BY THE CONTRACTOR WITH THE ENGINEER'S APPROVAL. TREES AND SHRUBS WHICH ARE NOT IN DIRECT CONFLICT WITH PROPOSED NEW CONSTRUCTION SHALL BE SAVED AND PROTECTED FROM DAMAGE.

11. THE CONTRACTOR SHALL GIVE ALL PROPERTY OWNERS AND/OR TENANTS OF DEVELOPED PROPERTY ABUTTING THE CONSTRUCTION OF THIS PROJECT A MINIMUM OF TEN (10) DAYS ADVANCE NOTICE PRIOR TO START OF CONSTRUCTION.

12. A SAW CUT OF AT LEAST ONE-HALF THE DEPTH OF EXISTING SURFACE COURSES OR ONE-FOURTH THE DEPTH OF THE EXISTING TOTAL PAVEMENT THICKNESS, SHALL BE PROVIDED AT LOCATIONS WHERE PROPOSED CONSTRUCTION WILL JOIN AN EXISTING SURFACE COURSE OR PAVEMENT FOR WHICH PARTIAL REMOVAL OF THAT SURFACE OR PAVEMENT IS REQUIRED. SAWED JOINT TO FACILITATE REMOVAL WITHIN 3 FEET (3') OF EXISTING JOINTS WILL NOT BE PERMITTED AND FOR SUCH INSTANCES THE LIMITS OF REMOVAL SHALL EXTEND TO THE EXISTING JOINT. SUCH SAW CUTS WILL NOT BE PAID FOR DIRECTLY AND THIS COST SHALL BE CONSIDERED AS SUBSIDIARY TO THE REMOVAL OF THE SURFACE OR PAVEMENT.

13. PAVEMENT REMOVAL AND/OR REPLACEMENT WILL BE MEASURED AND PAID FOR ON THE LINEAL FOOT BASIS AS MEASURED ALONG THE CENTERLINE OF THE SEWER REGARDLESS OF WIDTH OR THICKNESS. MINIMUM LIMITS OF SUCH PAVEMENT REMOVAL AND REPLACEMENT SHALL BE ONE FOOT BEYOND THE LIMITS OF THE EXCAVATION MADE FOR THE SEWER OR THE STRUCTURE, EXCEPT WHEN THE LINES OF REMOVAL ARE WITHIN THREE (3) FEET OF AN EXISTING JOINT THE LIMITS OF REMOVAL SHALL BE EXTENDED TO THE EXISTING JOINT. REMOVAL AND REPLACEMENT OF EXISTING PAVEMENT SHALL CONFORM TO THE APPLICABLE SECTIONS OF THE CITY OF WICHITA STANDARD SPECIFICATIONS.

14. THE CONTRACTOR SHALL MAINTAIN ~~ONE LANE IN EACH DIRECTION~~ THROUGH 55TH STREET SOUTH AND ~~ONE LANE IN EACH DIRECTION~~ ON SENECA STREET. THE CONTRACTOR SHALL CONFORM TO ALL TRAFFIC CONTROL REQUIREMENTS AS STATED IN THE CITY OF WICHITA SANITARY SEWER SPECIFICATIONS. THE CONTRACTOR SHALL BE AS EXPEDIENT AS POSSIBLE IN CONSTRUCTING THE PORTION OF THE SEWER THAT CROSSES 55TH STREET SOUTH TO ALLOW FOR THE REOPENING OF BOTH LANES TO TRAFFIC AS QUICKLY AS POSSIBLE.

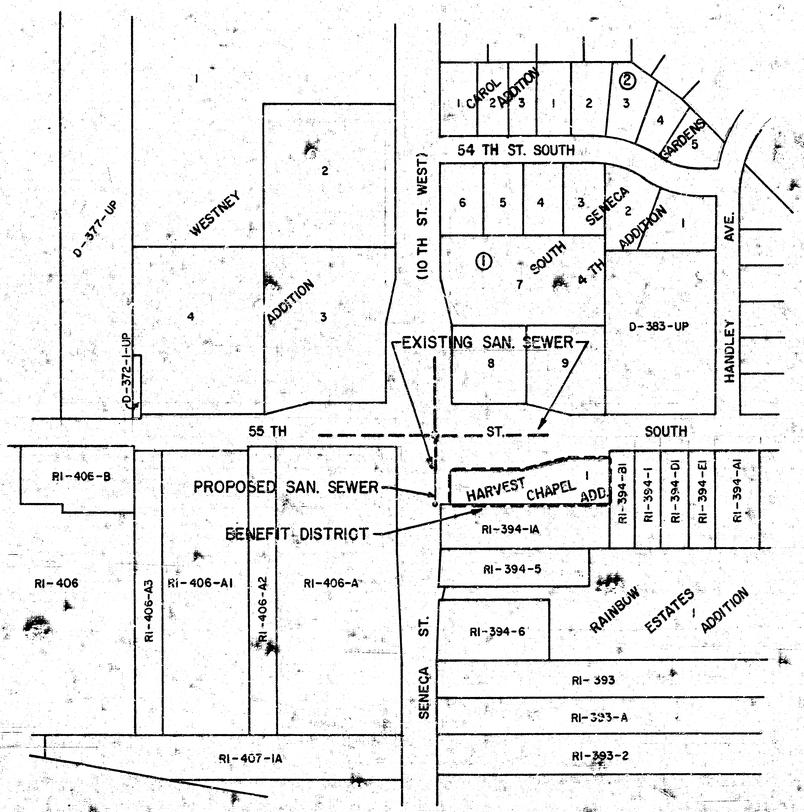

DRAWING INDEX

SHEET	TITLE
1	MAP AND BENEFIT DISTRICT
2	PLAN AND PROFILE

RUSSELL L. DARLING — LICENSED — 4123 — KANSAS — PROFESSIONAL ENGINEER

WICHITA, KANSAS
SANITARY SEWER EXTENSIONS

MAP AND BENEFIT DISTRICT
LAT. 289, SOUTHWEST INTERCEPTOR
PROJECT NO. 468-76-245-82033-000-000-001

CASTLE & ASSOCIATES
ENGINEERS
WICHITA, KANSAS

DSG
DR
CH
APP

DWG FILE NO
8932 - D - 60,059

DATE APRIL 1990

SHEET NO 1 OF 2

REV.

R.R. SPIKE, EAST FACE OF POWER POLE, WEST OF SENECA
2ND POLE NORTH OF 55TH STREET SOUTH
ELEV. = 82.48

BOX CHISEL, N.E. CORNER OF HUBGUARD ON 55TH STREET SOUTH
ON RCBC, WEST OF PARK BOARD LAKE
ELEV. = 85.02

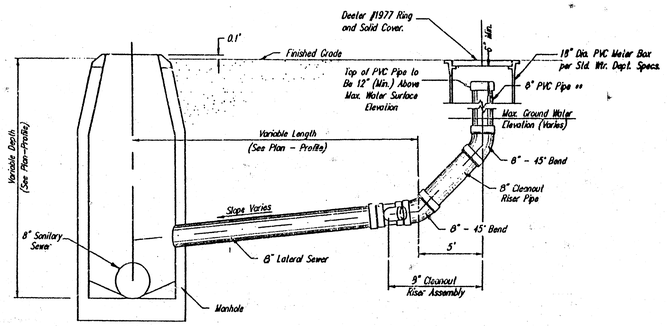

CLEANOUT RISER DETAIL

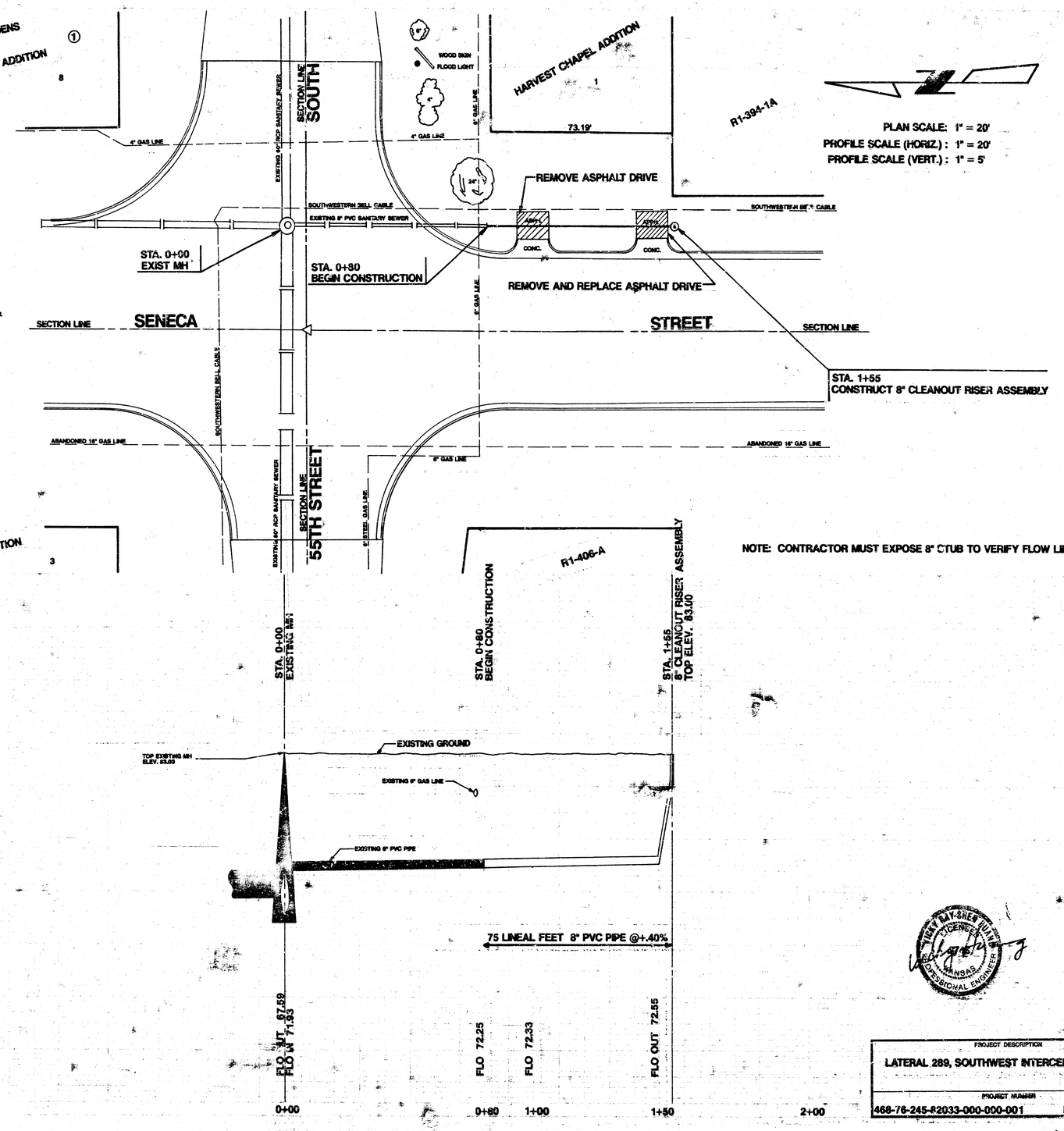

PLAN SCALE: 1" = 20'
PROFILE SCALE (HORIZ.): 1" = 20'
PROFILE SCALE (VERT.): 1" = 5'

NOTE: CONTRACTOR MUST EXPOSE 8" STUB TO VERIFY FLOW LINE ELEVATION.

TIMOTHY RAY SHEAR
LICENSED
KANSAS
PROFESSIONAL ENGINEER

PROJECT DESCRIPTION
LATERAL 289, SOUTHWEST INTERCEPTOR SEWER

PROJECT NUMBER
468-76-245-R2033-000-000-001 INDEX # 740391