SANITARY SEWER IMPROVEMENTS
STONEBOROUGH ADDITION

LATERAL 325, S.W.I.
PROJECT NUMBER 468-76-245-82327-000-000-001
INDEX CODE: 741587

GENERAL NOTES

1. Traffic generated outside the project area and local business or residential traffic generated within the project area are to be carried through construction.

2. Underground utility service lines and overhead utility pole lines are to be adjusted by others if necessary prior to construction unless the plans specifically call for their adjustment by the Contractor or by thier owner. Existing utilities and their location, as shown on the plans, represent the best information obtainable for design. The Contractor will be required to work around existing utilities within the right-of-way which do not conflict with proposed construction.

3. Rubble from the removal of miscellaneous structures and excess excavation which is to be wasted shall be disposed of on sites to be provided by the Contractor. These sites shall be approved by the Engineer as to suitability, appearance and site location. Locations that, in the opinion of the Engineer, will leave an unsightly appearance will not be approved. All disposal sites must be approved by the Kansas Department of Health and Environment. Material either stockpiled or disposed of in a flood plain would require a Kansas State Board of Agricultural permit. Any material dumped in waters of the United States or wetlands is subject to U.S. Corps of Engineers permitting regulations. Any material buried or stockpiled beyond approved construction limits would require additional archaeological investigations unless buried in a previously approved borrow location.

4. Trees and shrubs in public right-of-way which are in direct conflict with proposed construction shall be removed by the Contractor with the Engineers approval. Trees and shrubs which are not in direct conflict with proposed construction shall be saved and protected from damage.

5. The Contractor shall give all property owners and/or tenants of developed property abutting the construction of this project a minimum of ten (10) days notice prior to start of construction.

6. The Contractor shall be responsible for preserving property irons. The Contractor will be required to re-establish any property irons which are disturbed by his construction operations. Such irons shall be re-established by a licensed Land Surveyor in accordance with state laws.

7. The Contractor shall contact all affected utility companies concerning the relocation of utility lines as per the plans.

8. Contractor will be required to provide a minimum notice of twenty-four (24) hours to utility companies prior to starting any excavation as follows:

   Kansas One-Call 687-2470

   The Contractor must notify the following before construction and in case of an emergency.

K.P.& L. Gas Service Company	263-7511
Kansas Gas & Electric	264-1141
Arkla Gas Company	942-5350 or 263-8161
Southwestern Bell Telephone Company	1-571-2611
Cablevision	262-4270 or 263-2061
City of Wichita Water Department	268-4908
City of Wichita Sewer Maintenance	268-4071

9. Utility easements along the route of this sewer shall be graded to the elevation shown on the plan/profile sheets, per City Specifications.

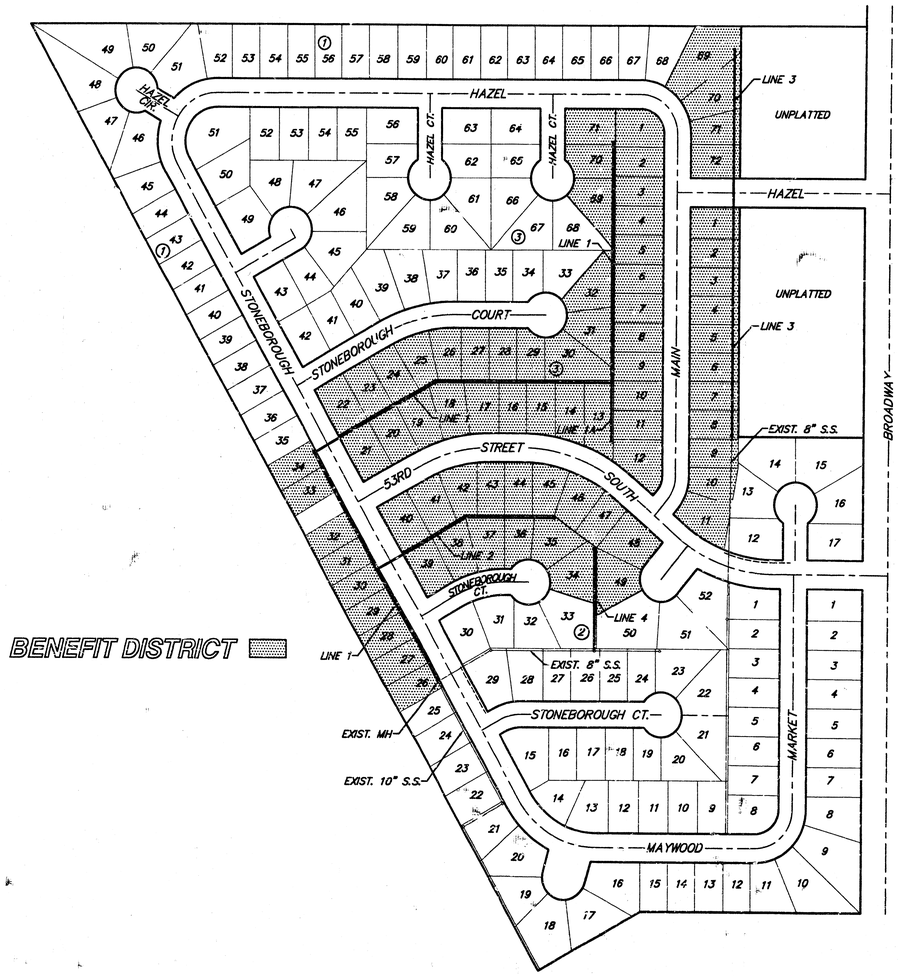

BENEFIT DISTRICT

CITY OF WICHITA, KANSAS
MICHAEL E. LINDEBAK - CITY ENGINEER

INDEX OF SHEETS

1. TITLE SHEET
2. LINE 1
3. LINE 1
4. LINE 1
5. LINE 3
6. LINE 2 AND LINE 4
7. STANDARD MANHOLE DETAIL
8. PLAT OF STONEBOROUGH ADDITION

Booked 12-21-93
JKB
As Per Plan

CHRISTOPHER MICHAEL KOHN
LICENSED
11631
KANSAS
PROFESSIONAL ENGINEER

SRB 841 SOUTH HILLSIDE WICHITA, KANSAS 67211 316-652-7754 FAX 652-7932
SAVOY, RUGGLES & BOHM, P.A.
ENGINEERING & SURVEYING

BENCH MARK: Top of "T" Post located near the N.W. Corner of Lot 33, Block 2, Stoneborough Addition
Elevation = 81.49 City Datum

BENCH MARK: Square cut in top of curb, located 10' south and 14.5' east of the S.E. Corner of Lot 26, Block 1, Stoneborough Addition
Elevation = 83.16 City Datum

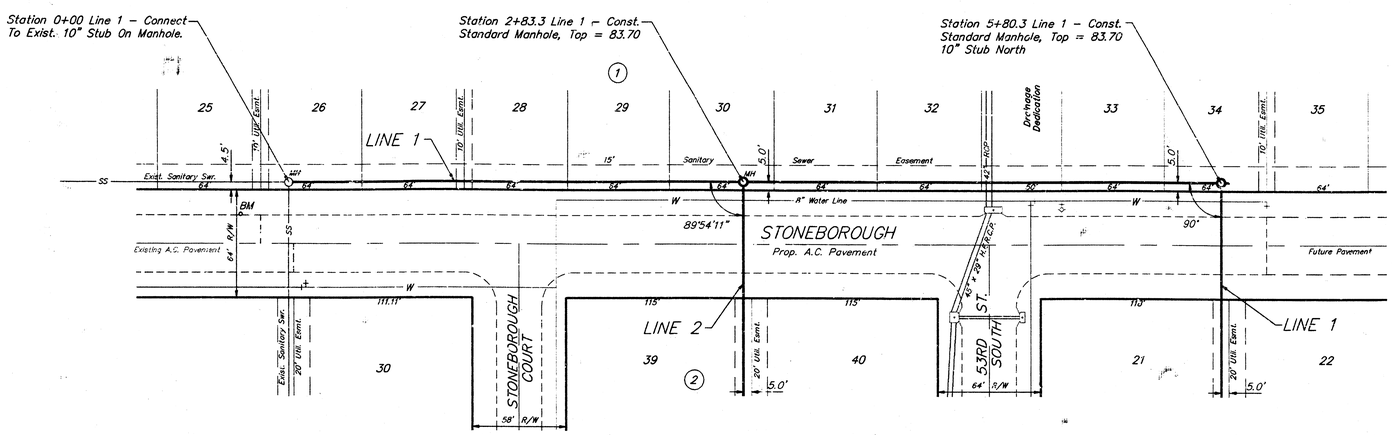

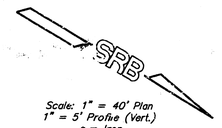

Scale: 1" = 40' Plan
1" = 5' Profile (Vert.)
o = Iron

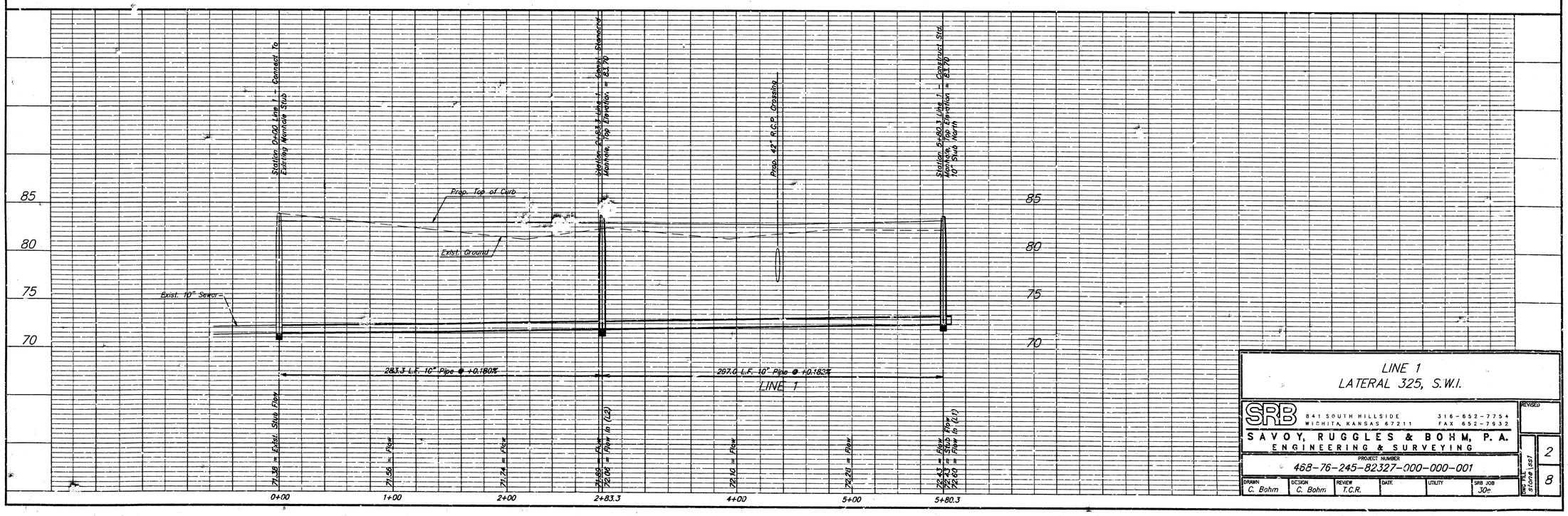

LINE 1
LATERAL 325, S.W.I.

SRB 841 SOUTH HILLSIDE WICHITA, KANSAS 67211 316-652-7754 FAX 652-7932
SAVOY, RUGGLES & BOHM, P. A.
ENGINEERING & SURVEYING

PROJECT NUMBER
468-76-245-82327-000-000-001

DRAWN	DESIGN	REVIEW	DATE	UTILITY	SRB JOB
C. Bohm	C. Bohm	T.C.R.			30e

DWG FILE: stone1.ss1

REVISED

2
8

BENCH MARK: R.R. Spike in H.L.P. located at the N.E. Corner of Lot 15, Block 4, Stoneborough Addition
Elevation = 86.20 City Datum

BENCH MARK: Square Cut in top of curb, located on the south side of 53rd Street South, 135' west of the intersection Main and 53rd Street South
Elevation = 84.13 City Datum

BENCH MARK: Top of "T" Post located near the N.W. Corner of Lot 33, Block 2, Stoneborough Addition
Elevation = 81.49 City Datum

BENCH MARK: Square cut in top of curb, located 10' south and 14.5' east of the S.E. Corner of Lot 26, Block 1, Stoneborough Addition
Elevation = 83.16 City Datum

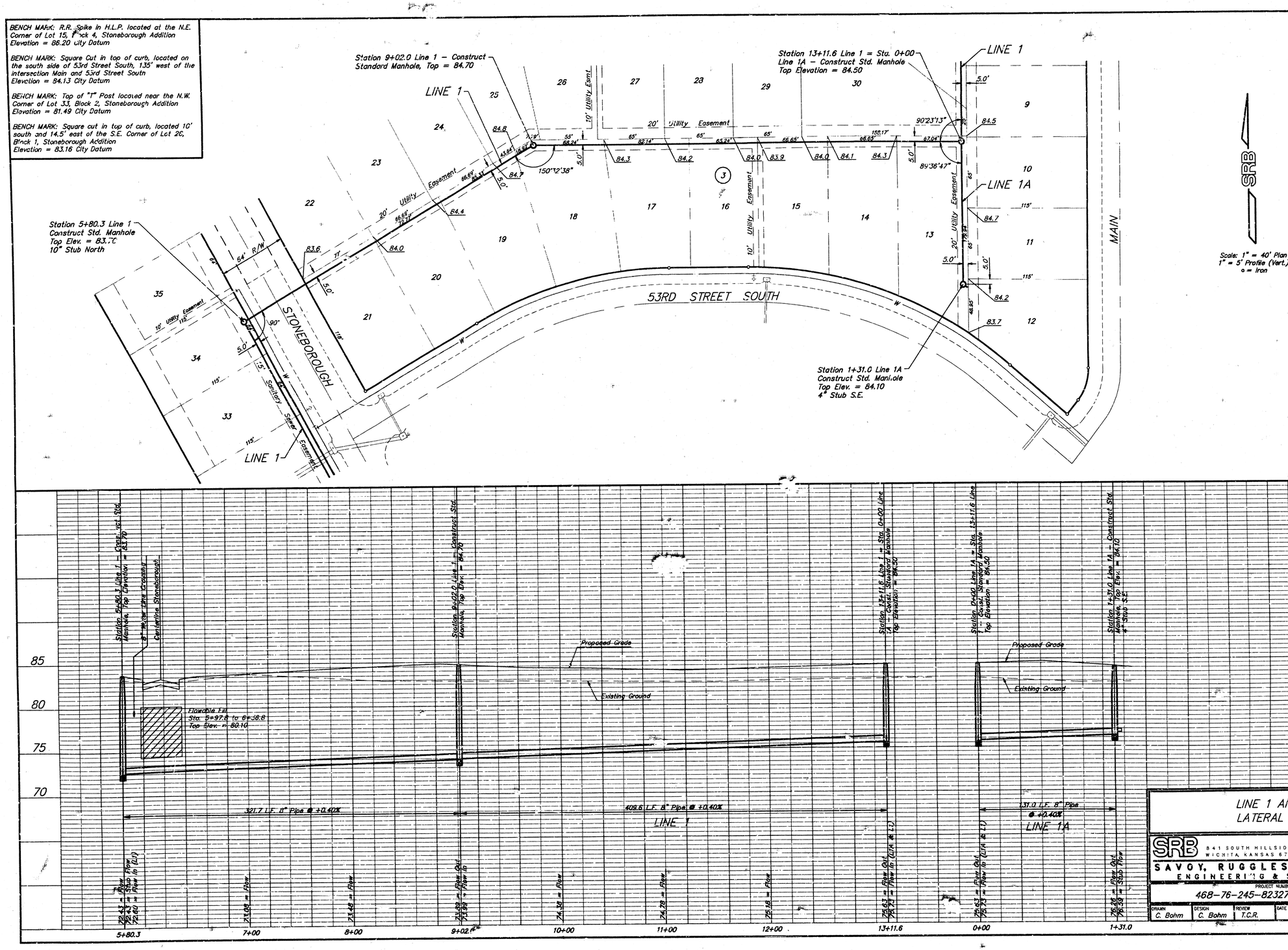

LINE 1 AND LINE 1A
LATERAL 325, S.W.I.

SRB 841 SOUTH HILLSIDE WICHITA, KANSAS 67211 316-652-7754 FAX 652-7932
SAVOY, RUGGLES & BOHM, P.A.
ENGINEERING & SURVEYING

PROJECT NUMBER
468-76-245-82327-000-000-001

DRAWN	DESIGN	REVIEW	DATE	UTILITY	SRB JOB
C. Bohm	C. Bohm	T.C.R.			30a

REVISED

3
8

SRB

Scale: 1" = 40' Plan
1" = 5' Profile (Vert.)
o = Iron

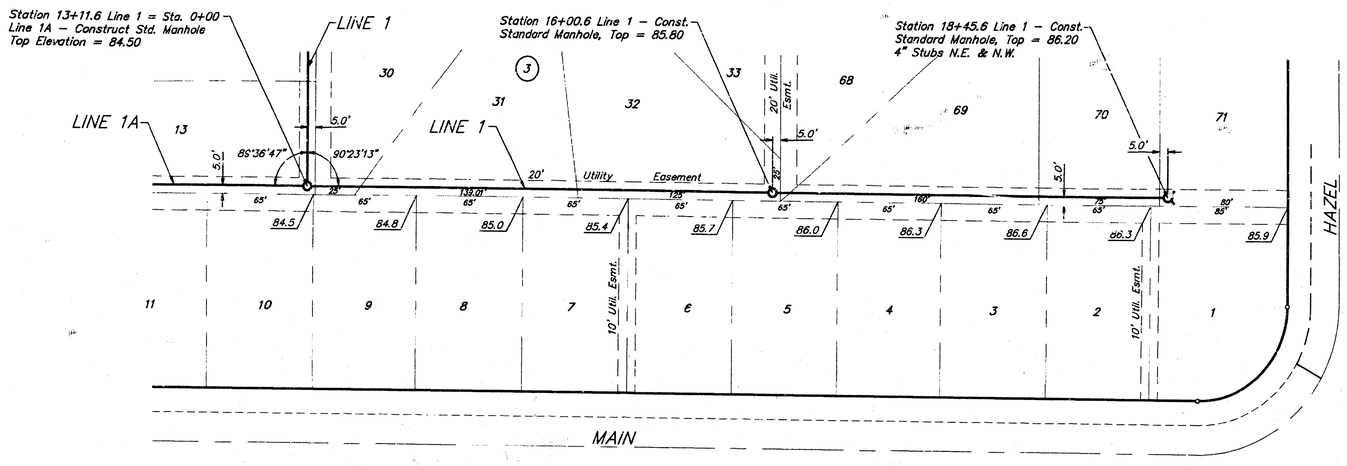

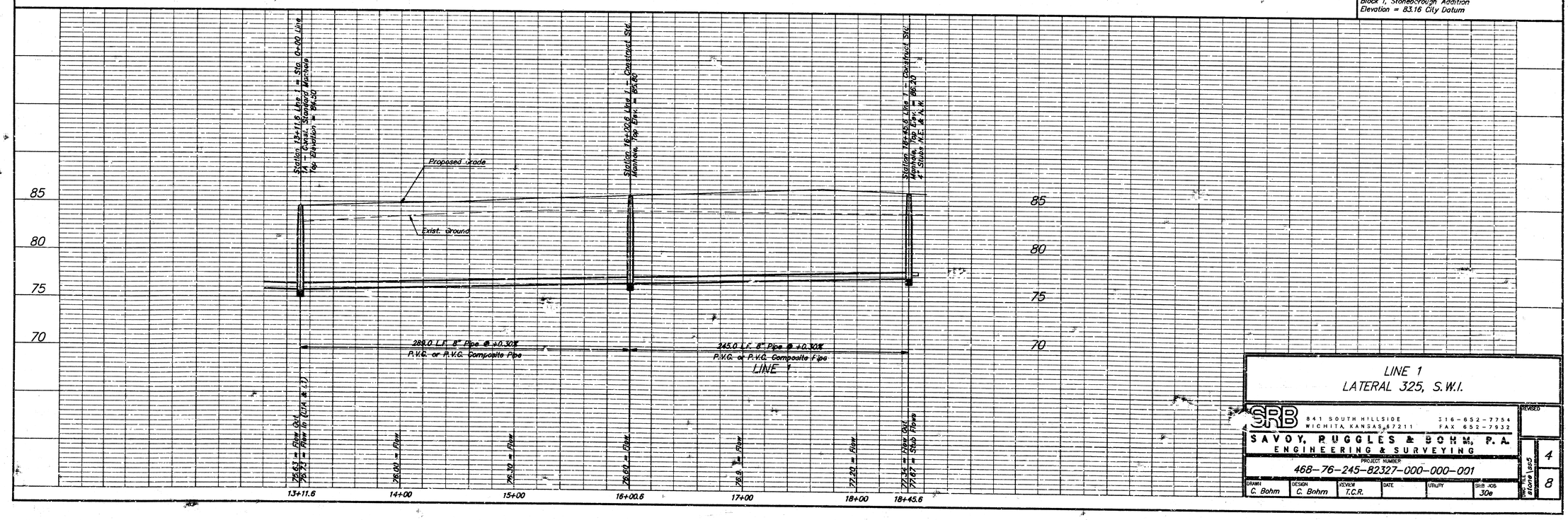

BENCH MARK: R.R. Spike in H.L.P. located at the N.E. Corner of Lot 15, Block 4, Stoneborough Addition
Elevation = 86.20 City Datum

BENCH MARK: Square Cut in top of curb, located on the south side of 53rd Street South, 135' west of the intersection Main and 53rd Street South
Elevation = 84.13 City Datum

BENCH MARK: Top of "T" Post located near the N.W. Corner of Lot 33, Block 2, Stoneborough Addition
Elevation = 81.49 City Datum

BENCH MARK: Square cut in top of curb, located 10' South and 14.5' east of the S.E. Corner of Lot 26, Block 1, Stoneborough Addition
Elevation = 83.16 City Datum

LINE 1
LATERAL 325, S.W.I.

SRB 841 SOUTH HILLSIDE WICHITA, KANSAS 67211 316-652-7754 FAX 652-7932
SAVOY, RUGGLES & BOHM, P.A.
ENGINEERING & SURVEYING

PROJECT NUMBER
468-76-245-82327-000-000-001

DRAWN	DESIGN	REVIEW	DATE	UTILITY	SRB JOB
C. Bohm	C. Bohm	T.C.R.			30e

REVISED

Horiz. 1"=40'
Vert. 1"=5'

4
8

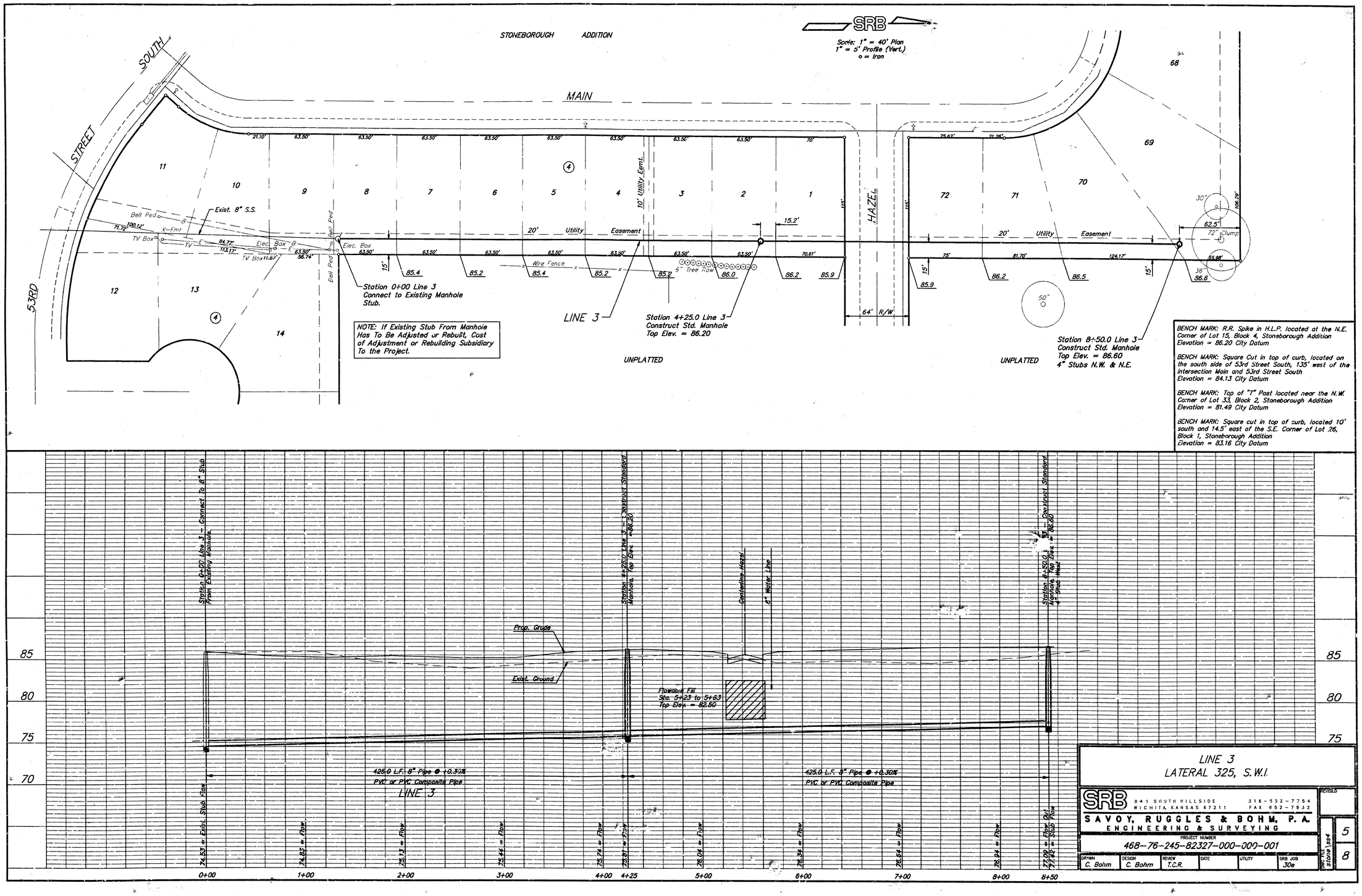

LINE 3
LATERAL 325, S.W.I.

SRB 641 SOUTH HILLSIDE WICHITA, KANSAS 67211 316-652-7754 FAX 652-7932

SAVOY, RUGGLES & BOHM, P.A.
ENGINEERING & SURVEYING

PROJECT NUMBER
468-76-245-82327-000-000-001

DRAWN	DESIGN	REVIEW	DATE	UTILITY	SRB JOB
C. Bohm	C. Bohm	T.C.R.			30e

REVISED

DWG FILE stone\ss4

5

8

BENCH MARK: Square Cut in top of curb, located on the south side of 53rd Street South, 1.35' west of the intersection Main and 53rd Street South
Elevation = 84.13 City Datum

BENCH MARK: Top of "T" Post located near the N.W. Corner of Lot 33, Block 2, Stoneborough Addition
Elevation = 81.49 City Datum

BENCH MARK: Square cut in top of curb, located 10' south and 14.5' east of the S.E. Corner of Lot 26, Block 1, Stoneborough Addition
Elevation = 83.16 City Datum

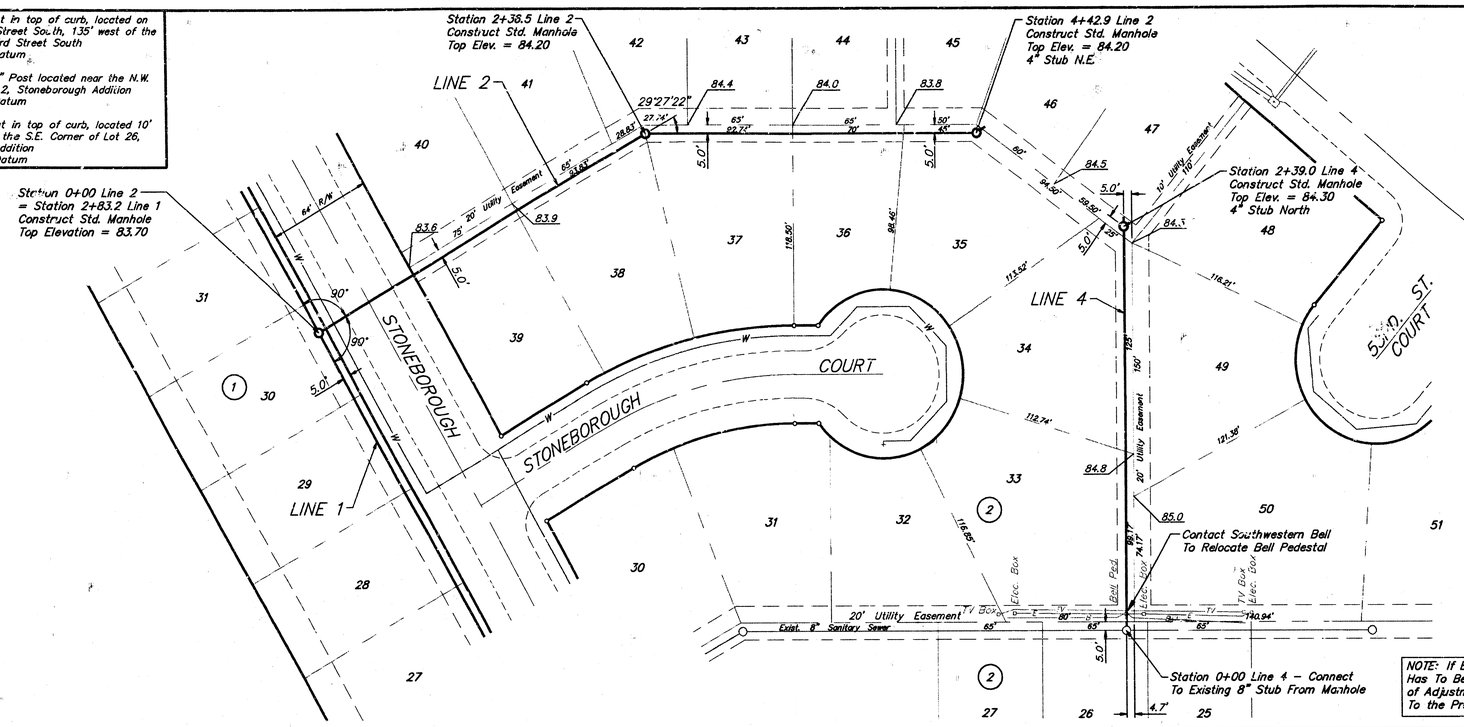

NOTE: If Existing Stub From Manhole Has To Be Adjusted ... Rebuilt, Cost of Adjustment or Rebuilding Subsidiary To the Project.

SRB

Scale: 1" = 40' Plan
1" = 5' Profile (Vert.)
o = Iron

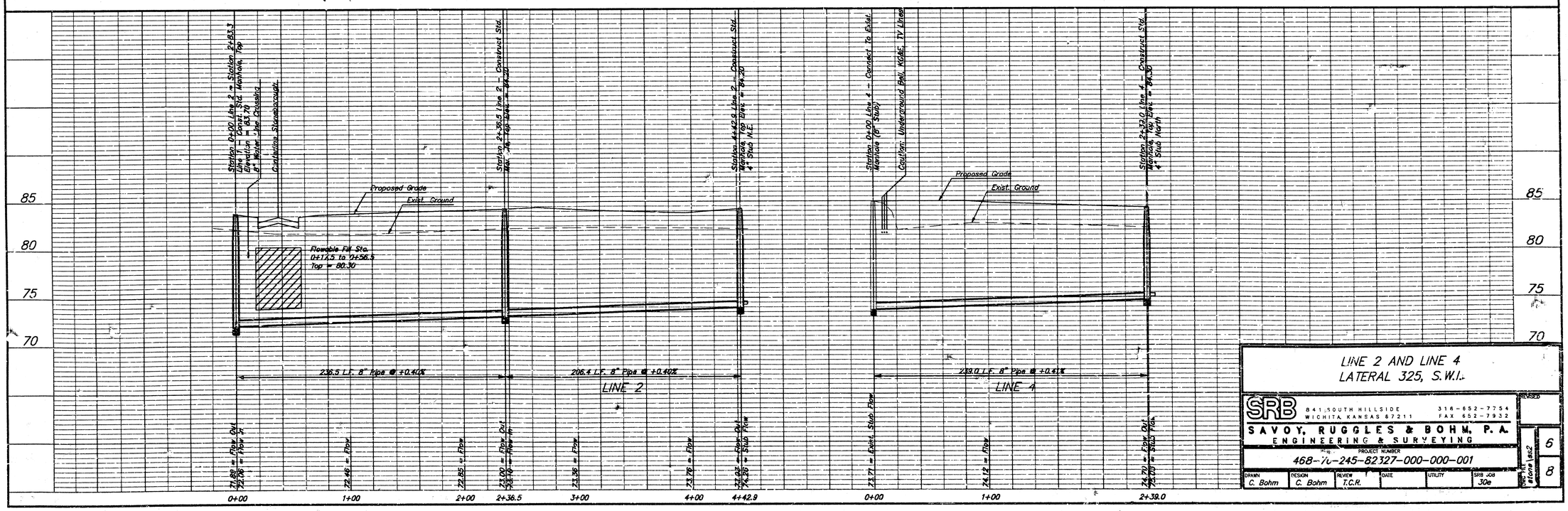

LINE 2 AND LINE 4
LATERAL 325, S.W.I.

SRB 841 SOUTH HILLSIDE WICHITA, KANSAS 67211 316-652-7754 FAX 652-7932
SAVOY, RUGGLES & BOHM, P.A.
ENGINEERING & SURVEYING

PROJECT NUMBER
468-76-245-82327-000-000-001

DRAWN	DESIGN	REVIEW	DATE	UTILITY	SRB Job
C. Bohm	C. Bohm	T.C.R.			30e

REVISED

Sheet No. 5 of 8 Sheets

SEWER APPURTENANCES DETAILS

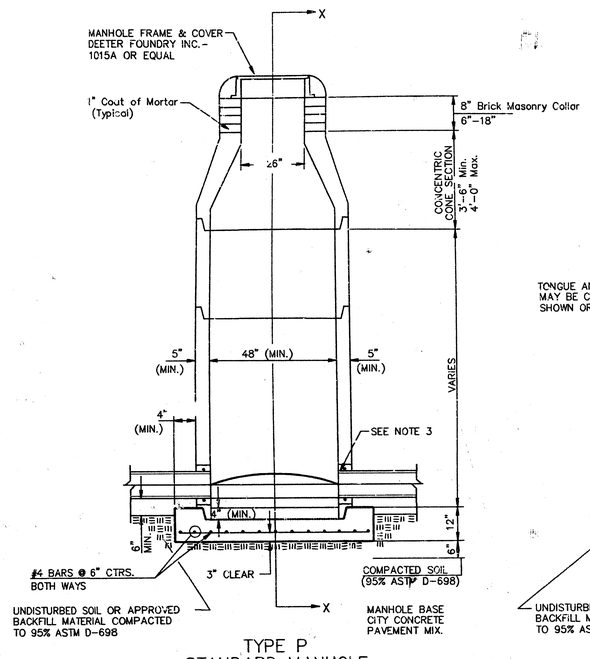

TYPE P
STANDARD MANHOLE

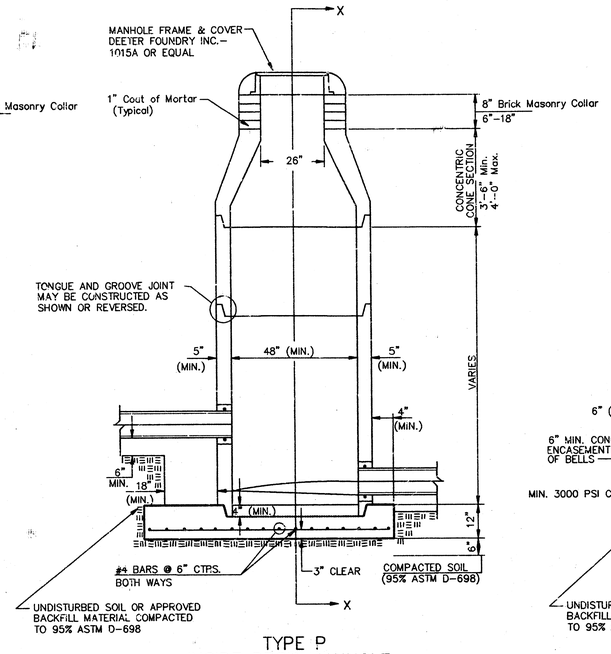

TYPE P
INSIDE DROP MANHOLE

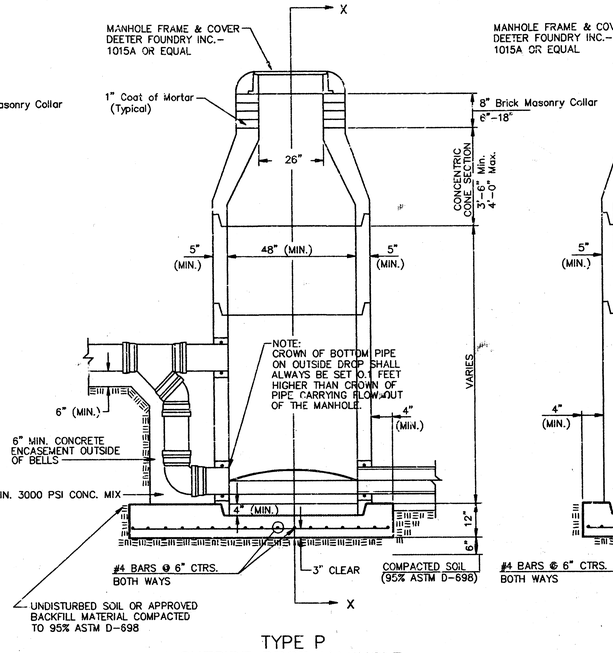

TYPE P
OUTSIDE DROP MANHOLE

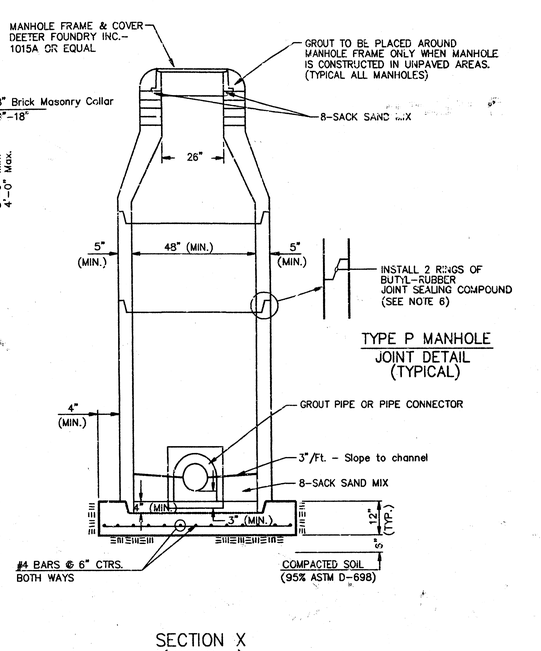

SECTION X
(TYPICAL)

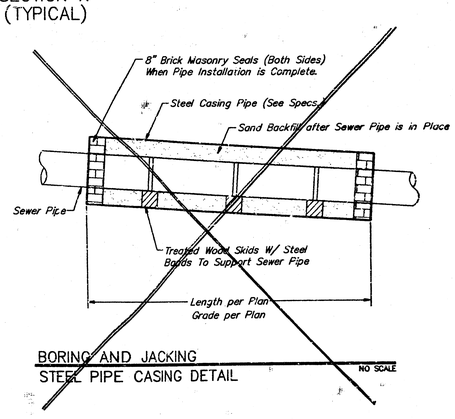

BORING AND JACKING
STEEL PIPE CASING DETAIL
NO SCALE

GENERAL NOTES

PRECAST MANHOLE NOTES

1. ALL PRECAST CONCRETE MANHOLE SECTIONS SHALL CONFORM TO THE LATEST REVISIONS OF A.S.T.M. C478 AS MODIFIED BY THE SPECIFICATIONS.
2. NON-SHRINK GROUT SHALL BE NON-METALLIC TYPE.
3. APPROVED FLEXIBLE WATERSTOP GASKETS SHALL BE INSTALLED TO JOIN THE SEWER TO THE MANHOLE WALL WHEN A.B.S. COMPOSITE PIPE OR P.V.C. PIPE IS USED. FOR OTHER TYPES OF PIPE THE SEWER SHALL BE GROUTED IN PLACE WITH NON-SHRINK GROUT. THE SEWER PIPE SHALL BE SUPPORTED WITH CONCRETE ENCASEMENT A MINIMUM OF 3 FEET FROM THE MANHOLE WALL AND TO THE FIRST JOINT FOR V.C.P. SUCH THAT THE JOINT REMAINS FLEXIBLE.
4. ALL INSIDE SURFACES OF THE CONCRETE MANHOLE WHICH WOULD BE EXPOSED TO SEWER GAS SHALL BE COATED WITH 2 COATS TNEMEC SERIES 66 HI-BUILD EPOXOLINE, DRY THICKNESS OF 8 MILS (MIN.)
5. EXTERIOR MANHOLE WALLS SHALL BE COATED WITH 1 COAT MOBILARMA 633 BITUMINOUS COATING.
6. JOINT SEALING COMPOUND SHALL BE KENT SEAL NO. 2 OR APPROVED EQUAL.
7. PRECAST MANHOLES SHALL BE SET AT LEAST 4 INCHES INTO THE MANHOLE BASE.
8. TOP OF MANHOLE FLOOR SLAB SHALL BE AT LEAST 3 INCHES BELOW THE FLOW LINE OF THE OUTLET PIPE TO INSURE SUFFICIENT MINIMUM THICKNESS OF SHAPED INVERT.
9. LIFTING HOLES SHALL BE FILLED WITH NON-SHRINK GROUT AND THE INTERIOR SURFACE COATED AS SPECIFIED.
10. MORTAR USED IN MASONRY CONSTRUCTION SHALL CONTAIN 8 SACKS OF CEMENT PER CUBIC YARD. CONCRETE USED IN MANHOLE BASES SHALL CONFORM TO THE REQUIREMENTS OF CONCRETE FOR CONCRETE PAVEMENT CONSTRUCTION AS SPECIFIED IN THE CITY STANDARD PAVING SPECIFICATIONS USING CITY CONCRETE PAVEMENT MIX WITHOUT AIR ENTRAINING ADMIXTURE. MORTAR SHALL BE PLACED AROUND THE MANHOLE RING AS SHOWN ON THE DRAWINGS WHEN MANHOLES ARE CONSTRUCTED IN UNPAVED AREAS. MANHOLES CONSTRUCTED WHERE PIPE SIZES ARE SMALLER THAN 24" SHALL HAVE AN INSIDE DIAMETER OF 4'. MANHOLES CONSTRUCTED WHERE PIPE SIZES ARE 24" OR LARGER SHALL HAVE AN INSIDE DIAMETER OF 5'. COMPLETED MANHOLE SHALL BE WITHOUT LEAKS AND WATER TIGHT.
11. REINFORCING STEEL SHALL BE INSTALLED IN THE MANHOLE BASES AND SHALL CONSIST OF NO. 4 BARS PLACED ON 6" CENTERS IN BOTH DIRECTIONS. THE MANHOLE BASE REINFORCEMENT SHALL BE PLACED AT LEAST 3" ABOVE THE BOTTOM OF THE MANHOLE BASE. ALL COSTS FOR FURNISHING AND INSTALLING REINFORCING STEEL SHALL BE INCLUDED IN THE UNIT PRICE BID FOR THE MANHOLE.
12. OPENINGS SHALL BE CUT INTO THE MANHOLE WALL WHEN OUTSIDE DROPS ARE CONSTRUCTED ON EXISTING MANHOLES. SUCH OPENINGS CUT INTO EXISTING MANHOLES SHALL BE AS SMALL AS PRACTICAL TO FACILITATE INSTALLING AND GROUTING THE NEW PIPE IN PLACE. WATERSTOP GASKETS SHALL BE USED WITH P.V.C. AND A.B.S. COMPOSITE PIPE. THE NEW PIPE SHALL BE GROUTED INTO THE OPENING USING AN APPROVED NONSHRINK GROUT FOR THE FULL MANHOLE WALL THICKNESS. THE EXTERIOR OF THE COMPLETED CONNECTION SHALL BE SEALED WITH AN APPROVED BITUMINOUS COATING SUCH THAT THE CONNECTION WILL BE WATER TIGHT. FLOOR OF MANHOLE SHALL BE MODIFIED TO FORM NEW FLOW CHANNEL FOR THE NEW CONNECTION AS INDICATED BY THE DRAWING. THIS WORK, INCLUDING MODIFICATION OF MANHOLE FLOOR, SHALL BE PAID FOR AT THE UNIT PRICE BID FOR OUTSIDE DROP STACK CONSTRUCTED ON EXISTING MANHOLE.
13. THE FLOORS OF ALL MANHOLES SHALL BE SHAPED WITH FLOW CHANNELS SUCH THAT THE MANHOLES WILL BE SELF CLEANING AND FREE OF AREAS WHERE SOLIDS COULD BE DEPOSITED AS SEWAGE FLOWS THROUGH THE MANHOLE FROM ALL INLET PIPES TO THE OUTLET PIPE. FLOW CHANNELS SHALL BE FORMED TO MATCH THE BOTTOM HALVES OF THE INFLOWING PIPES AND THE OUTFLOWING PIPE AS SHOWN BY THE DRAWINGS EXCEPT FOR INSIDE DROP MANHOLES. FLOW CHANNELS FOR INSIDE DROP MANHOLES SHALL BE CONSTRUCTED AS INDICATED BY THE DRAWING. MANHOLE FLOORS SHALL HAVE SLOPES OF 3 INCHES PER FOOT IN THE AREAS OUTSIDE OF THE FLOW CHANNELS SLOPED TOWARD THE FLOW CHANNELS. PIPES LAID THROUGH MANHOLES SHALL HAVE THE TOP HALF REMOVED TO NEAT LINES FOR THE FULL INSIDE DIAMETER OF THE MANHOLE. MANHOLE FLOORS SHALL THEN BE SHAPED AROUND THE BOTTOM HALF OF THE PIPE WHICH FORMS THE FLOW CHANNEL.
14. PIPES INSTALLED WITHIN THE EXCAVATION MADE FOR THE MANHOLE SHALL BE CRADLED WITH CONCRETE TO THE LIMITS OF THE MANHOLE EXCAVATION. WHEN CLAY PIPE IS USED, THE CRADLE SHALL EXTEND TO THE FIRST JOINT OUTSIDE THE MANHOLE. THE CRADLE SHALL BE TERMINATED AT THE CLAY PIPE JOINT IN A MANNER WHICH WILL MAINTAIN THE FLEXIBILITY OF THE JOINT. COST OF CRADLE WITHIN MANHOLE EXCAVATION OR TO CLAY PIPE JOINTS ADJACENT TO MANHOLE SHALL BE INCLUDED IN THE UNIT PRICE BID FOR THE MANHOLE.
15. MANHOLE COVER CASTINGS AND MANHOLE FRAME CASTINGS SHALL CONFORM TO THE REQUIREMENTS AS INDICATED IN THE STANDARD SPECIFICATIONS AND AS SHOWN IN THE STANDARD DETAIL DRAWING.
16. THE VERTICAL DROP IN INSIDE DROP MANHOLES SHALL NOT EXCEED 2' FOR INFLOWING PIPES SIZED 12" OR SMALLER AND 2' FOR INFLOWING PIPES LARGER THAN 12". THE CROWNS OF INFLOWING PIPES SHALL NEVER BE SET LOWER THAN THE CROWN OF THE OUTFLOWING PIPE.
17. STANDARD MANHOLES AND STANDARD INSIDE DROP MANHOLES SHALL BE BID AS STANDARD MANHOLES FOR THE TYPE AND DIAMETER INDICATED. OUTSIDE DROP MANHOLES SHALL BE BID AS STANDARD OUTSIDE DROP MANHOLES FOR THE TYPE AND DIAMETER INDICATED. ALL MANHOLE DIAMETERS WILL BE 4' UNLESS INDICATED OTHERWISE.
18. A BRICK MASONRY COLLAR SHALL BE INSTALLED BETWEEN THE CAST IRON FRAME AND THE CONCENTRIC CONE. THE COLLAR WILL HAVE 8" WALLS AND A VERTICAL HEIGHT OF 6" MINIMUM AND 18" MAXIMUM. A 1" COAT OF MORTAR WILL BE PLASTERED ON THE OUTSIDE OF THE COLLAR. THE USE OF PRE-CAST CONCRETE SPACERS FOR MANHOLE TOP ADJUSTMENT IS ALSO ALLOWED.

STANDARD MANHOLE DETAILS SEWER APPURTENANCES DETAILS CITY OF WICHITA, KANSAS	CDWG FILE	7 8

10-1-02

427 PC 27-6B

STONEBOROUGH

AN ADDITION TO WICHITA, SEDGWICK COUNTY, KANSAS

PBC

SCALE: 1"=160'

o = SET IRON
B.S.L. = BUILDING SETBACK LINE

B.M. - CITY OF WICHITA BENCH MARK DISC 44' EAST AND 52' SOUTH OF THE INTERSECTION OF THE CENTERLINES OF BROADWAY AND 55TH STREET SOUTH.
ELEV.=83.575 CITY DATUM
ELEV.=1270.975 M.S.L.

MINIMUM PAD ELEVATION AS FOLLOWS:
(LOWEST OPENING)
LOTS 18 THROUGH 56, BLOCK 1 =
84.2 CITY DATUM OR 1271.6 M.S.L.

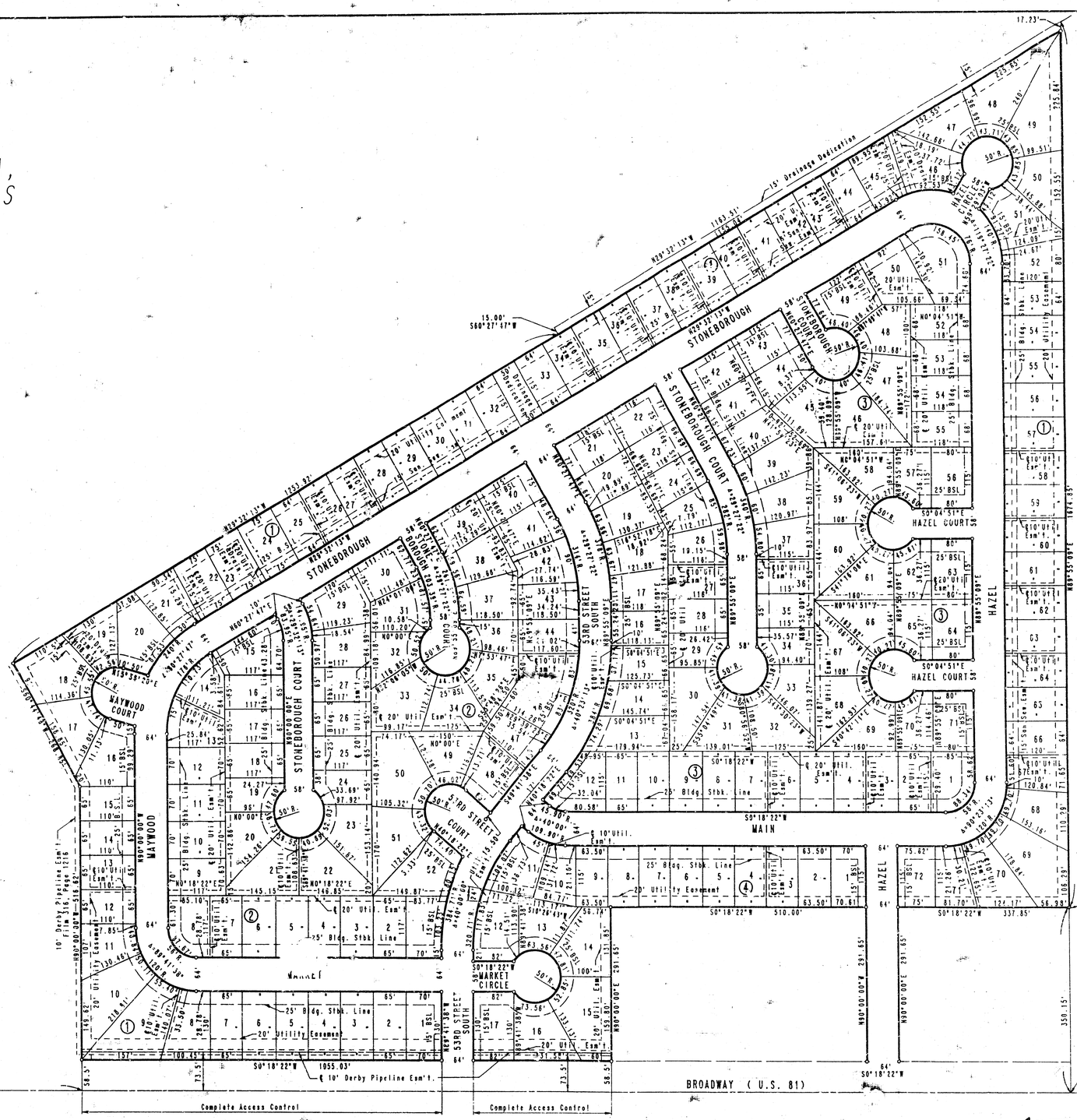

SHEET 2 OF 2

427 PC 27-6B