LATERAL 351, SOUTHWEST INTERCEPTOR

SANITARY SEWER IMPROVEMENTS TO SERVE

ROBBINS FARM 4TH ADDITION

Project Number

468-76-245-82485-000-000-001

Index Code: **742502**

CITY OF WICHITA, KANSAS

Michael E. Lindebak City Engineer

General Notes

1. Contractor will be required to provide notice to utility companies a minimum of twenty-four (24) hours prior to any excavation, as follows:

   Kansas One-Call 687-2470

   The Contractor must notify the following in case of an emergency.

Cablevision	262-4270
or	263-2061
K.G.E. Gas Service Company	383-8650
Kansas Gas & Electric Company	383-8600
Peoples Natural Gas Company	942-7600
Southwestern Bell Telephone Company	1-571-2611
City of Wichita Water Department	268-4908
City of Wichita Sewer Maintenance	268-4071

2. Underground utility service lines and overhead utility pole lines are to be adjusted as necessary by others prior to construction unless the plans specifically call for their adjustment by the Contractor or unless the plans specifically identify a utility to be adjusted by its owner during construction. Existing utilities and their location, as shown on the plans, represent the best information obtainable for design. The Contractor will be required to work around existing utilities within the right-of-way which do not conflict with proposed construction.

3. Rubble from the removal of miscellaneous structures and excess excavation which is to be wasted shall be disposed of on sites to be provided by the Contractor. These sites shall be approved by the Engineer as to suitability, appearance and site location. Locations that, in the opinion of the Engineer, will leave an unsightly appearance will not be approved. All disposal sites must be approved by the Kansas Department of Health and Environment. Material either stockpiled or disposed of in a flood plain would require a Kansas State Board of Agriculture permit. Any material dumped in waters of the United States or wetlands is subject to U.S. Corps. of Engineers permitting regulations. Any material buried or stockpiled beyond approved construction limits would require additional archaeological investigations unless buried in a previously approved borrow location.

4. Trees and shrubs in public right-of-way which are in direct conflict with proposed new construction shall be removed by the Contractor with the Engineer's approval. Trees and shrubs which are not in direct conflict with proposed new construction shall be saved and protected from damage.

5. Easement and final grading earthwork will not be a part of this project but will be performed by the Storm Sewer Contractor. All trench backfilling and grading for this project shall be to the pre-construction grades.

6. The Contractor shall be responsible for maintaining continuous flow of sewage through construction. Contractor's proposed method for maintaining sewage flow shall be approved by the Engineer. Cost of maintaining flow of sewage through construction will not be paid for directly and this cost shall be considered as subsidiary to the other pay items of work.

7. The Contractor shall be responsible for preserving property irons. The Contractor will be required to re-establish any property irons which are damaged or destroyed by his construction operations. Such irons shall be re-established by a licensed land surveyor in accordance with state laws.

8. All areas disturbed by construction operations shall be seeded with rye grass at a rate of 2 lbs. per 1000 sq. feet. Contractor to prepare ground to city specifications.

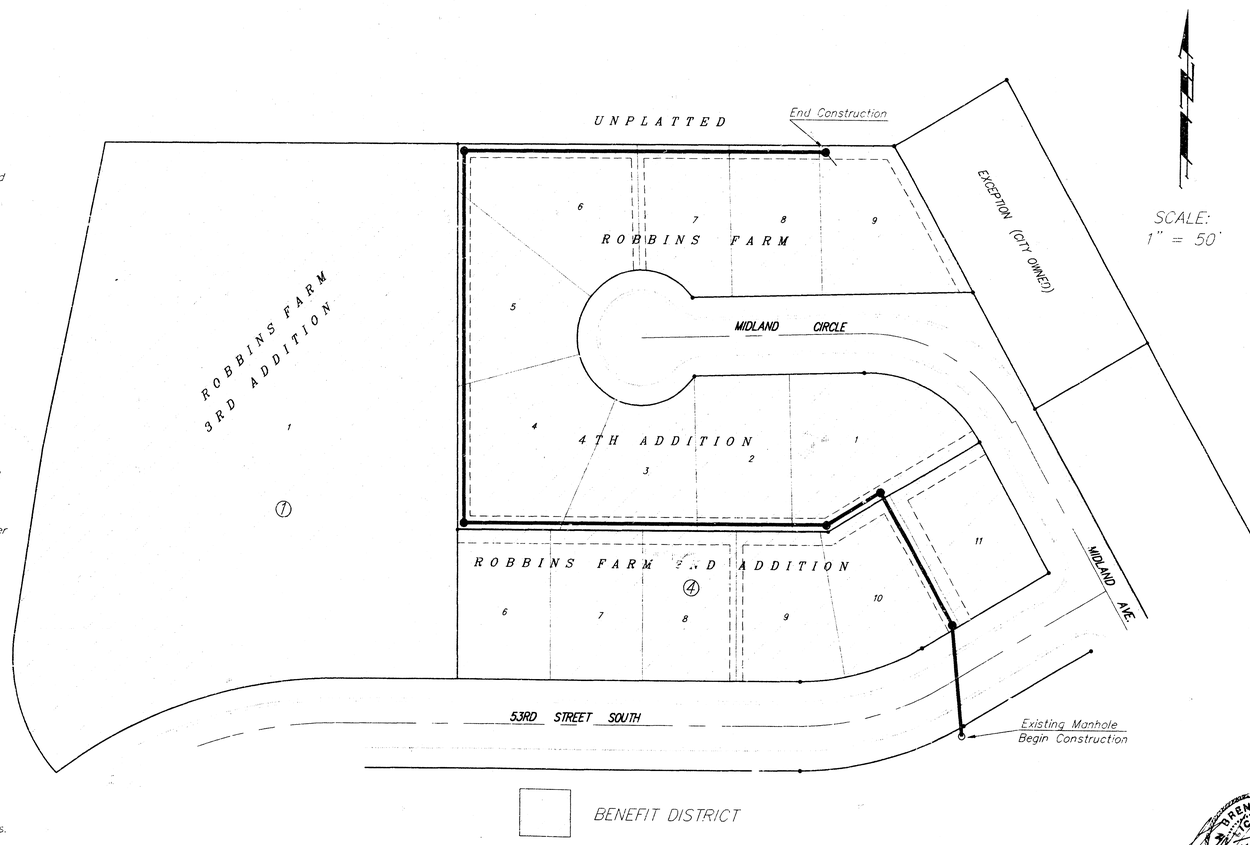

BENCHMARKS:

City Disc 45' W. & 48' N. of the S.W. Cor. S.E. 1/4, Sec. 20, T-28S, R-1E.
Elev. = 81.30 City Datum
= 1268.76 MSL

"□" T.C. East Side of Palisade 74'± South of the Intersection of Palisade & 53rd Street South
Elev. = 84.27 City Datum
= 1271.67 MSL

"□" T.C. West Side of Midland Ave. 163'± South of the Intersection of Midland Ave. & 53rd Street South.
Elev. = 82.17 City Datum
= 1269.57 MSL

INDEX:

1. Title Sheet
2. Line 1, Plan/Profile
3. Line 1, Plan/Profile, Cont.
4. Standard Manhole Detail
5. Shallow Manhole Detail
6. Manhole Frame and Cover Detail
7. Robbins Farm 4th Addition Plat

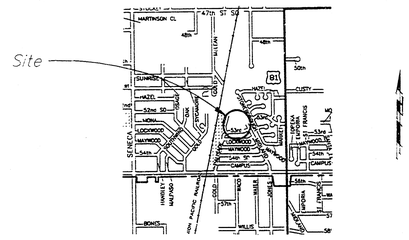
Site
47th ST. SO.
HAMPTON CT.
WILLOW
ELMWOOD
HAZEL
52nd
HOWARD
SYCAMORE
54th
MAYWOOD
54th
HAMPTON
54th
CAMPUS
53rd
53rd
53rd

BENCHMARKS:

City Disc. 45' W. & 48' N. of the S.W. Cor. S.E. 1/4, Sec. 20, T-28S, R-1E.
Elev. = 81.36 City Datum
= 1268.76 MSL

"□" T.C. East Side of Polisade 74'± South of the Intersection of Polisade & 53rd Street South.
Elev. = 84.27 City Datum
= 1271.67 MSL

"□" T.C. West Side of Midland Ave. 163'± South of the Intersection of Midland Ave. & 53rd Street South.
Elev. = 82.17 City Datum
= 1269.57 MSL

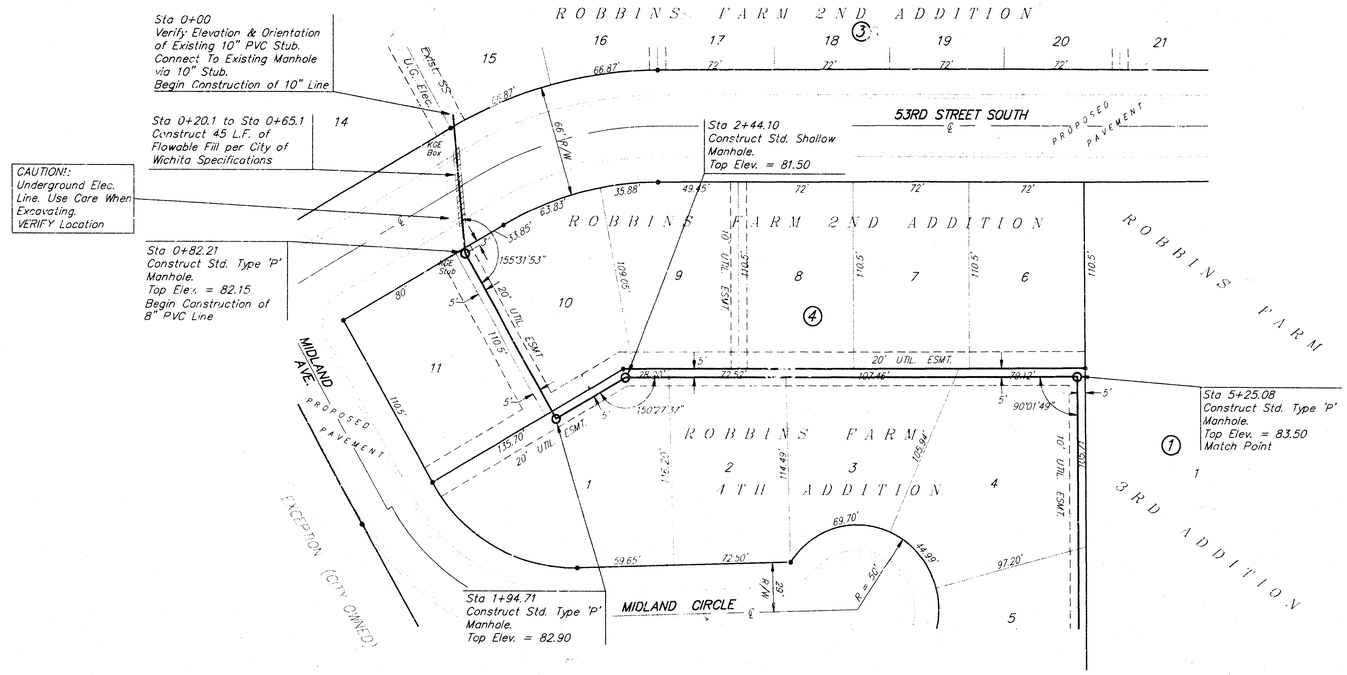

SCALE:
1"=40' Horizontal
1"=5' Vertical
• = Iron

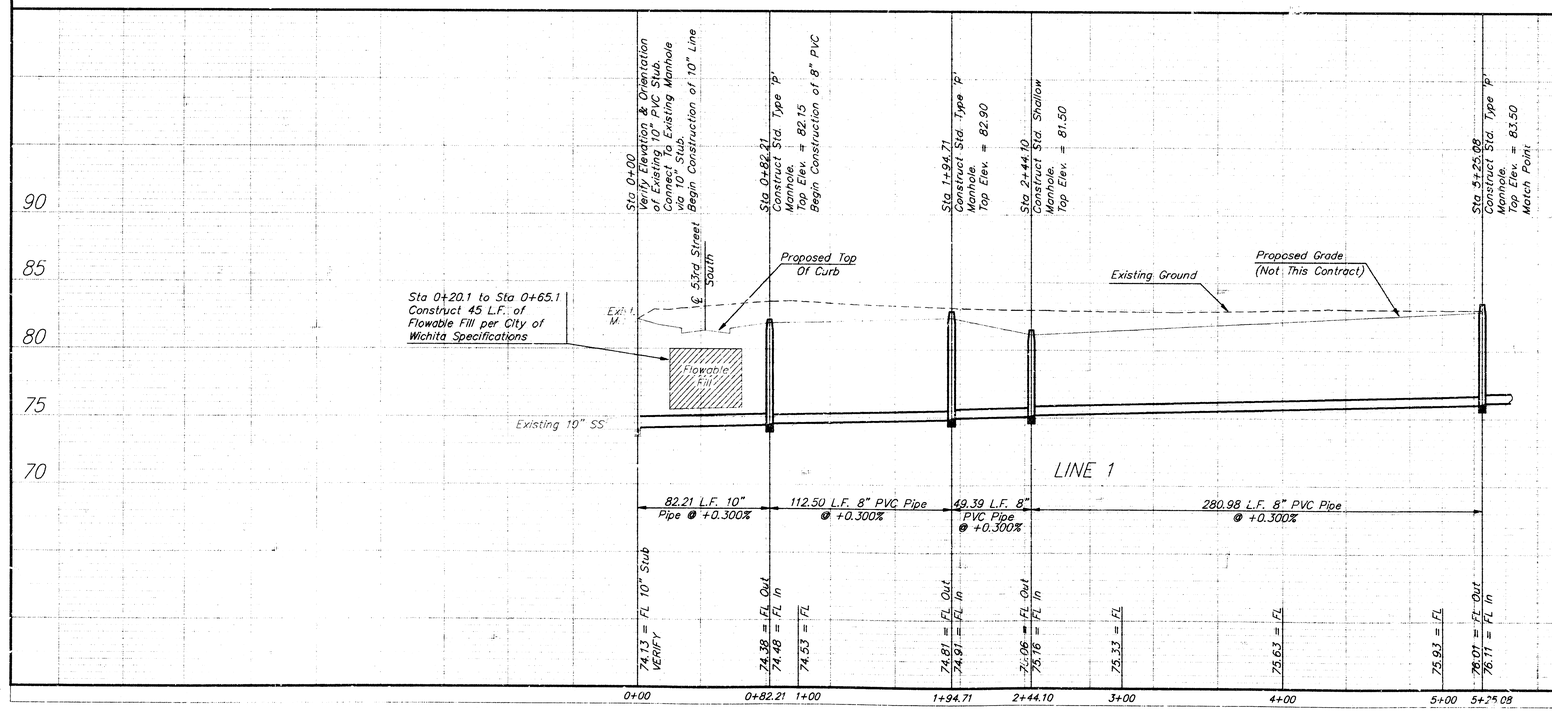

Lot 351, S.W.I.
Robbins Farm
4th Addition

BAUGHMAN COMPANY P.A.
ENGINEERING, SURVEYING, & PLANNING
316-262-7271 • 315 S. 5 • WICHITA, KANSAS 67211

PROJECT NUMBER	SHEET
488-78-245-82485-000-000-001	2 of 7

DESIGN	DRAWN	APPROVED	DATE	SCALE
BF/DY	DY		12/85	Noted

BENCHMARKS:

City Disc 45' W. & 48' N. of the S.W. Cor. S.E. 1/4, Sec. 20, T-28S, R-1E.
Elev. = 81.36 City Datum
= 1268.76 MSL

"□" T.C. East Side of Palisade 74'± South of the Intersection of Palisade & 53rd Street South.
Elev. = 84.27 City Datum
= 1271.67 MSL

"□" T.C. West Side of Midland Ave. 153'± South of the Intersection of Midland Ave. & 53rd Street South.
Elev. = 82.17 City Datum
= 1269.57 MSL

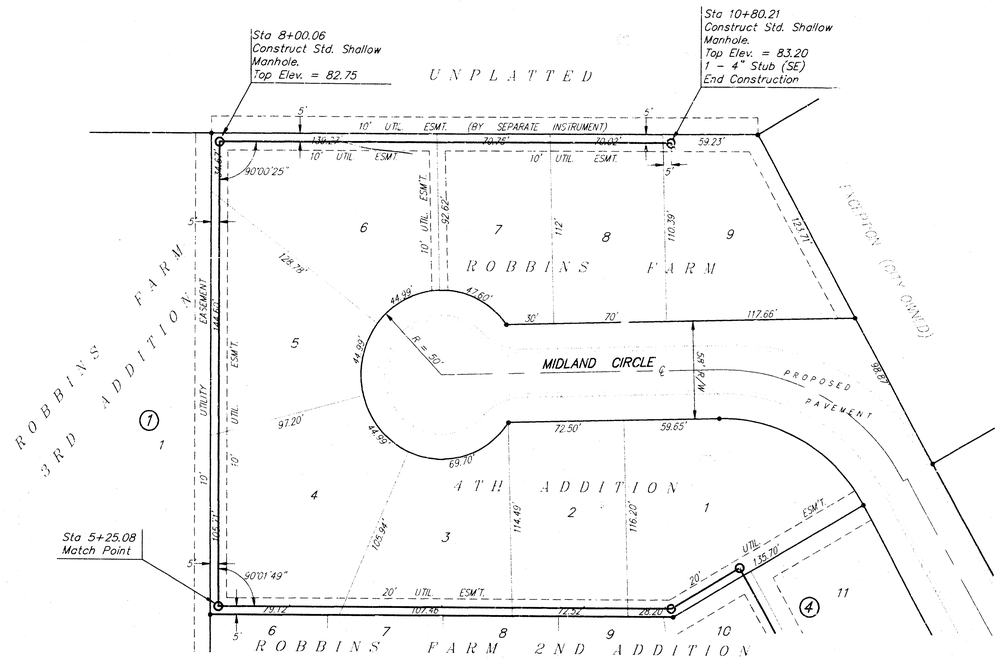

SCALE:
1"=40' Horizontal
1"=5' Vertical
• = Iron

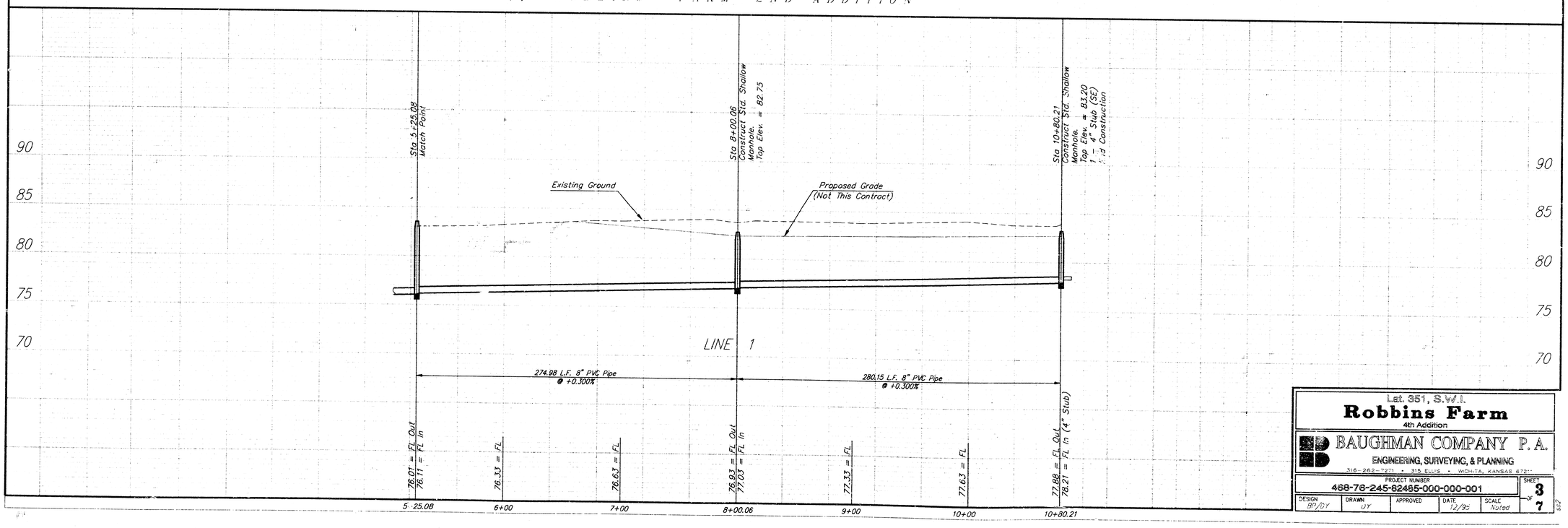

Lot 351, S.W.I.
Robbins Farm
4th Addition

BAUGHMAN COMPANY P.A.
ENGINEERING, SURVEYING, & PLANNING
316-262-7271 • 315 ELLIS • WICHITA, KANSAS 67211

PROJECT NUMBER	SHEET
468-76-245-82485-000-000-001	3 OF 7

DESIGN	DRAWN	APPROVED	DATE	SCALE
BP/DY	DY		12/95	Noted

SEWER APPURTENANCES DETAILS

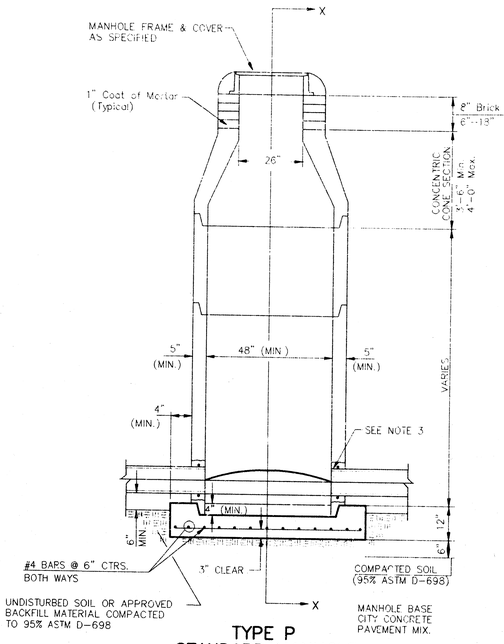

TYPE P
STANDARD MANHOLE

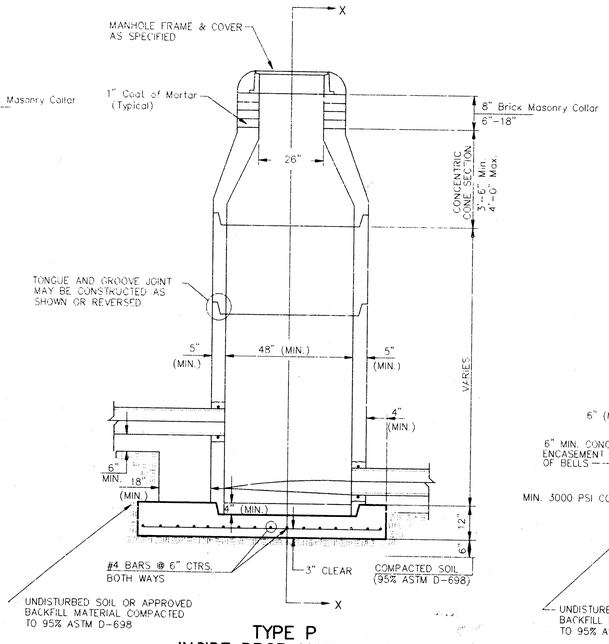

TYPE P
INSIDE DROP MANHOLE

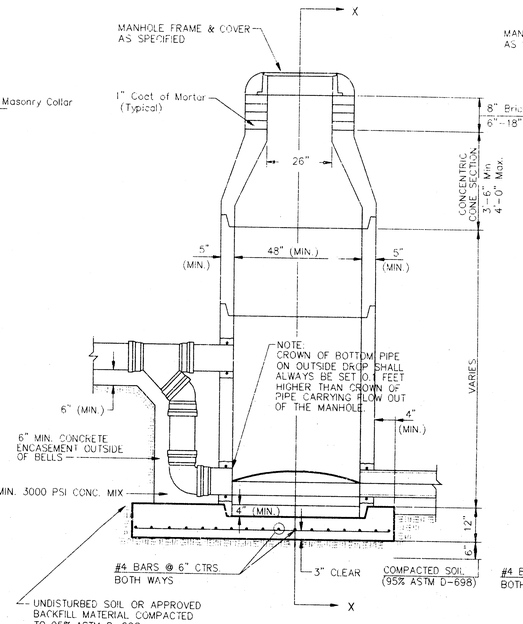

TYPE P
OUTSIDE DROP MANHOLE

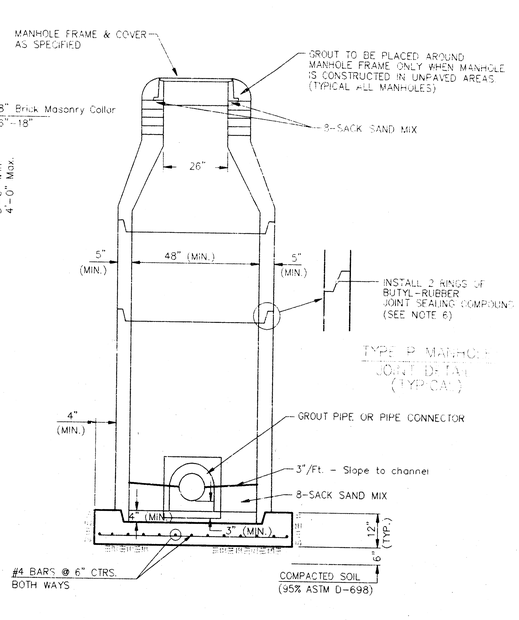

SECTION X
(TYPICAL)

GENERAL NOTES

PRECAST MANHOLE NOTES

1. ALL PRECAST CONCRETE MANHOLE SECTIONS SHALL CONFORM TO THE LATEST REVISIONS OF A.S.T.M. C478 AS MODIFIED BY THE SPECIFICATIONS.
2. NON-SHRINK GROUT SHALL BE NON-METALLIC TYPE.
3. APPROVED FLEXIBLE WATERSTOP GASKETS SHALL BE INSTALLED TO JOIN THE SEWER TO THE MANHOLE WALL WHEN A.B.S. COMPOSITE PIPE OR P.V.C. PIPE IS USED. FOR OTHER TYPES OF PIPE THE SEWER SHALL BE GROUTED IN PLACE WITH NON-SHRINK GROUT. THE SEWER PIPE SHALL BE SUPPORTED WITH CONCRETE ENCASEMENT A MINIMUM OF 3 FEET FROM THE MANHOLE WALL AND TO THE FIRST JOINT FOR V.C.P. SUCH THAT THE JOINT REMAINS FLEXIBLE.
4. ALL INSIDE SURFACES OF THE CONCRETE MANHOLE WHICH WOULD BE EXPOSED TO SEWER GAS SHALL BE COATED WITH 2 COATS TNEMEC SERIES 66 HI-BUILD EPOXOLINE, DRY THICKNESS OF 8 MILS (MIN.)
5. EXTERIOR MANHOLE WALLS SHALL BE COATED WITH 1 COAT MOBILARMA 633 BITUMINOUS COATING.
6. JOINT SEALING COMPOUND SHALL BE KENT SEAL NO. 2 OR APPROVED EQUAL.
7. PRECAST MANHOLES SHALL BE SET AT LEAST 4 INCHES INTO THE MANHOLE BASE.
8. TOP OF MANHOLE FLOOR SLAB SHALL BE AT LEAST 3 INCHES BELOW THE FLOW LINE OF THE OUTLET PIPE TO INSURE SUFFICIENT MINIMUM THICKNESS OF SHAPED INVERT.
9. LIFTING HOLES SHALL BE FILLED WITH NON-SHRINK GROUT AND THE INTERIOR SURFACE COATED AS SPECIFIED.
10. MORTAR USED IN MASONRY CONSTRUCTION SHALL CONTAIN 8 SACKS OF CEMENT PER CUBIC YARD. CONCRETE USED IN MANHOLE BASES SHALL CONFORM TO THE REQUIREMENTS OF CONCRETE FOR CONCRETE PAVEMENT CONSTRUCTION AS SPECIFIED IN THE CITY STANDARD PAVING SPECIFICATIONS USING CITY CONCRETE PAVEMENT MIX WITHOUT AIR ENTRAINING ADMIXTURE. MORTAR SHALL BE PLACED AROUND THE MANHOLE RING AS SHOWN ON THE DRAWINGS WHEN MANHOLES ARE CONSTRUCTED IN UNPAVED AREAS. MANHOLES CONSTRUCTED WHERE PIPE SIZES ARE SMALLER THAN 24" SHALL HAVE AN INSIDE DIAMETER OF 4'. MANHOLES CONSTRUCTED WHERE PIPE SIZES ARE 24" OR LARGER SHALL HAVE AN INSIDE DIAMETER OF 5'. COMPLETED MANHOLE SHALL BE WITHOUT LEAKS AND WATER TIGHT.
11. REINFORCING STEEL SHALL BE INSTALLED IN THE [illegible] BASES AND SHALL CONSIST OF NO. 4 BARS PLACED ON 6" CENTERS BOTH DIRECTIONS. THE MANHOLE BASE REINFORCEMENT SHALL BE PLACED AT LEAST 3" ABOVE THE BOTTOM OF THE MANHOLE BASE. ALL COSTS FOR FURNISHING AND INSTALLING REINFORCING STEEL SHALL BE INCLUDED IN THE UNIT PRICE BID FOR THE MANHOLE.
12. OPENINGS SHALL BE CUT INTO THE MANHOLE WALL WHEN OUTSIDE DROPS ARE CONSTRUCTED ON EXISTING MANHOLES. SUCH OPENINGS CUT INTO EXISTING MANHOLES SHALL BE AS SMALL AS PRACTICAL TO FACILITATE INSTALLING AND GROUTING THE NEW PIPE IN PLACE. WATERSTOP GASKETS SHALL BE USED WITH P.V.C. AND A.B.S. COMPOSITE PIPE. THE NEW PIPE SHALL BE GROUTED INTO THE OPENING USING AN APPROVED NONSHRINK GROUT FOR THE FULL MANHOLE WALL THICKNESS. THE EXTERIOR OF THE COMPLETED CONNECTION SHALL BE SEALED WITH AN APPROVED BITUMINOUS COATING SUCH THAT THE CONNECTION WILL BE WATER TIGHT. FLOOR OF MANHOLE SHALL BE MODIFIED TO FORM NEW FLOW CHANNEL FOR THE NEW CONNECTION AS INDICATED BY THE DRAWING. THIS WORK, INCLUDING MODIFICATION OF MANHOLE FLOOR, SHALL BE PAID FOR AT THE UNIT PRICE BID FOR OUTSIDE DROP STACK CONSTRUCTED ON EXISTING MANHOLE.
13. THE FLOORS OF ALL MANHOLES SHALL BE SHAPED WITH FLOW CHANNELS SUCH THAT THE MANHOLES WILL BE SELF CLEANING AND FREE OF AREAS WHERE SOLIDS COULD BE DEPOSITED AS SEWAGE FLOWS THROUGH THE MANHOLE FROM ALL INLET PIPES TO THE OUTLET PIPE. FLOW CHANNELS SHALL BE FORMED TO MATCH THE BOTTOM HALVES OF THE INFLOWING PIPES AND THE OUTFLOWING PIPE AS SHOWN BY THE DRAWINGS EXCEPT FOR INSIDE DROP MANHOLES. FLOW CHANNELS FOR INSIDE DROP MANHOLES SHALL BE CONSTRUCTED AS INDICATED BY THE DRAWING. MANHOLE FLOORS SHALL HAVE SLOPES OF 3 INCHES PER FOOT IN THE AREAS OUTSIDE OF THE FLOW CHANNELS SLOPED TOWARD THE FLOW CHANNELS. PIPES LAID THROUGH MANHOLES SHALL HAVE THE TOP HALF REMOVED TO NEAT LINES FOR THE FULL INSIDE DIAMETER OF THE MANHOLE. MANHOLE FLOORS SHALL THEN BE SHAPED AROUND THE BOTTOM HALF OF THE PIPE WHICH FORMS THE FLOW CHANNEL.
14. PIPES INSTALLED WITHIN THE EXCAVATION MADE FOR THE MANHOLE SHALL BE CRADLED WITH CONCRETE TO THE LIMITS OF THE MANHOLE EXCAVATION. WHEN CLAY PIPE IS USED, THE CRADLE SHALL EXTEND TO THE FIRST JOINT OUTSIDE THE MANHOLE. THE CRADLE SHALL BE TERMINATED AT THE CLAY PIPE JOINT IN A MANNER WHICH WILL MAINTAIN THE FLEXIBILITY OF THE JOINT. COST OF CRADLE WITHIN MANHOLE EXCAVATION OR TO CLAY PIPE JOINTS ADJACENT TO MANHOLE SHALL BE INCLUDED IN THE UNIT PRICE BID FOR THE MANHOLE.
15. MANHOLE COVER CASTINGS AND MANHOLE FRAME CASTINGS SHALL CONFORM TO THE REQUIREMENTS AS INDICATED IN THE STANDARD SPECIFICATIONS AND AS SHOWN IN THE STANDARD DETAIL DRAWING.
16. THE VERTICAL DROP IN INSIDE DROP MANHOLES SHALL NOT EXCEED 2' FOR INFLOWING PIPES SIZED 12" OR SMALLER AND 2' FOR INFLOWING PIPES LARGER THAN 12". THE CROWNS OF INFLOWING PIPES SHALL NEVER BE SET LOWER THAN THE CROWN OF THE OUTFLOWING PIPE.
17. STANDARD MANHOLES AND STANDARD INSIDE DROP MANHOLES SHALL BE BID AS STANDARD MANHOLES FOR THE TYPE AND DIAMETER INDICATED. OUTSIDE DROP MANHOLES SHALL BE BID AS STANDARD OUTSIDE DROP MANHOLES FOR THE TYPE AND DIAMETER INDICATED. ALL MANHOLE DIAMETERS WILL BE 4' UNLESS INDICATED OTHERWISE.
18. A BRICK MASONRY COLLAR SHALL BE INSTALLED BETWEEN THE CAST IRON FRAME AND THE CONCENTRIC CONE. THE COLLAR WILL HAVE 8" WALLS AND A VERTICAL HEIGHT OF 6" MINIMUM AND 18" MAXIMUM. A 1" COAT OF MORTAR WILL BE PLASTERED ON THE OUTSIDE OF THE COLLAR. THE USE OF PRE-CAST CONCRETE SPACERS FOR MANHOLE TOP ADJUSTMENT IS ALSO ALLOWED.

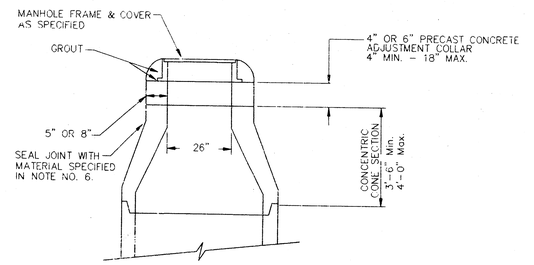

ALTERNATE CONSTRUCTION
IN UNPAVED AREAS

CITY OF WICHITA
STD. MANHOLE DETAILS
& SEWER APPURTENANCES DETAILS

BAUGHMAN COMPANY P.A.
ENGINEERING, SURVEYING, & PLANNING
316-262-1271 • 318 ELLIS • WICHITA, KANSAS 67211

PROJECT NUMBER				SHEET
488-76-245-82485-000-000-001				4 OF 7
DESIGN	DRAWN NOV.93	APPROVED	DATE	SCALE None

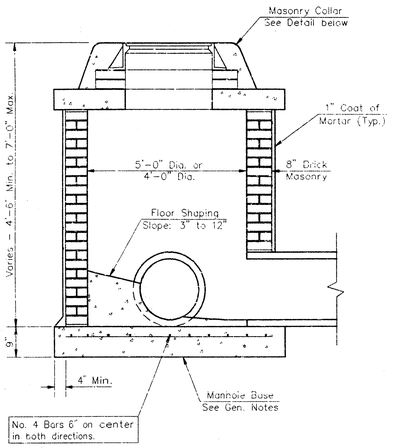

SHALLOW TYPE "A" MANHOLE

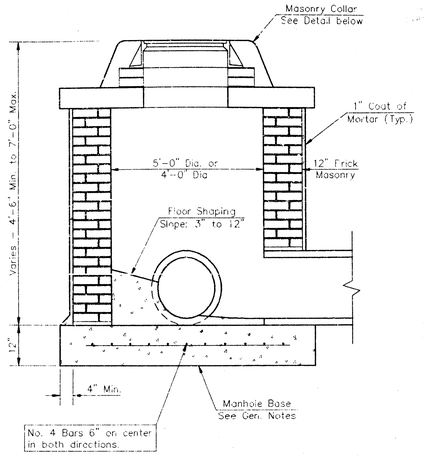

SHALLOW TYPE "B" MANHOLE

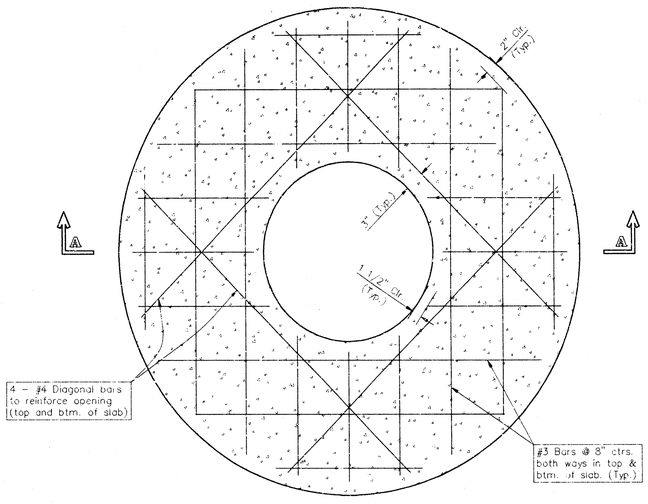

PLAN

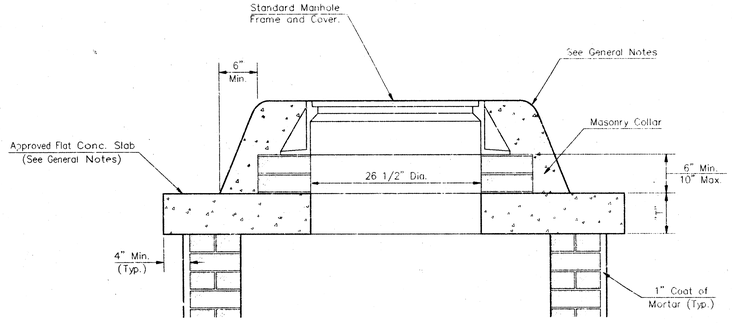

MASONRY COLLAR DETAIL

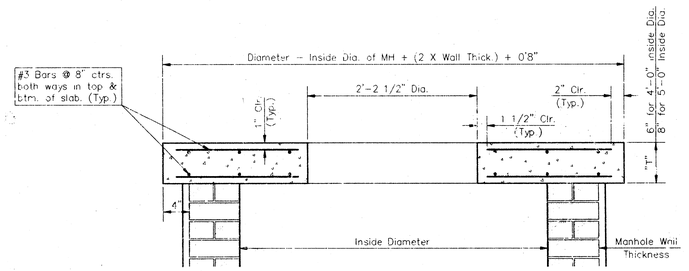

SECTION A-A

FLAT CONCRETE SLAB DETAILS

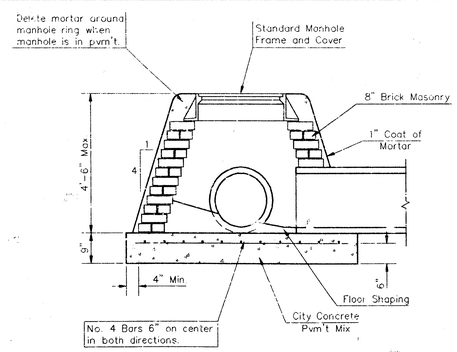

SPECIAL SHALLOW TYPE "A" MANHOLE

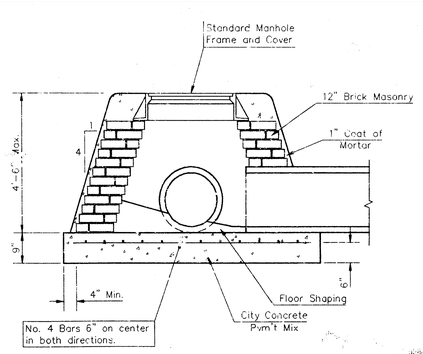

SPECIAL SHALLOW TYPE "B" MANHOLE

GENERAL NOTES

1. Mortar used in masonry construction shall contain 8 sacks of cement per cubic yard. Concrete used in manhole bases shall conform to the requirements of concrete for concrete pavement construction as specified in the city standard paving specifications using city concrete cement mix without air entraining admixture. Mortar shall be placed around the manhole ring as shown on the drawings when manholes are constructed in unpaved areas. Type "A" shallow manholes can be used on sewers when the manhole is not located within public street pavement. Manholes constructed where pipe sizes are smaller than 24" shall have an inside diameter of 4'. Manholes constructed where pipe sizes are 24" or larger shall have an inside diameter of 5'. Completed manhole shall be without leaks and water tight.

2. Reinforcing steel shall be installed in the manhole bases and shall consist of no. 4 bars placed on 6" centers in both directions. The manhole base reinforcement shall be placed 6" above the bottom of the manhole base. All costs for furnishing and installing reinforcing steel shall be included in the unit price bid for the manhole.

3. The floors of all manholes shall be shaped with flow channels such that the manholes will be self cleaning and free of areas where solids could be deposited as sewage flows through the manhole from all inlet pipes to the outlet pipe. Flow channels shall be formed to match the bottom halves of the inflowing pipes and the outflowing pipe as shown by the drawings. Manhole floors shall have slopes of 3 inches per foot in the areas outside of the flow channels sloped toward the flow channels. Pipes laid through manholes shall have the top half removed to neat lines for the full inside diameter of the manhole. Manhole floors shall then be shaped around the bottom half of the pipe which forms the flow channel.

4. Pipes installed within the excavation made for the manhole shall be cradled with concrete to the limits of the manhole excavation. When clay pipe is used, the cradle shall extend to the first joint outside the manhole. The cradle shall be terminated at the clay pipe joint in a manner which will maintain the flexibility of the joint. Cost of cradle within manhole excavation or to clay pipe joints adjacent to manhole shall be included in the unit price bid for the manhole.

5. Manhole cover castings and manhole frame castings shall conform to the requirements as indicated in the standard specifications and as shown in the standard detail drawings.

6. The crowns of inflowing pipes shall never be set lower than the crown of the outflowing pipe.

7. Standard shallow manholes type "A" and "B" shall be paid for at the unit price bid per each for the type and diameter indicated. Standard special shallow manholes type "A" and "B" shall be paid for at the unit price bid per each for the type indicated. All standard shallow manhole diameters will be 4' unless indicated otherwise.

8. All brick used in manhole construction shall meet Grade SW of ASTM C652 or C62-87.

CITY OF WICHITA, KANSAS

STD. SHALLOW MANHOLES

TYPE "A" AND TYPE "B"

BAUGHMAN COMPANY P.A.
ENGINEERING, SURVEYING, & PLANNING
316-262-7271 • 315 ELLIS • WICHITA, KANSAS 67211

PROJECT NUMBER	SHEET
408-78-245-82485-000-000-001	5 OF 7

DESIGN	DRAWN	APPROVED	DATE	SCALE
				None

DETAIL STD SHALLOW MH

MANHOLE FRAME AND COVER DETAIL

ADOPTED AS STANDARD DESIGN BY
CITY OF WICHITA, KANSAS

MANHOLE COVER
Weight = 180 Lbs.

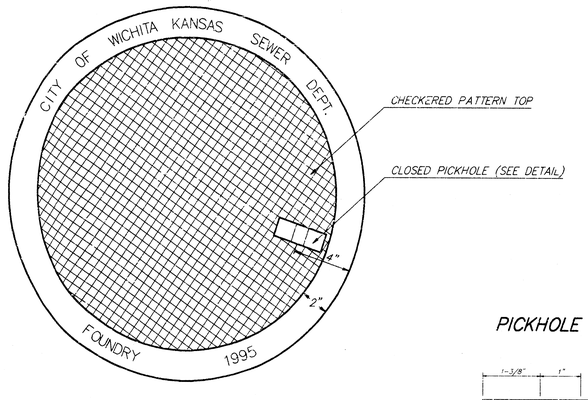

TOP VIEW

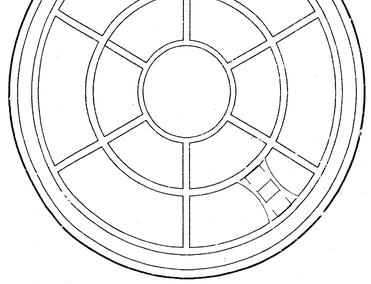

BOTTOM VIEW

PICKHOLE DETAIL

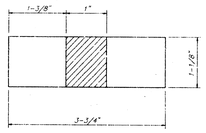

TOP VIEW

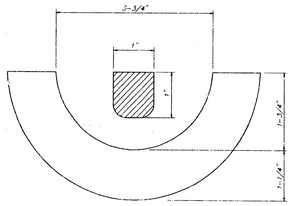

SECTION VIEW

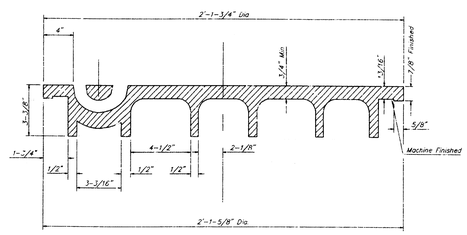

SECTION VIEW

MANHOLE FRAME
Weight = 240 Lbs.

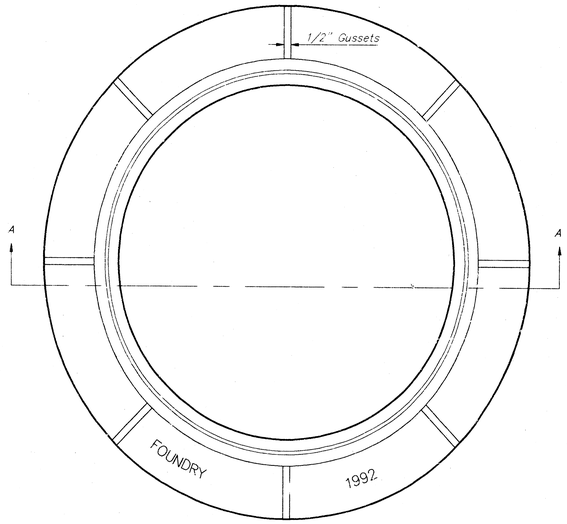

TOP VIEW

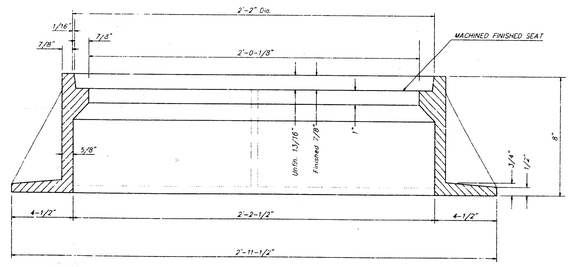

SECTION A–A

GENERAL NOTES

MANHOLE CASTINGS SHALL BE MANUFACTURED USING GOOD QUALITY GRAY IRON CONFORMING TO CLASS 30 OF A.S.T.M. DESIGNATION A-48. DIMENSIONS AND WEIGHTS SHOWN ON THE DETAILED DRAWINGS SHALL BE CONSIDERED AS MINIMUM REQUIREMENTS AND ANY DEVIATIONS FROM THE DIMENSIONS SHOWN MUST BE SPECIFICALLY APPROVED. THE FINISHED CASTINGS SHALL BE OF UNIFORM QUALITY, FREE FROM BLOWHOLES, POROSITY, HARD SPOTS, SHRINKAGE DISTORTIONS OR OTHER DEFECTS.

MANHOLE CASTINGS SHALL BE COATED WITH AN ASPHALT PAINT RESULTING IN A SMOOTH, TOUGH AND TENACIOUS COATING WHICH IS NOT BRITTLE OR TACKY.

MANHOLE CASTINGS SHALL BE MANUFACTURED SUCH THAT A COVER MANUFACTURED BY ANY ONE FOUNDARY WILL FIT INTERCHANGEABLY INTO A FRAME MANUFACTURED BY ANOTHER FOUNDRY AND STILL MEET ALLOWABLE CLEARANCES AND NON-ROCKING REQUIREMENTS. THIS WILL REQUIRE MANUFACTURING OF THE MATCHING FACES ON THE COVER AND THE FRAME TO CLOSE TOLERANCES.

THE OUTSIDE CIRCUMFERENCE OF THE VERTICAL FACE OF THE COVER AND THE INSIDE CIRCUMFERENCE OF THE VERTICAL FACE IN THE FRAME RECESS SHALL BE MANUFACTURED TO TOLERANCES SUCH THAT THE CLEARANCE BETWEEN THE COVER AND FRAME WILL NOT EXCEED 1/8" AT ANY POINT AROUND THE CIRCUMFERENCE OF THE COVER. THE SEATING SURFACES BETWEEN THE COVER AND FRAME SHALL BE MACHINED SUCH AS THESE SURFACES SHALL MAKE FULL CONTACT FOR THEIR FULL CIRCUMFERENCE TO PRECLUDE THE COVER FROM ROCKING IN THE FRAME.

THE MANHOLE FRAME AND COVER SHALL BE MARKED WITH LETTERING INDICATING THE NAME OF THE MANUFACTURER AND THE YEAR WHEN THE COVER OR FRAME WAS CAST. THE COVER SHALL BE FURTHER IDENTIFIED WITH REGARDS TO OWNERSHIP USING LETTERS AT LEAST 1 INCH IN HEIGHT. THIS IDENTIFICATION SHALL BE "CITY OF WICHITA SEWER DEPARTMENT". THE WORD DEPARTMENT MAY BE ABBREVIATED. THE TEXTURE OF THE TOP SURFACE OF THE COVER SHALL BE MANUFACTURED IN A CHECKERED PATTERN DESIGN AS INDICATED ON THE DRAWINGS. SMOOTH BLOCKOUTS SHALL BE UTILIZED TO HIGHLIGHT THE LETTERING ON THE COVER SURFACE. THE TOTAL AREA OF SMOOTH SURFACE BLOCKOUT SHALL NOT EXCEED THE AREA AS INDICATED ON THE DRAWING. POSITIONING OF SMOOTH BLOCKOUTS AND LETTERING MAY VARY FROM THAT SHOWN ON THE DETAILED DRAWING.

MANHOLE DETAIL
FRAME & COVER
ADOPTED AS STANDARD BY THE CITY OF WICHITA, KS

BAUGHMAN COMPANY P. A.
ENGINEERING, SURVEYING, & PLANNING
316 262-7271 • 315 ELLIS • WICHITA, KANSAS 67211

PROJECT NUMBER				SHEET
468-76-245-82485-000-000-001				6 OF 7
DESIGN	DRAWN	APPROVED	DATE	SCALE: None

ROBBINS FARM 4TH ADDITION
WICHITA, SEDGWICK COUNTY, KANSAS

Scale: 1" = 30'

● = 3/4" PEC IRON PIPE (FOUND)
■ = #4 REBAR-BAUGHMAN CAP (SET)
(M) = MEASURED
(D) = DESCRIBED

B.M. – City Disc 45' W. & 48' N. of the S.W. Cor., S.E. 1/4, Sec 20, T28S, R1E
Elev. = 81.36 City Datum
= 1268.76 M.S.L.

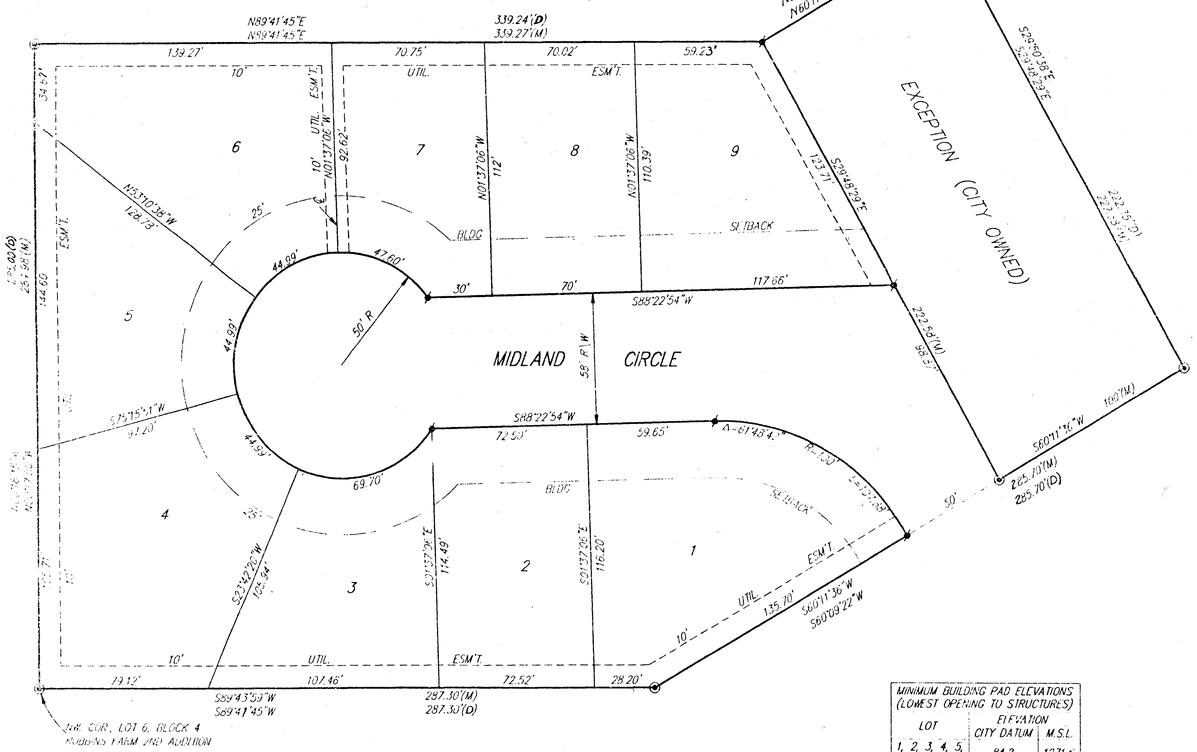

MINIMUM BUILDING PAD ELEVATIONS (LOWEST OPENING TO STRUCTURES)		
LOT	ELEVATION CITY DATUM	M.S.L.
1, 2, 3, 4, 5, 6, 7, 8, 9	84.2	1271.6

State of Kansas)
Sedgwick County) SS We, Baughman Company, P.A., Surveyors in aforesaid County and State do hereby certify that we have surveyed and platted "ROBBINS FARM 4TH ADDITION", to Wichita, Sedgwick County, Kansas and that the accompanying plat is a true and correct exhibit of the property surveyed, described as commencing at a point on the north line of the SE 1/4 of Sec. 20, Twp. 28-S, R-1-E, 6th P.M, Sedgwick County, Kansas, said point being 618.64 feet more or less east of the NW Corner thereof and on the east line o. the Midland Valley Railroad (Abandoned per District Court Case #C-19427), thence, S29°50'38"E along the east line of the abandoned Midland Valley Railrood for a distance of 940.95 feet for a point of beginning; thence continuing S29°50'38"E along the east line of the abandoned Midland Valley Railroad for a distance of 222.35 feet to the NE Corner ROBBINS FARM 2ND ADDITION; thence, S60°09'22"W along the north line of ROBBINS FARM 2ND ADDITION for a distance of 285.70 feet; thence, S89°41'45"W along the north line of ROBBINS FARM 2ND ADDITION for a distance of 287.30 feet to the NW Corner of Lot 6, Block 4, ROBBINS FARM 2ND ADDITION said point also being a point on the east line of ROBBINS FARM 3RD ADDITION; thence, N00°18'15"W along the east line of ROBBINS FARM 3RD ADDITION for a distance of 285.00 feet to the NE Corner of ROBBINS FARM 3RD ADDITION; thence N89°41'45"E along the north line of ROBBINS FARM 3RD ADDITION extended to the east for a distance of 339.24 feet to the west line of the abandoned Midland Valley Railroad; thence, N60°09'22"E for a distance of 100.00 feet to the point of beginning, except that part owned by the City of Wichita, Kansas.

All being situated in the SE 1/4 of Sec. 20, Twp. 28-S, R-1-E of the 6th P.M., Sedgwick County, Kansas.

Baughman Company, P.A.

Gregory F. Severns — 6-27-95 — Surveyor
GREGORY F. SEVERNS, LS-876, KANSAS, LAND SURVEYOR

Know all men by these presents that we, the undersigned, have caused the land in the surveyors certificate to be platted into Lots and a Street to be known as "ROBBINS FARM 4TH ADDITION", Wichita, Sedgwick County, Kansas. The utility easements are hereby granted as indicated for the construction and maintenance of all public utilities. The streets are hereby dedicated to and for the use of the public. Minimum Pad Elevations for the lowest opening to the structures shall be as shown on the face of the plat.

Investors Group, Inc.

Paul E. Kelsey — President
Paul E. Kelsey

State of Kansas)
Sedgwick County) SS The foregoing instrument acknowledged before me, this 19th day of JUNE, 1995, by Paul E. Kelsey, President of Investors Group, Inc., on behalf of the corporation.

Philip J. Meyer — Notary Public
PHILIP J. METER

My App't. Exp. 9/5/97

We, State Bank of Colwich, holders of a mortgage on the above described property do hereby consent to this plat of "ROBBINS FARM 4TH ADDITION", Wichita, Sedgwick County, Kansas.

State Bank of Colwich
Gene M. Suellentrop — Vice President
GENE M. SUELLENTROP (Vice President)

State of Kansas)
Sedgwick County) SS The foregoing instrument acknowledged before me, this 19th day of June, 1995, by Gene M. Suellentrop, Vice President of State Bank of Colwich, on behalf of the bank.

Viviane Mandolani — Notary Public
VIVIANE MANDOLANI

My App't. Exp. 6/5/99

VIVIANE MANDOLANI
NOTARY PUBLIC
STATE OF KANSAS
My Appt. Exp. 6/5/99

This plat of "ROBBINS FARM 4TH ADDITION", to Wichita, Sedgwick County, Kansas has been submitted to and approved by the Wichita-Sedgwick County Metropolitan Area Planning Commission, Wichita, Kansas.
Dated this 11th day of August, 1995
Wichita-Sedgwick County Metropolitan Area Planning Commission

James D. Miner — Chairman
Marvin S. Kraut — Secretary

This plat approved and all dedications shown hereon accepted by the City Council of the City of Wichita, Kansas, this 11th day of JULY, 1995.

Bob Knight — Mayor
Pat Burnett — DEPUTY City Clerk

Entered on transfer record this 14th day of August, 1995.

Susan E. Crockett-Spoon — Deputy County Clerk

#147842

State of Kansas)
Sedgwick County) SS This is to certify that this plat has been filed for record in the office of the Register of Deeds, this 14th day of AUGUST, 1995, at 3:30 o'clock P.M; and is duly recorded.

Pat Kettler — Register of Deeds
Ed Reso — Deputy

20.00

18-8-5-10