# CONSTRUCTION PLANS

SANITARY SEWER EXTENSIONS

## ABERDEEN 2ND ADDITION-PHASE II

TO

# THE CITY OF WICHITA, KANSAS

## LATERAL 370, SOUTHWEST INTERCEPTOR SEWER

MICHAEL E. LINDEBAK, P.E. – CITY ENGINEER
PROJECT NO. 468-82625
INDEX CODE 743682

## INDEX


| | |
|---|---|
| TITLE SHEET | SHEET 1 |
| LINE NO. 1 | SHEET 2 |
| LINE NO. 1A & 2 | SHEET 3 |
| LINE NO. 2, 2B & 2C | SHEET 4 |
| LINE NO. 3 | SHEET 5 |
| LINE NO. 2A, 3A & 4 | SHEET 6 |
| TYPE "P" MANHOLE | SHEET 7 |
| SHALLOW MANHOLE TYPE "P" | SHEET 8 |
| SPECIAL SHALLOW MANHOLE TYPE "A" & "B" | SHEET 9 |
| COORDINATE POINTS LIST | SHEET 10 |
| EASEMENT GRADING PLAN | SHEET 11 |
| ABERDEEN 2ND ADDITION PLAT | SHEET 12 |


Sheets 5 & 6 Revised

## GENERAL NOTES:

1. Existing utility lines and their location, as shown on the plans, represent the best information obtainable for design. The contractor will be required to work around existing utilities within the right-of-way which do not conflict with proposed construction.

2. Rubble from the removal of miscellaneous structures and excess excavation which is to be wasted shall be the disposed of on sites to be provided by the Contractor. These sites shall be approved by the Engineer as to suitability, appearance and site location. Locations that, in the opinion of the Engineer, will leave an unsightly appearance will not be approved.

   All disposal sites must be approved by the Kansas Department of Health and Environment. Material either stockpiled or disposed of in a flood plain would require a Kansas State Board of Agriculture permit. Any material dumped in waters of the United States or wetlands is subject to U.S. Corps. of Engineers permitting regulations. Any material buried or stockpiled beyond approved construction limits would require additional archaeological investigations unless buried in a previously approved borrow location.

3. The Contractor shall be responsible for maintaining continuous flow of sewage through construction. Contractor's proposed method for maintaining sewage flow shall be approved by the Engineer. Cost of maintaining flow of sewage through construction will not be paid for directly and this cost shall be considered as subsidiary to the other pay items of the work.

4. The Contractor shall be responsible for preserving property irons. The Contractor will be required to re-establish any property irons which are damaged or destroyed by his construction operations. Such irons shall be re-established by a licensed land surveyor in accordance with state laws.

5. Trees and shrubs in public right-of-way which are in direct conflict with proposed new construction shall be removed by the Contractor with the Engineer's approval. Trees and shrubs which are not in direct conflict with the proposed new construction shall be saved and protected from damage.

6. Contractor shall vacuum test all manholes according to the City of Wichita standard specifications.

7. Provide temporary rye grass seeding on all disturbed areas at 200 lbs./acre. Prepare ground before seeding per City Specifications.

8. Trees are to be removed as needed. The cost is subsidiary to Sewer Construction Costs.

9. All structures lying within the Utility Easements where sewer lines are to be constructed shall be removed prior to the installation of sewer improvements within that area.

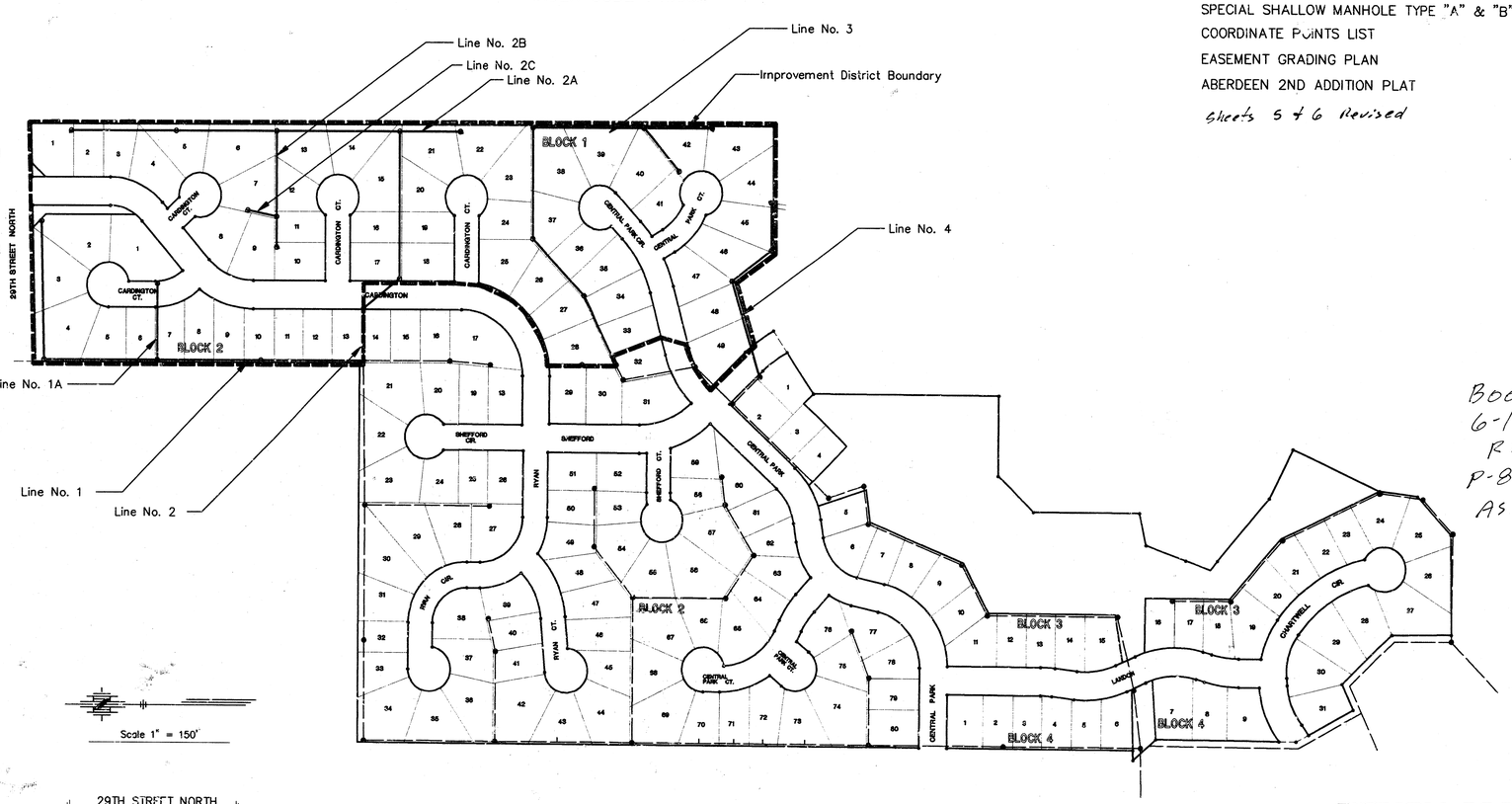


Scale 1" = 150'

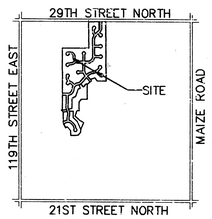


LOCATION MAP
No Scale

Booked
6-15-99
RDL
P-83, P-84
AS BUILT

## BENCH MARKS

1. City of Wichita Benchmark disc, 67' south of centerline 21st St. & 79' south of section line, and 46' east of centerline 119th St.
   Elev. 172.08

2. 80d nail in power pole, 30' east and 50' south of Northwest Corner of Government Lot 6 in SW Quarter of Section 6, T27S, R1W.
   Elev. 172.08

3. 80d nail in power pole 50' south of NE corner of Government Lot 3 in NW Quarter of Section 6, T27S R1W.
   Elev. 179.98

4. 80d nail in powor pole 40' west and 40' north of the NW Corner of the NW Corner of Sec. 6, T27S, R1W.
   Elev. 175.05

OCTOBER 1998

PLANS PREPARED
BY
POE & ASSOCIATES OF KANSAS, INC.
CONSULTING ENGINEERS
5940 E. Central, Suite 200 ■ Wichita KS 67208 ■ 316/685-4114 ■ Fax 316/685-4444

JAMES M. UBERT
LICENSED
14698
KANSAS
PROFESSIONAL ENGINEER
10-2-98



F:\APPS\2CAD\6541\Base.dwg Fri Oct 02 14:51:29 1998 James M. Ubert, Poe & Associates of Kansas, Inc.

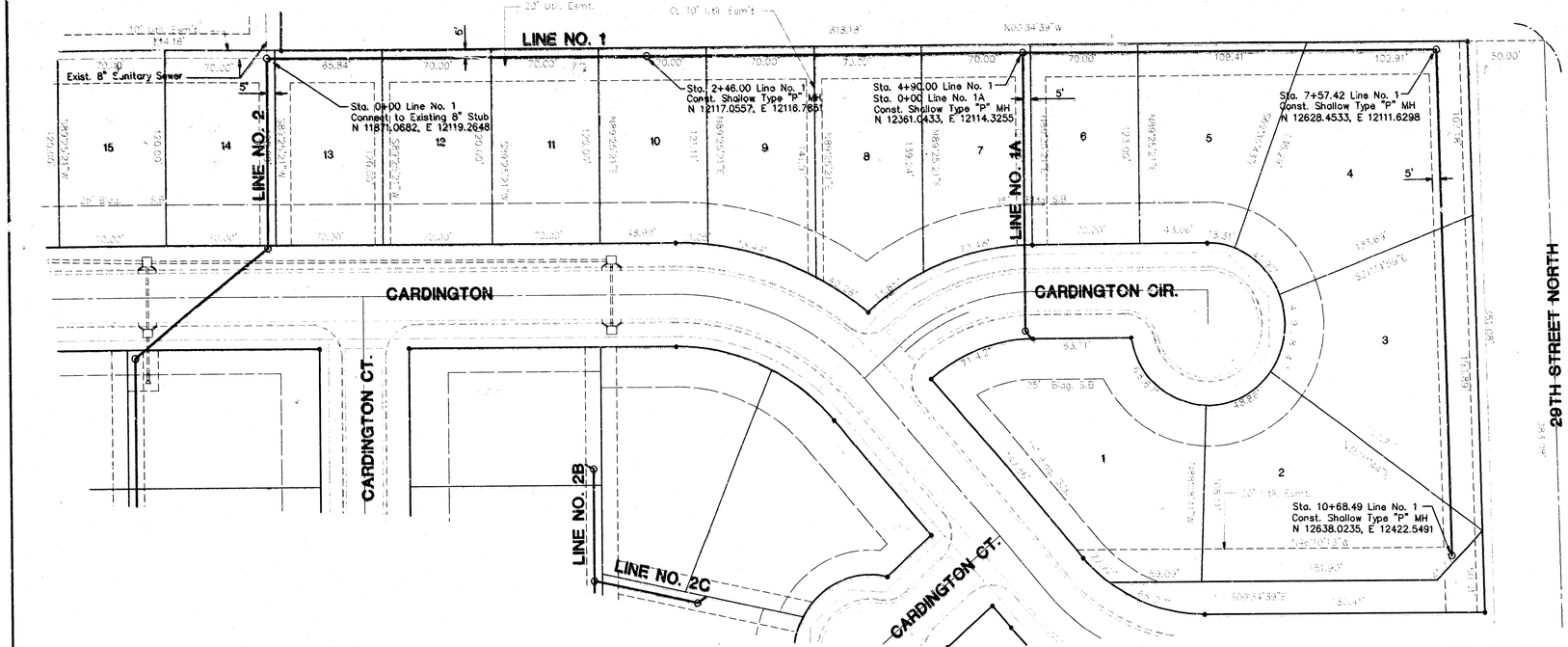


GRAPHIC SCALE

5 0 1 INCH = 5 FT. (Vert.)

40 0 20 40 80 (IN FEET) 1 INCH = 40 FT.




| No. | Date | By | Approved | Revision |
|---|---|---|---|---|
| | | | | |

ABERDEEN 2ND ADDITION-PHASE II
SANITARY SEWER LINE NO.1
LATERAL 370, SOUTHWEST INTERCEPTOR SEWER
CITY OF WICHITA, KANSAS
MICHAEL E. LINDEBAK, P.E. - CITY ENGINEER
C.O.W. Project No. 468-82525 Index Code 743682

POE & ASSOCIATES OF KANSAS, INC.
CONSULTING ENGINEERS
9940 E. Central, Suite 200 ■ Wichita, KS 67206 ■ 316/685-4114 ■ Fax 316/682-4444

FINAL

Engineer: J. Ubert
Drawn By: S. Schmidt
Poe Job No.: 1654
Date: October 1998

Sheet 2 of 12

F:\WPFS\OCA\P\654\Base.dwg Fri Oct 02 14:25:52 1998 James M. Ubert, Poe & Associates of Kansas, Inc.

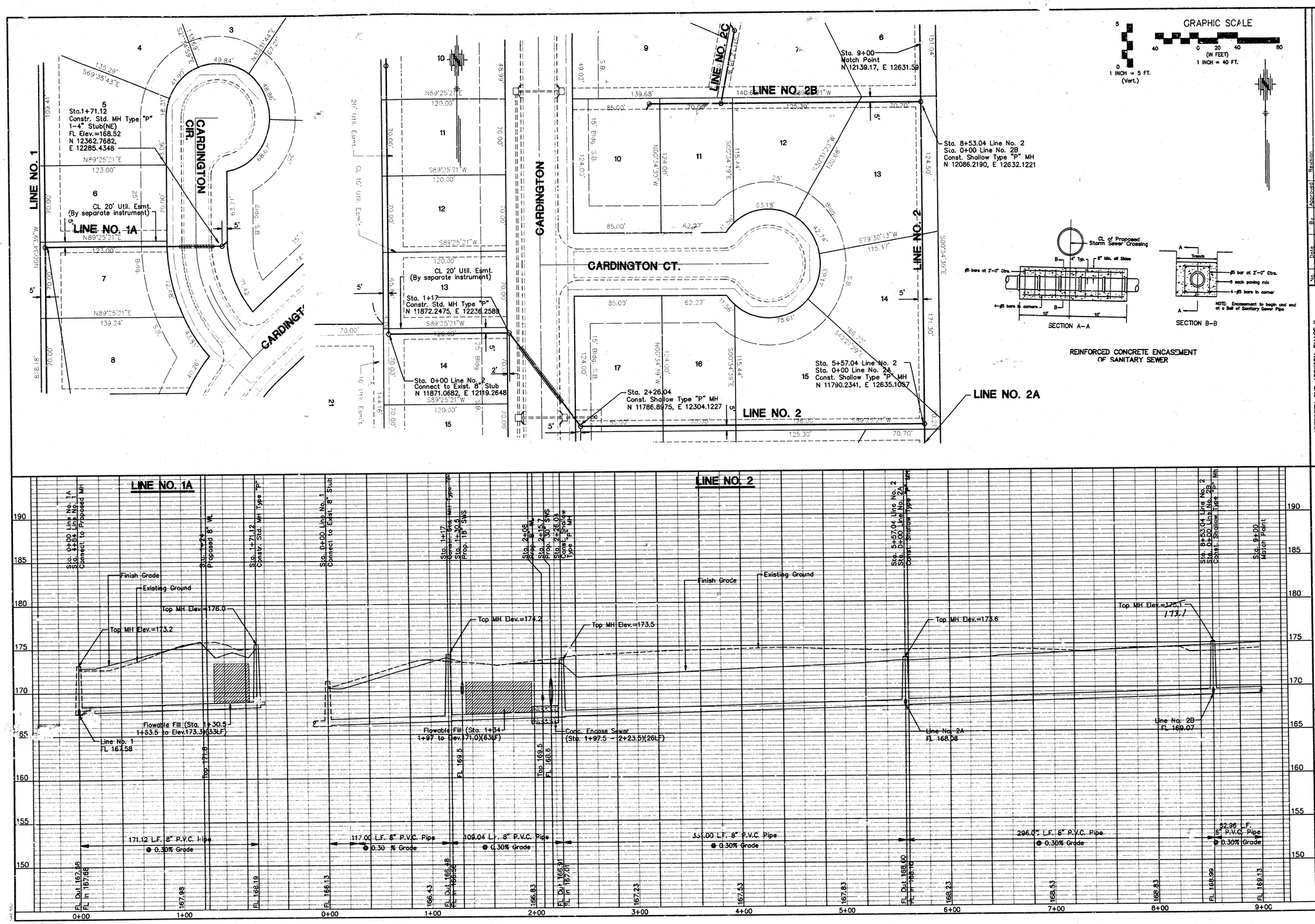


ABERDEEN 2ND ADDITION-PHASE II
SANITARY SEWER LINE NO.1A & 2
LATERAL 370, SOUTHWEST INTECEPTOR SEWER
CITY OF WICHITA, KANSAS
MICHAEL E. LINDEBAK, P.E. - CITY ENGINEER
C.O.W. Project No. 468-82625 Index Code 743682

POE & ASSOCIATES OF KANSAS, INC.
CONSULTING ENGINEERS
5940 E. Central, Suite 200 ■ Wichita KS 67208 ■ 316/685-4114 ■ Fax 316/685-4444

FINAL

Engineer: J. Ubert
Drawn By: S. Schmidt
Poe Job No.: 1654
Date: October 1998

Sheet 3 of 12

F:\APPS\DCA\P\654\Base.dwg Fri Oct 02 14:29:00 1998 James M. Ubert, Poe & Associates of Kansas, Inc.

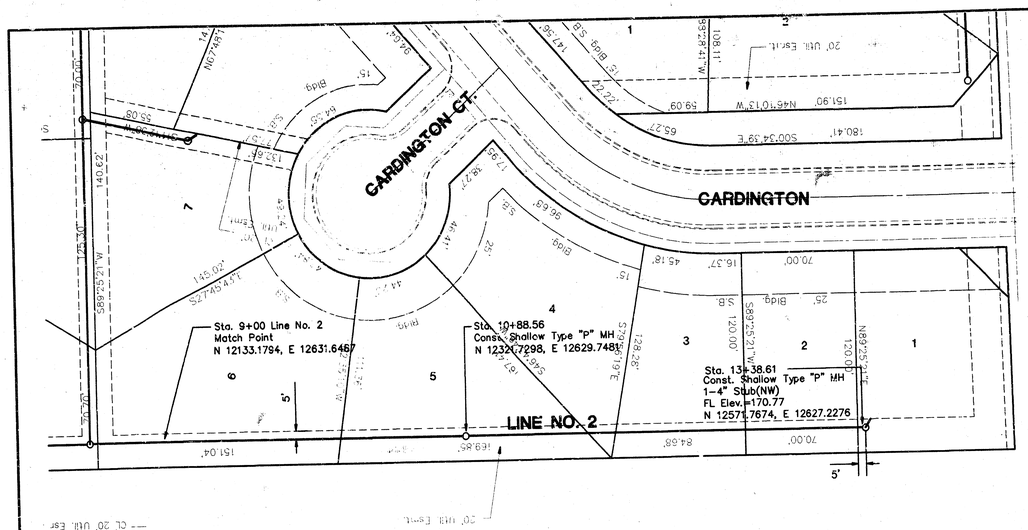


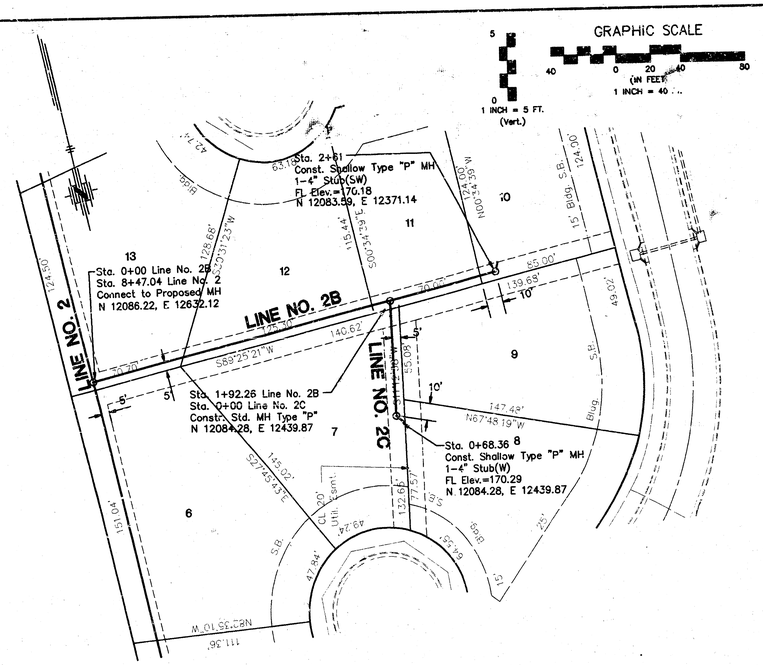


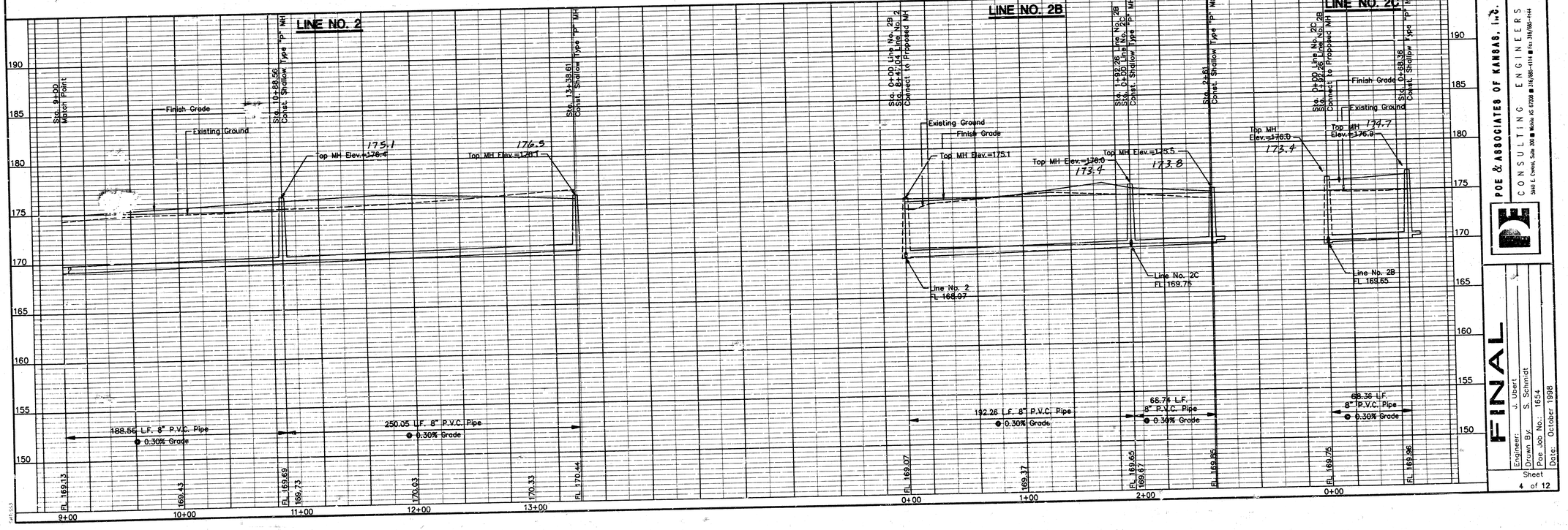


ABERDEEN 2ND ADDITION-PHASE II
SANITARY SEWER LINE NO. 2, 2B & 2C
LATERAL 370, SOUTHWEST INTERCEPTOR SEWER
CITY OF WICHITA, KANSAS
MICHAEL E. LINDEBAK, P.E. - CITY ENGINEER
C.O.W. Project No. 468-82825 Index Code 743662

| No. | Date | By | Approved | Revision |
|---|---|---|---|---|
| | | | | |

POE & ASSOCIATES OF KANSAS, Inc.
CONSULTING ENGINEERS
3840 E. Central, Suite 200 ■ Wichita, KS 67208 ■ 316/686-4116 ■ Fax 316/686-7444

FINAL

Engineer: J. Ubert
Drawn By: S. Schmidt
Poe Job No.: 1654
Date: October 1998

Sheet 4 of 12

F:\APPS\OCAP\654\Base.dwg Fri Oct 02 14:32:14 1998 James N. Ubert, Poe & Associates of Kansas, Inc.

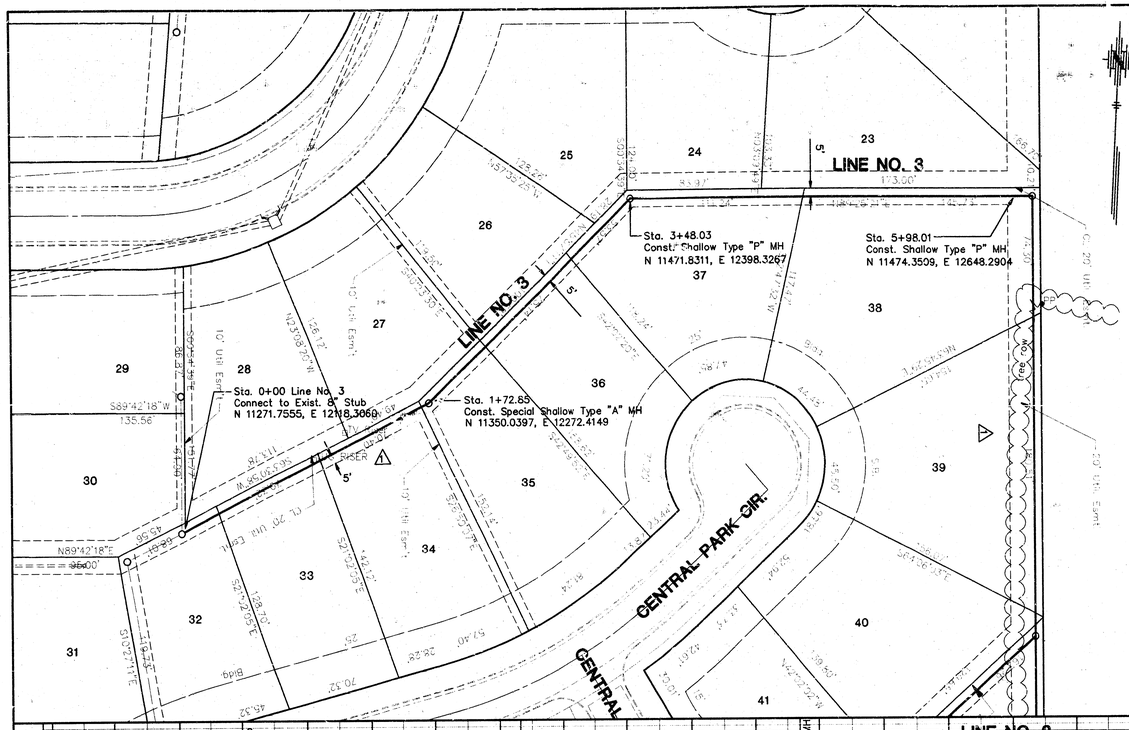


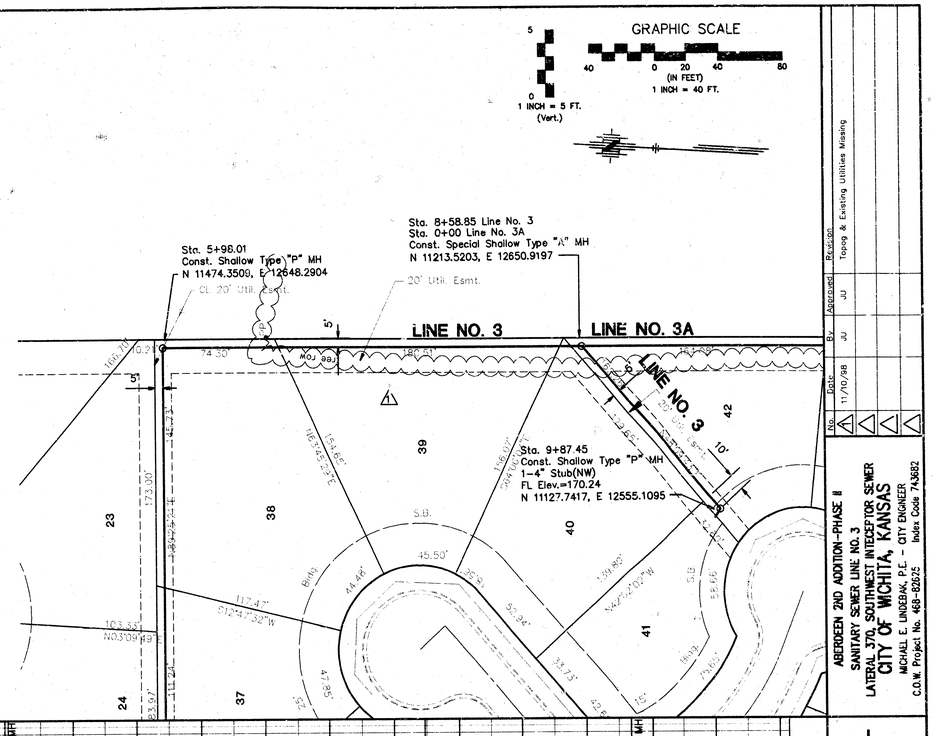


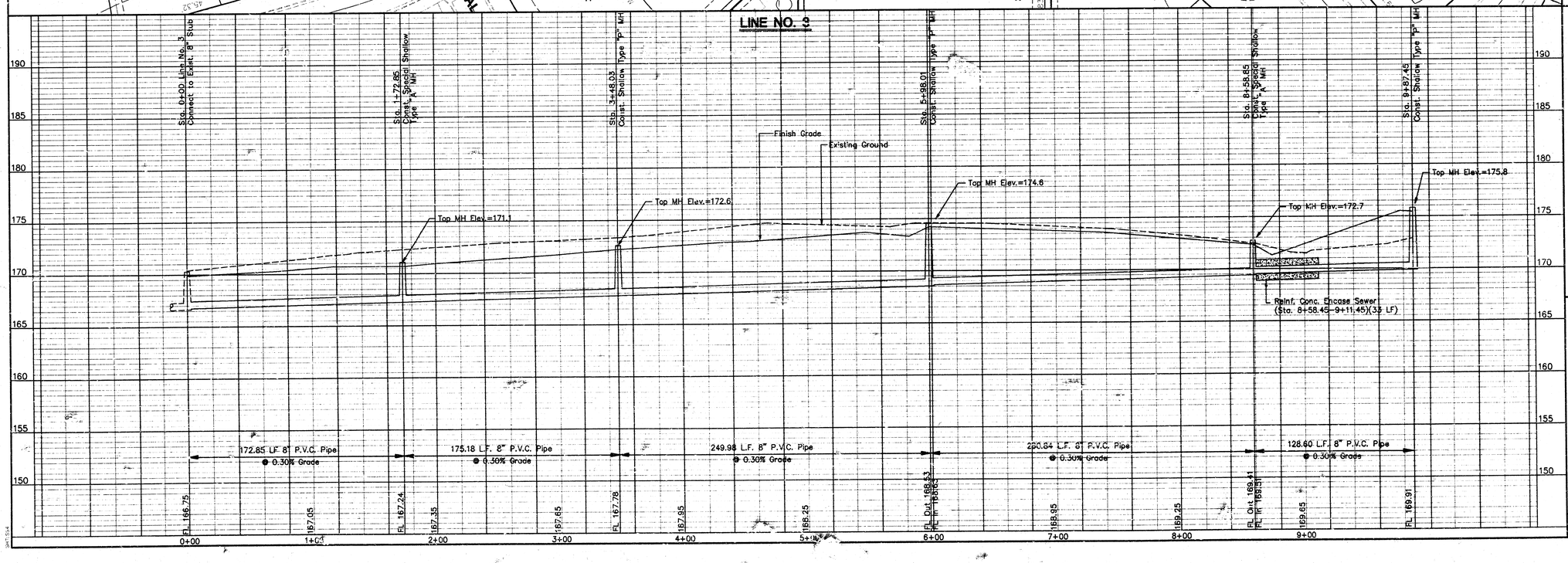


GRAPHIC SCALE

5 0 — 1 INCH = 5 FT. (Vert.)

40 0 20 40 80 — (IN FEET) 1 INCH = 40 FT.

| No. | Date | By | Approved | Revision |
|---|---|---|---|---|
| | 11/10/98 | JU | JU | Topog & Existing Utilities Missing |

ABERDEEN 2ND ADDITION-PHASE II
SANITARY SEWER LINE NO. 3
LATERAL J70, SOUTHWEST INTERCEPTOR SEWER
CITY OF WICHITA, KANSAS
MICHAEL E. LINDEBAK, P.E. – CITY ENGINEER
C.O.W. Project No. 468-82625 Index Code 743682

POE & ASSOCIATES OF KANSAS, INC.
CONSULTING ENGINEERS
3640 E. Central, Suite 200 ■ Wichita, KS 67208 ■ 316/685-4114 ■ Fax: 316/685-4444

FINAL

Engineer: J. Ubert
Drawn By: S. Schmidt
Poe Job No.: 1654
Date: October 1998

Sheet 5 of 12

F:\APPS\JOE\JP\654\base.dwg Tue Nov 10 12:49:06 1998 James M. Ubert, Poe & Associates of Kansas, Inc.

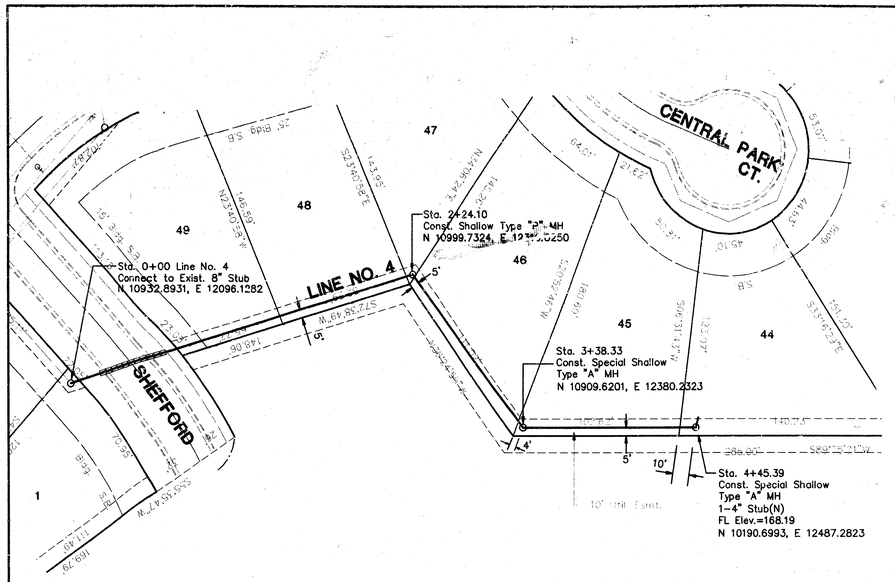


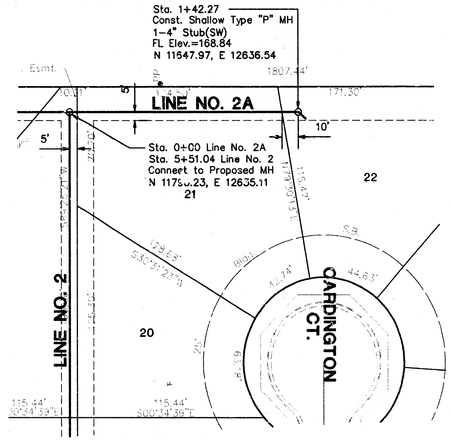


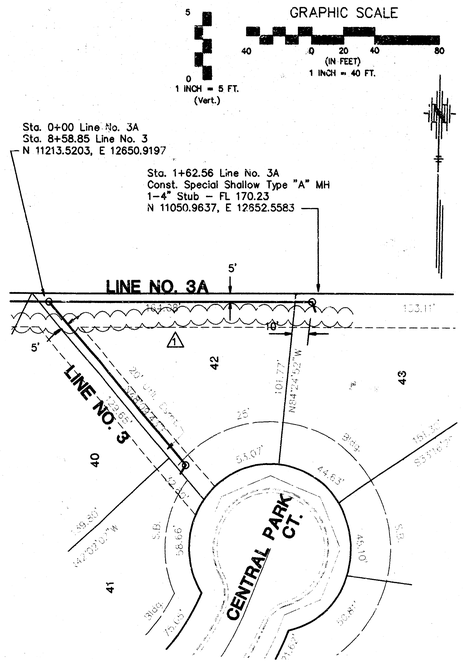


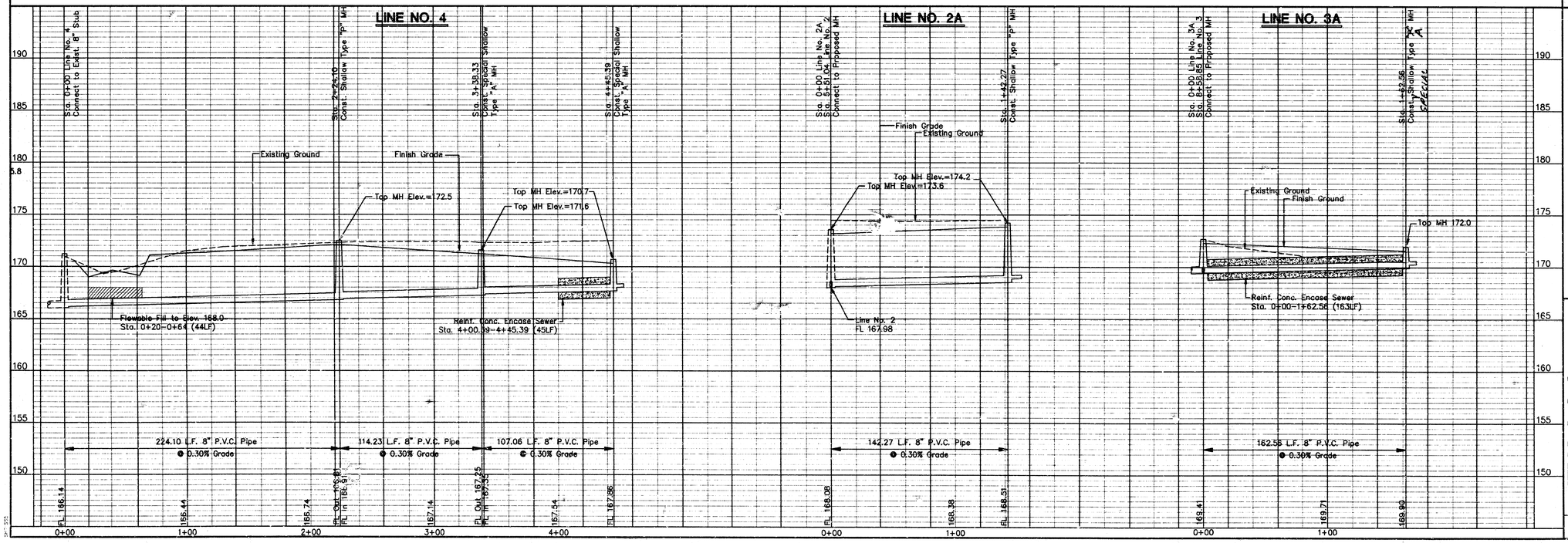


| No. | Date | By | Approved | Revision |
|---|---|---|---|---|
| 1 | 11/10/98 | JU | JU | Topog & Existing Utilities Missing |

ABERDEEN 2ND ADDITION-PHASE II
SANITARY SEWER LINE NO. 2A, 3A & 4
LATERAL 370, SOUTHWEST INTERCEPTOR SEWER
CITY OF WICHITA, KANSAS
MICHAEL E. LINDEBAK, P.E. – CITY ENGINEER
C.O.W. Project No. 468-82625 Index Code 743682

POE & ASSOCIATES OF KANSAS, INC.
CONSULTING ENGINEERS
9440 E. Central, Suite 200 ■ Wichita, KS 67208 ■ 316/685-4114 ■ Fax 316/685-4144

FINAL

Engineer: J. Ubert
Drawn By: S. Schmidt
Poe Job No.: 1654
Date: October 1998

Sheet
6 of 12

F:\APPS\DATA\P\654\Base.dwg Tue Nov 10 12:53:05 1998 James M. Ubert, Poe & Associates of Kansas, Inc.

# SEWER APPURTENANCES DETAILS

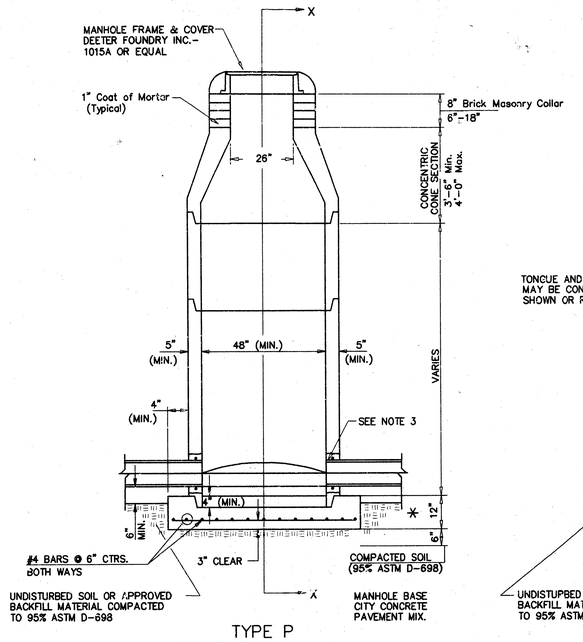


TYPE P
STANDARD MANHOLE

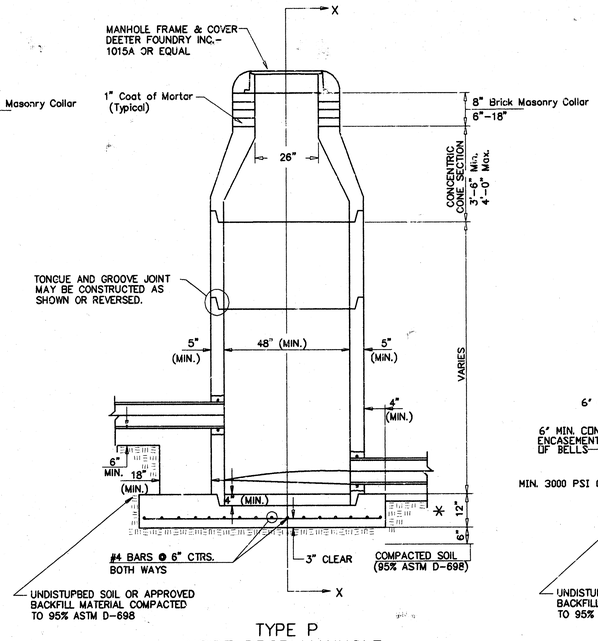


TYPE P
INSIDE DROP MANHOLE

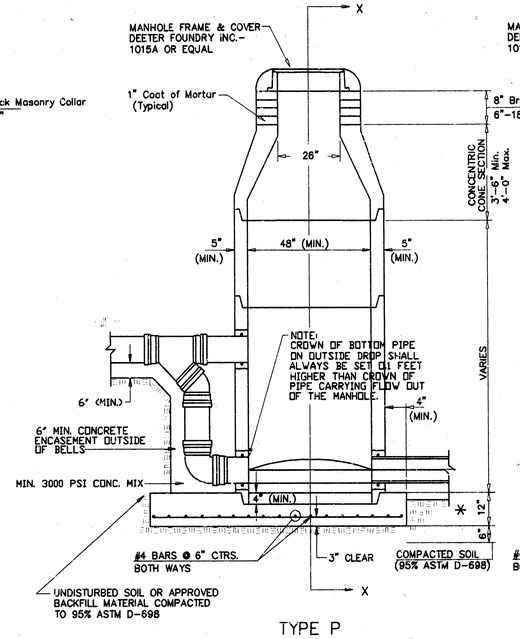


TYPE P
OUTSIDE DROP MANHOLE

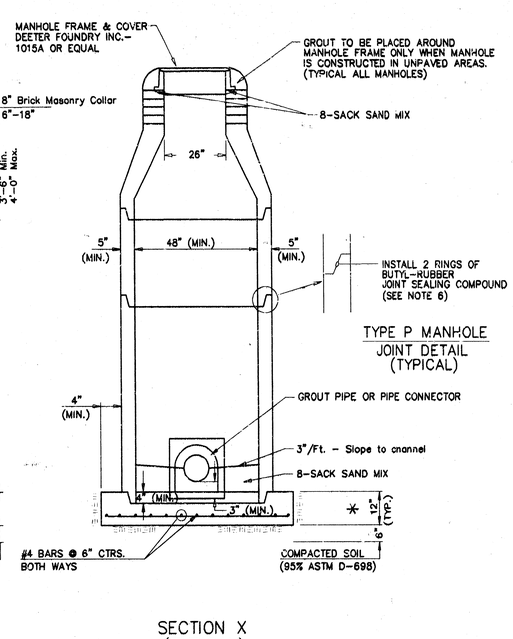


SECTION X
(TYPICAL)

GENERAL NOTES

PRECAST MANHOLE NOTES

1. ALL PRECAST CONCRETE MANHOLE SECTIONS SHALL CONFORM TO THE LATEST REVISIONS OF A.S.T.M. C478 AS MODIFIED BY THE SPECIFICATIONS.
2. NON–SHRINK GROUT SHALL BE NON–METALLIC TYPE.
3. APPROVED FLEXIBLE WATERSTOP GASKETS SHALL BE INSTALLED TO JOIN THE SEWER TO THE MANHOLE WALL WHEN A.B.S. COMPOSITE PIPE OR P.V.C. PIPE IS USED. FOR OTHER TYPES OF PIPE THE SEWER SHALL BE GROUTED IN PLACE WITH NON–SHRINK GROUT. THE SEWER PIPE SHALL BE SUPPORTED WITH CONCRETE ENCASEMENT A MINIMUM OF 3 FEET FROM THE MANHOLE WALL AND TO THE FIRST JOINT FOR V.C.P. SUCH THAT THE JOINT REMAINS FLEXIBLE.
4. ALL INSIDE SURFACES OF THE CONCRETE MANHOLE WHICH WOULD BE EXPOSED TO SEWER GAS SHALL BE COATED WITH 2 COATS TNEMEC SERIES 66 HI–BUILD EPOXOLINE, DRY THICKNESS OF 8 MILS (MIN.)
5. EXTERIOR MANHOLE WALLS SHALL BE COATED WITH 1 COAT MOBILARMA 633 BITUMINOUS COATING.
6. JOINT SEALING COMPOUND SHALL BE KENT SEAL NO. 2 OR APPROVED EQUAL.
7. PRECAST MANHOLES SHALL BE SET AT LEAST 4 INCHES INTO THE MANHOLE BASE.
8. TOP OF MANHOLE FLOOR SLAB SHALL BE AT LEAST 3 INCHES BELOW THE FLOW LINE OF THE OUTLET PIPE TO INSURE SUFFICIENT MINIMUM THICKNESS OF SHAPED INVERT.
9. LIFTING HOLES SHALL BE FILLED WITH NON–SHRINK GROUT AND THE INTERIOR SURFACE COATED AS SPECIFIED.
10. MORTAR USED IN MASONRY CONSTRUCTION SHALL CONTAIN 8 SACKS OF CEMENT PER CUBIC YARD. CONCRETE USED IN MANHOLE BASES SHALL CONFORM TO THE REQUIREMENTS OF CONCRETE FOR CONCRETE PAVEMENT CONSTRUCTION AS SPECIFIED IN THE CITY STANDARD PAVING SPECIFICATIONS USING CITY CONCRETE PAVEMENT MIX WITHOUT AIR ENTRAINING ADMIXTURE. MORTAR SHALL BE PLACED AROUND THE MANHOLE RING AS SHOWN ON THE DRAWINGS WHEN MANHOLES ARE CONSTRUCTED IN UNPAVED AREAS. MANHOLES CONSTRUCTED WHERE PIPE SIZES ARE SMALLER THAN 24" SHALL HAVE AN INSIDE DIAMETER OF 4'. MANHOLES CONSTRUCTED WHERE PIPE SIZES ARE 24" OR LARGER SHALL HAVE AN INSIDE DIAMETER OF 5'. COMPLETED MANHOLE SHALL BE WITHOUT LEAKS AND WATER TIGHT.
11. REINFORCING STEEL SHALL BE INSTALLED IN THE MANHOLE BASES AND SHALL CONSIST OF NO. 4 BARS PLACED ON 6" CENTERS IN BOTH DIRECTIONS. THE MANHOLE BASE REINFORCEMENT SHALL BE PLACED AT LEAST 3" ABOVE THE BOTTOM OF THE MANHOLE BASE. ALL COSTS FOR FURNISHING AND INSTALLING REINFORCING STEEL SHALL BE INCLUDED IN THE UNIT PRICE BID FOR THE MANHOLE.
12. OPENINGS SHALL BE CUT INTO THE MANHOLE WALL WHEN OUTSIDE DROPS ARE CONSTRUCTED ON EXISTING MANHOLES. SUCH OPENINGS CUT INTO EXISTING MANHOLES SHALL BE AS SMALL AS PRACTICAL TO FACILITATE INSTALLING AND GROUTING THE NEW PIPE IN PLACE. WATERSTOP GASKETS SHALL BE USED WITH P.V.C. AND A.B.S. COMPOSITE PIPE. THE NEW PIPE SHALL BE GROUTED INTO THE OPENING USING AN APPROVED NONSHRINK GROUT FOR THE FULL MANHOLE WALL THICKNESS. THE EXTERIOR OF THE COMPLETED CONNECTION SHALL BE SEALED WITH AN APPROVED BITUMINOUS COATING SUCH THAT THE CONNECTION WILL BE WATER TIGHT. FLOOR OF MANHOLE SHALL BE MODIFIED TO FORM NEW FLOW CHANNEL FOR THE NEW CONNECTION AS INDICATED BY THE DRAWING. THIS WORK, INCLUDING MODIFICATION OF MANHOLE FLOOR, SHALL BE PAID FOR AT THE UNIT PRICE BID FOR OUTSIDE DROP STACK CONSTRUCTED ON EXISTING MANHOLE.
13. THE FLOORS OF ALL MANHOLES SHALL BE SHAPED WITH FLOW CHANNELS SUCH THA, THE MANHOLES WILL BE SELF CLEANING AND FREE OF AREAS WHERE SOLIDS COULD BE DEPOSITED AS SEWAGE FLOWS THROUGH THE MANHOLE FROM ALL INLET PIPES TO THE OUTLET PIPE. FLOW CHANNELS SHALL BE FORMED TO MATCH THE BOTTOM HALVES OF THE INFLOWING PIPES AND THE OUTFLOWING PIPE AS SHOWN BY THE DRAWINGS EXCEPT FOR INSIDE DROP MANHOLES. FLOW CHANNELS FOR INSIDE DROP MANHOLES SHALL BE CONSTRUCTED AS INDICATED BY THE DRAWING. MANHOLE FLOORS SHALL HAVE SLOPES OF 3 INCHES PER FOOT IN THE AREAS OUTSIDE OF THE FLOW CHANNELS SLOPED TOWARD THE FLOW CHANNELS. PIPES LAID THROUGH MANHOLES SHALL HAVE THE TOP HALF REMOVED TO NEAT LINES FOR THE FULL INSIDE DIAMETER OF THE MANHOLE. MANHOLE FLOORS SHALL THEN BE SHAPED AROUND THE BOTTOM HALF OF THE PIPE WHICH FORMS THE FLOW CHANNEL.
14. PIPES INSTALLED WITHIN THE EXCAVATION MADE FOR THE MANHOLE SHALL BE CRADLED WITH CONCRETE TO THE LIMITS OF THE MANHOLE EXCAVATION. WHEN CLAY PIPE IS USED, THE CRADLE SHALL EXTEND TO THE FIRST JOINT OUTSIDE THE MANHOLE. THE CRADLE SHALL BE TERMINATED AT THE CLAY PIPE JOINT IN A MANNER WHICH WILL MAINTAIN THE FLEXIBILITY OF THE JOINT. COST OF CRADLE WITHIN MANHOLE EXCAVATION OR TO CLAY PIPE JOINTS ADJACENT TO MANHOLE SHALL BE INCLUDED IN THE UNIT PRICE BID FOR THE MANHOLE.
15. MANHOLE COVER CASTINGS AND MANHOLE FRAME CASTINGS SHALL CONFORM TO THE REQUIREMENTS AS INDICATED IN THE STANDARD SPECIFICATIONS AND AS SHOWN IN THE STANDARD DETAIL DRAWING.
16. THE VERTICAL DROP IN INSIDE DROP MANHOLES SHALL NOT EXCEED 2' FOR INFLOWING PIPES SIZED 12" OR SMALLER AND 2' FOR INFLOWING PIPES LARGER THAN 12". THE CROWNS OF INFLOWING PIPES SHALL NEVER BE SET LOWER THAN THE CROWN OF THE OUTFLOWING PIPE.
17. STANDARD MANHOLES AND STANDARD INSIDE DROP MANHOLES SHALL BE BID AS STANDARD MANHOLES FOR THE TYPE AND DIAMETER INDICATED. OUTSIDE DROP MANHOLES SHALL BE BID AS STANDARD OUTSIDE DROP MANHOLES FOR THE TYPE AND DIAMETER INDICATED. ALL MANHOLE DIAMETERS WILL BE 4' UNLESS INDICATED OTHERWISE.
18. A BRICK MASONRY COLLAR SHALL BE INSTALLED BETWEEN THE CAST IRON FRAME AND THE CONCENTRIC CONE. THE COLLAR WILL HAVE 8" WALLS AND A VERTICAL HEIGHT OF 6" MINIMUM AND 18" MAXIMUM. A 1" COAT OF MORTAR WILL BE PLASTERED ON THE OUTSIDE OF THE COLLAR. THE USE OF PRE–CAST CONCRETE SPACERS FOR MANHOLE TOP ADJUSTMENT IS ALSO ALLOWED.

* 19. ALL MANHOLE BASE CONSTRUCTION THAT OCCURS IN THE FIELD MUST HAVE A MINIMUM OF EIGHT INCHES OF CONCRETE BELOW THE MANHOLE WALL AND THE WALL SECTION SHOULD EXTEND FOUR INCHES INTO THE BASE RESULTING IN A MINIMUM TOTAL BASE THICKNESS OF 12 INCHES. MONOLITHIC BASE SECTIONS CONSTRUCTED IN THE FACTORY AND CURED AS PER ASTM C478 MUST HAVE A MINIMUM EIGHT INCH THICK CONCRETE BASE. BASE SECTIONS CONSTRUCTED IN THE FACTORY UTILIZING A PREVIOUSLY MANUFACTURED MANHOLE WALL SECTION, AS OUTLINED IN THE ABOVE PARAGRAPH, MUST HAVE A MINIMUM BASE THICKNESS OF EIGHT INCHES WITH THE WALL SECTION EXTENDING FOUR INCHES INTO THE BASE AND BE MANUFACTURED IN COMPLIANCE WITH ASTM C478.

| No. | Date | By | Approved | Revision |
|---|---|---|---|---|
| | | | | |

ABERDEEN 2ND ADDITION–PHASE II
TYPE "P" MANHOLE DETAIL
LATERAL 370, SOUTHWEST INTERCEPTOR SEWER
CITY OF WICHITA, KANSAS
MICHAEL E. LANDEEN, P.E. – CITY ENGINEER
C.O.W. Project No. 468–82525 Index Code 743622


POE & ASSOCIATES OF KANSAS, INC.
CONSULTING ENGINEERS
Suite C, Cordova, Suite 300 ■ Wichita, KS 67206 ■ 316/682–4114 ■ fax 316/682–4444


FINAL

Engineer: J. Ubert
Drawn By: S. Schmidt
Poe Job No.: 1654
Date: October 1998




F:\APPS\DCA\P\1654\Base.dwg Fri Oct 02 15:02:53 1998 Janeen M. Ubert, Poe & Associates of Kansas, Inc.

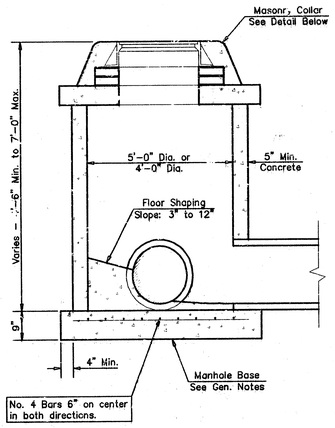


SHALLOW TYPE "P" MANHOLE

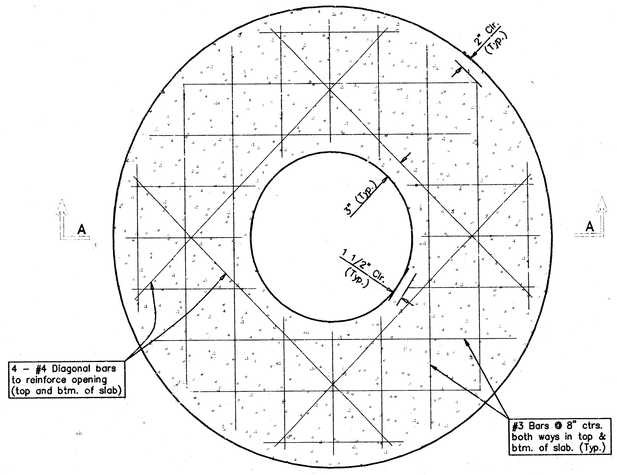


PLAN

## GENERAL NOTES

1. Mortar used in masonry construction shall contain 8 sacks of cement per cubic yard. Concrete used in manhole bases shall conform to the requirements of concrete for concrete pavemsnt construction as specified in the city standard paving specifications using city concrete cement mix without air entraining admixture. Mortar shall be placed around the manhole ring as shown on the drawings when manholes are constructed in unpaved areas. Manholes constructed where pipe sizes are smaller than 24" shall have an inside diameter of 4'. Manholes constructed where pipe sizes are 24" or larger shall have an inside diameter of 5'. Completed mannole shall be without leaks and water tight.
2. Reinforcing steel shall be installed in the manhole bases and shall consist of no. 4 bars placed on 6" centers in both directions. The manhole base reinforcement shall be placed 6" above the bottom of the manhole base. All costs for furnishing and installing reinforcing steel shall be included in the unit price bid for the manhole.
3. The floors of all manholes shall be shaped with flow channels such that the manholes will be self cleaning and free of areas where solids could be deposited as sewage flows through the manhole from all inlet pipes to the outlet pipe. Flow channels shall be formed to match the bottom halves of the inflowing pipes and the outflowing pipe as shown by the drawings. Manhole floors shall have slopes of 3 inches per foot in the areas outside of the flow channels sloped toward the flow channels. Pipes laid through manholes shall have the top half removed to neat lines for the full inside diameter of the manhole. Manhole floors shall then be shaped around the bottom half of the pipe which forms the flow channel.
4. Pipes installed within the excavation mode for the manhole shall be cradled with concrete to the limits of the manhole excavation. When clay pipe is used, the cradle shall extend to the first joint outside the manhole. The cradle shall be terminated at the clay pipe joint in a manner which will maintain the flexibility of the joint. Cost of cradle within manhole excavation or to clay pipe joints adjacent to manhole shall be included in the unit price bid for the manhole.
5. Manhole cover castings and manhole frame castings shall conform to the requirements as indicated in the standard specifications and as shown in the standard detail drawings.
6. The crowns of inflowing pipes shall never be set lower than the crown of the outflowing pipe.
7. Standard shallow manholes type "P" and "C" shall be paid for at the unit price bid per each for the type and diameter indicated. All standard shallow manhole diameters will be 4' unless indicated otherwise.
8. All brick used in manhole construction shall meet Grade SW of ASTM C652 or C62-87.

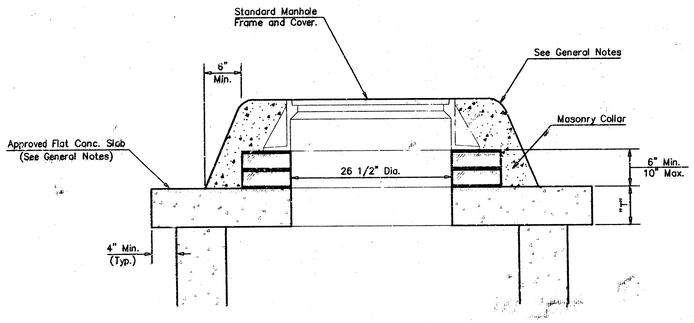


MASONRY COLLAR DETAIL

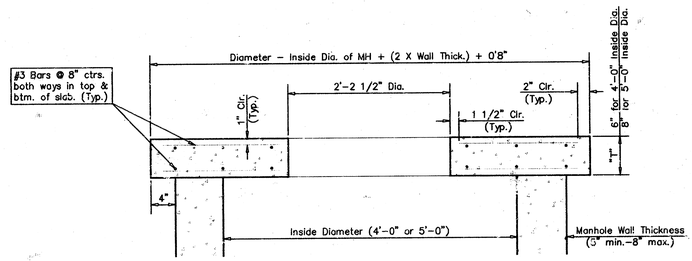


SECTION A–A

FLAT CONCRETE SLAB DETAILS

| No. | Date | By | Approved | Revision |
|---|---|---|---|---|
| | | | | |

ABERDEEN 2ND ADDITION-PHASE II
SHALLOW TYPE "P" MANHOLE DETAIL
LATERAL 370, SOUTHWEST INTERCEPTOR SEWER
CITY OF WICHITA, KANSAS
MICHAEL E. LINDEBAK, P.E. – CITY ENGINEER
C.O.W. Project No. 468-82825 Index Code 743652

POE & ASSOCIATES OF KANSAS, INC.
CONSULTING ENGINEERS
5440 E. Central, Suite 200 ■ Wichita, KS 67208 ■ 316/685-4144 ■ fax 316/685-4444

FINAL

Engineer: J. Ubert
Drawn By: S. Schmidt
Poe Job No.: 1654
Date: October 1998

Sheet
8 of 12

F:\APPS\DCA\P\654\Base.dwg Fri Oct 02 15:00:07 1998 James M. Ubert, Poe & Associates of Kansas, Inc.

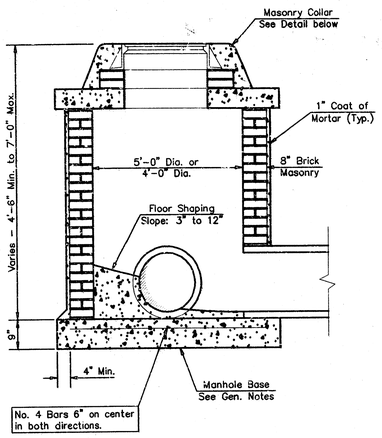


SHALLOW TYPE "A" MANHOLE

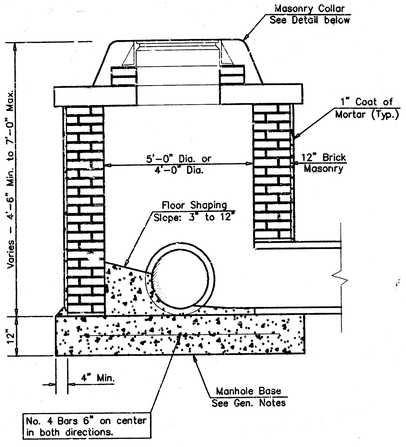


SHALLOW TYPE "B" MANHOLE

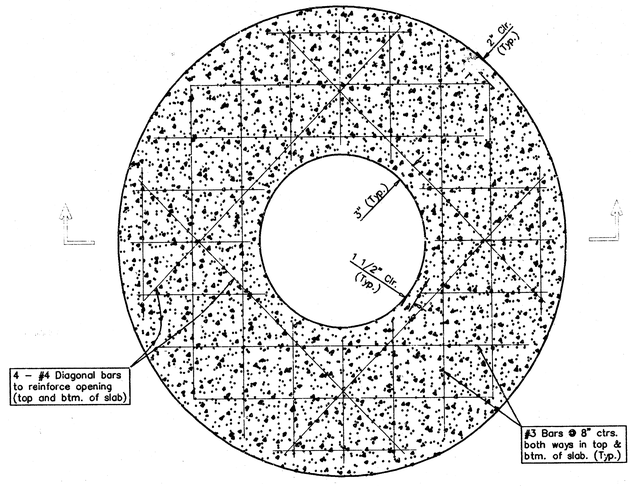


PLAN

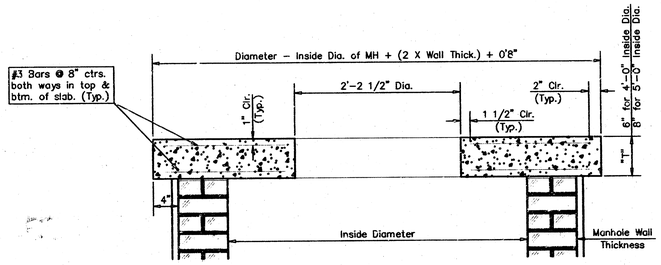


SECTION A-A

FLAT CONCRETE SLAB DETAILS

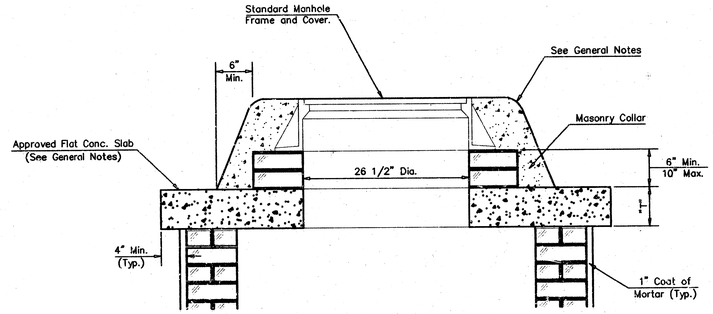


MASONRY COLLAR DETAIL

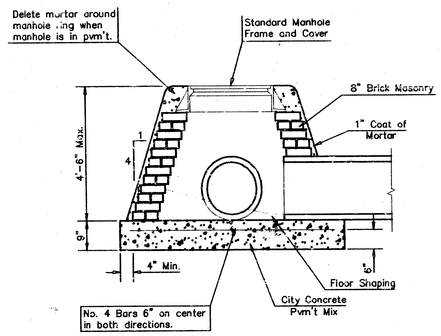


SPECIAL SHALLOW TYPE "A" MANHOLE

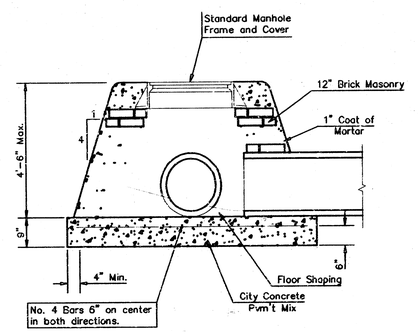


SPECIAL SHALLOW TYPE "B" MANHOLE

## GENERAL NOTES

1. Mortar used in masonry construction shall contain 8 sacks of cement per cubic yard. Concrete used in manhole bases shall conform to the requirements of concrete for concrete pavement construction as specified in the city standard paving specifications using city concrete cement mix without air entraining admixture. Mortar shall be placed around the manhole ring as shown on the drawings when manholes are constructed in unpaved areas. Type "A" shallow manholes can be used on sewers when the manhole is not located within public street pavement. Manholes constructed where pipe sizes are smaller than 24" shall have an inside diameter of 4'. Manholes constructed where pipe sizes are 24" or larger shall have an inside diameter of 5'. Completed manhole shall be without leaks and water tight.

2. Reinforcing steel shall be installed in the manhole bases and shall consist of no. 4 bars placed on 6" centers in both directions. The manhole base reinforcement shall be placed 6" above the bottom of the manhole base. All costs for furnishing and installing reinforcing steel shall be included in the unit price bid for the manhole.

3. The floors of all manholes shall be shaped with flow channels such that the manholes will be self cleaning and free of areas where solids could be deposited as sewage flows through the manhole from all inlet pipes to the outlet pipe. Flow channels shall be formed to match the bottom halves of the inflowing pipes and the outflowing pipe as shown by the drawings. Manhole floors shall have slopes of 3 inches per foot in the areas outside of the flow channels sloped toward the flow channels. Pipes laid through manholes shall have the top half removed to neat lines for the full inside diameter of the manhole. Manhole floors shall then be shaped around the bottom half of the pipe which forms the flow channel.

4. Pipes installed within the excavation made for the manhole shall be cradled with concrete to the limits of the manhole excavation. When clay pipe is used, the cradle shall extend to the first joint outside the manhole. The cradle shall be terminated at the clay pipe joint in a manner which will maintain the flexibility of the joint. Cost of cradle within manhole excavation or to clay pipe joints adjacent to manhole shall be included in the unit price bid for the manhole.

5. Manhole cover castings and manhole frame castings shall conform to the requirements as indicated in the standard specifications and as shown in the standard detail drawings.

6. The crowns of inflowing pipes shall never be set lower than the crown of the outflowing pipe.

7. Standard shallow manholes type "A" and "B" shall be paid for at the unit price bid per each for the type and diameter indicated. Standard special shallow manholes type "A" and "B" shall be paid for at the unit price bid per each for the type indicated. All standard shallow manhole diameters will be 4' unless indicated otherwise.

8. All brick used in manhole construction shall meet Grade SW of ASTM C652 or C62-87.

| No. | Date | By | Approved | Revision |
|---|---|---|---|---|
| 1 | | | | |
| 2 | | | | |
| 3 | | | | |
| 4 | | | | |

ABERDEEN 2ND ADDITION-PHASE II
SPECIAL SHALLOW MANHOLE TYPE "A" & "B" DETAIL
LATERAL 370, SOUTHWEST INTERCEPTOR SEWER
CITY OF WICHITA, KANSAS
MICHAEL E. LANDEBAK, P.E. - CITY ENGINEER
C.O.W. Project No. 468-82023 Intake Code 74.3682

POE & ASSOCIATES OF KANSAS, INC.
CONSULTING ENGINEERS
3040 E. Central, Suite 200 ■ Wichita, Ks. 67208 ■ 316/686-4114 ■ Fax 316/686-4444

FINAL

Engineer: J. Ubert
Drawn By: S. Schmidt
Poe Job No.: 1654
Date: October 1998

Sheet 9 of 12

F:\WPPS\OCA\P\654\Base.dwg Fri Oct 02 15:01:27 1998 James M. Ubert, Poe & Associates of Kansas, Inc.

F:\APPS\DCA\P\654\Base.dwg  Fri Oct 02 15:04:15 1998  James M. Ubert, Poe & Associates of Kansas, Inc.

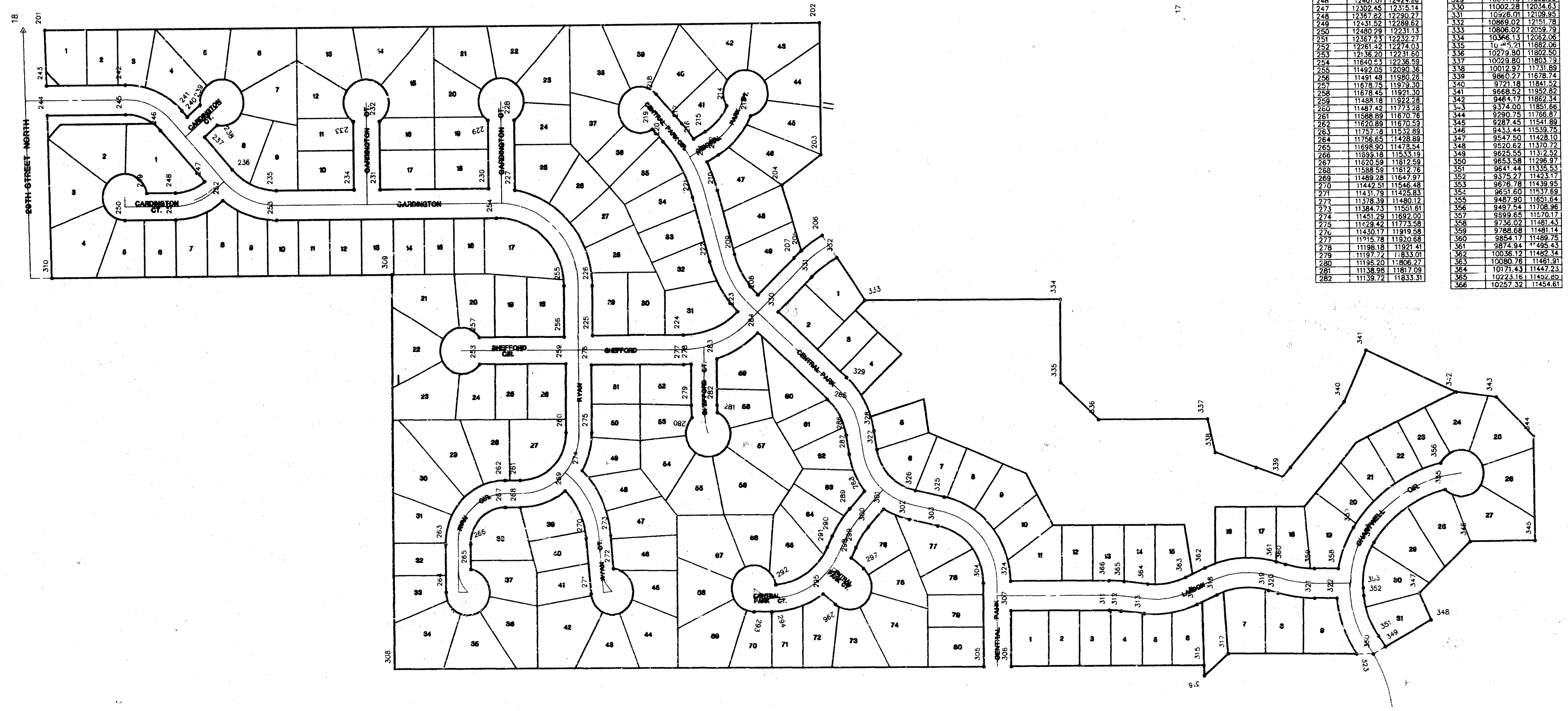


SCALE: 1" = 150'

| COORDINATE SCHEDULE | | |
|---|---|---|
| POINT # | NORTHING | EASTING |
| 17 | 10081.60 | 12667.33 |
| 201 | 12664.77 | 12641.29 |
| 202 | 10907.43 | 12659.01 |
| 203 | 10904.56 | 12374.02 |
| 204 | 10993.90 | 12308.12 |
| 205 | 10949.74 | 12166.79 |
| 206 | 10[illegible]01.96 | 12199.89 |
| 207 | 10966.77 | 12151.22 |
| 208 | 11047.30 | 12071.69 |
| 209 | 11100.18 | 12158.40 |
| 210 | 11138.72 | 12297.07 |
| 211 | 11162.11 | 12358.26 |
| 212 | 11136.40 | 12373.75 |
| 213 | 11063.74 | 12457.76 |
| 214 | 11117.49 | 12479.58 |
| 215 | 11166.31 | 12423.43 |
| 216 | 11192.04 | 12407.94 |
| 217 | 11219.03 | 12440.87 |
| 218 | 11277.95 | 12504.43 |
| 219 | 11286.93 | 12428.80 |
| 220 | 11261.57 | 12401.44 |
| 221 | 11194.60 | 12281.53 |
| 222 | 11156.06 | 12142.87 |
| 223 | 11092.91 | 12035.08 |
| 224 | 11216.11 | 11984.68 |
| 225 | 11427.50 | 11983.59 |
| 226 | 11428.05 | 12090.69 |
| 227 | 11599.82 | 12296.92 |
| 228 | 11601.34 | 12448.27 |
| 229 | 11559.34 | 12447.68 |
| 230 | 11657.85 | 12300.42 |
| 231 | 11905.84 | 12297.92 |
| 232 | 11907.33 | 12445.19 |
| 233 | 11965.32 | 12444.60 |
| 234 | 11963.84 | 12297.34 |
| 235 | 12136.85 | 12295.59 |
| 236 | 12239.44 | 12340.75 |
| 237 | 12302.65 | 12411.18 |
| 238 | 12274.17 | 12436.75 |
| 239 | 12312.91 | 12479.91 |
| 240 | 12341.39 | 12454.35 |
| 241 | 12353.37 | 12467.71 |
| 242 | 12479.34 | 12523.15 |
| 243 | 12661.07 | 12521.32 |
| 244 | 12659.10 | 12457.34 |
| 245 | 12478.70 | 12459.16 |
| 246 | 12401.01 | 12424.96 |
| 247 | 12302.45 | 12315.14 |
| 248 | 12367.82 | 12290.27 |
| 249 | 12431.52 | 12289.62 |
| 250 | 12480.29 | 12231.13 |
| 251 | 12367.23 | 12232.27 |
| 252 | 12261.42 | 12274.03 |
| 253 | 12136.20 | 12231.60 |
| 254 | 11640.53 | 12236.59 |
| 255 | 11492.05 | 12090.36 |
| 256 | 11491.48 | 11980.26 |
| 257 | 11678.75 | 11979.30 |
| 258 | 11678.45 | 11921.30 |
| 259 | 11488.18 | 11922.28 |
| 260 | 11487.42 | 11773.28 |
| 261 | 11588.89 | 11670.76 |
| 262 | 11620.89 | 11670.53 |
| 263 | 11757.18 | 11532.89 |
| 264 | 11756.65 | 11428.89 |
| 265 | 11698.90 | 11478.54 |
| 266 | 11699.18 | 11533.19 |
| 267 | 11620.59 | 11812.59 |
| 268 | 11588.59 | 11612.76 |
| 269 | 11489.28 | 11647.97 |
| 270 | 11442.51 | 11546.48 |
| 271 | 11431.79 | 11425.83 |
| 272 | 11378.39 | 11480.12 |
| 273 | 11384.73 | 11551.61 |
| 274 | 11451.29 | 11692.00 |
| 275 | 11429.42 | 11773.58 |
| 276 | 11430.17 | 11919.58 |
| 277 | 11215.78 | 11920.68 |
| 278 | 11198.18 | 11921.41 |
| 279 | 11197.72 | 11833.01 |
| 280 | 11195.20 | 11806.27 |
| 281 | 11138.98 | 11817.09 |
| 282 | 11139.72 | 11833.31 |

| COORDINATE SCHEDULE | | |
|---|---|---|
| POINT # | NORTHING | EASTING |
| 283 | 11140.24 | 11333.18 |
| 284 | 11047.88 | 11989.60 |
| 285 | 10890.35 | 11845.70 |
| 286 | 10848.72 | 11758.48 |
| 287 | 10842.19 | 11727.62 |
| 288 | 10807.16 | 11647.94 |
| 289 | 10841.41 | 11609.77 |
| 290 | 10880.12 | 11551.20 |
| 291 | 10891.38 | 11527.07 |
| 292 | 11008.43 | 11446.10 |
| 293 | 11057.42 | 11387.49 |
| 294 | 11018.13 | 11387.69 |
| 295 | 10[illegible]01.30 | 11428.34 |
| 296 | 10872.98 | 11403.29 |
| 297 | 10809.86 | 11480.86 |
| 298 | 10838.18 | 11503.90 |
| 299 | 10827.56 | 11526.68 |
| 300 | 10798.24 | 11571.03 |
| 301 | 10763.93 | 11609.20 |
| 302 | 10708.20 | 11586.53 |
| 303 | 10643.51 | 11572.74 |
| 304 | 10542.98 | 11449.19 |
| 305 | 10542.05 | 11269.14 |
| 306 | 10478.05 | 11269.47 |
| 307 | 10478.67 | 11389.47 |
| 308 | 11875.79 | 11262.27 |
| 309 | 11880.18 | 12114.17 |
| 310 | 12648.30 | 12106.43 |
| 311 | 10256.99 | 11390.61 |
| 312 | 10230.07 | 11389.22 |
| 313 | 10178.34 | 11383.61 |
| 314 | 10054.13 | 11403.72 |
| 315 | 10038.91 | 11271.73 |
| 316 | 10038.22 | 11249.38 |
| 317 | 9983.32 | 11296.99 |
| 318 | 10009.49 | 11424.15 |
| 319 | 9891.84 | 11[illegible]3.70 |
| 320 | 9871.06 | 11428.02 |
| 321 | 9786.32 | 11417.14 |
| 322 | 9739.01 | 11417.41 |
| 323 | 9692.51 | 11296.97 |
| 324 | 10479.04 | 11453.47 |
| 325 | 10630.17 | 11635.34 |
| 326 | 10694.86 | 11649.12 |
| 327 | 10778.99 | 11737.72 |
| 328 | 10785.52 | 11778.57 |
| 329 | 10847.19 | 11892.95 |
| 330 | 11002.28 | 12034.63 |
| 331 | 10926.01 | 12109.95 |
| 332 | 10869.02 | 12151.78 |
| 333 | 10806.02 | 12059.79 |
| 334 | 10366.13 | 12062.06 |
| 335 | 10[illegible]5.21 | 11882.06 |
| 336 | 10279.80 | 11802.50 |
| 337 | 10029.80 | 11803.79 |
| 338 | 10012.97 | 11731.89 |
| 339 | 9860.27 | 11678.74 |
| 340 | 9721.18 | 11841.52 |
| 341 | 9668.52 | 11952.82 |
| 342 | 9464.17 | 11862.34 |
| 343 | 9374.00 | 11851.66 |
| 344 | 9290.75 | 11766.87 |
| 345 | 9287.45 | 11541.89 |
| 346 | 9433.44 | 11539.75 |
| 347 | 9547.50 | 11428.10 |
| 348 | 9520.62 | 11370.72 |
| 349 | 9625.55 | 11312.52 |
| 350 | 9653.58 | 11296.97 |
| 351 | 9641.44 | 11335.53 |
| 352 | 9375.27 | 11423.17 |
| 353 | 9676.78 | 11439.95 |
| 354 | 9651.60 | 11537.69 |
| 355 | 9487.90 | 11651.64 |
| 356 | 9497.54 | 11708.96 |
| 357 | 9599.65 | 11570.17 |
| 358 | 9736.02 | 11481.43 |
| 359 | 9788.68 | 11481.14 |
| 360 | 9854.17 | 11489.75 |
| 361 | 9874.94 | 11495.43 |
| 362 | 10036.12 | 11482.34 |
| 363 | 10080.76 | 11461.91 |
| 364 | 10171.43 | 11447.23 |
| 365 | 10223.16 | 11452.85 |
| 366 | 10257.32 | 11454.61 |

| No. | Date | By | Approved | Revision |
|---|---|---|---|---|
| △ | | | | |
| △ | | | | |
| △ | | | | |
| △ | | | | |

ABERDEEN 2ND ADDITION–PHASE II
COORDINATE POINTS LIST
LATERAL 370, SOUTHWEST INTERCEPTOR SEWER
CITY OF WICHITA, KANSAS
MICHAEL E. LINDEBAK, P.E. – CITY ENGINEER
C.O.W. Project No. 468-82625    Index Code 743682

POE & ASSOCIATES OF KANSAS, INC.
CONSULTING ENGINEERS
5940 E. Central, Suite 200 ■ Wichita KS 67208 ■ 316/685-4114 ■ Fax 316/685-4441

FINAL

Engineer: J. Ubert
Drawn By: S. Schmidt
Poe Job No.: 1654
Date: October 1998

Sheet 10 of 12

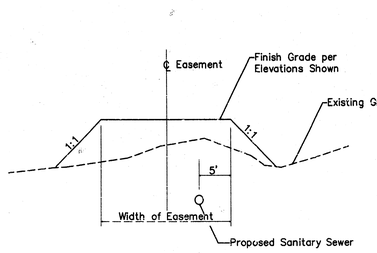


FILL SECTION

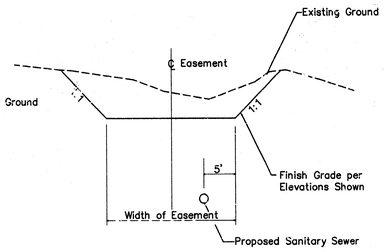


CUT SECTION

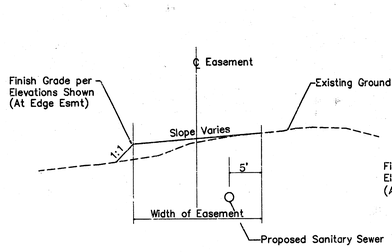


FILL SECTION

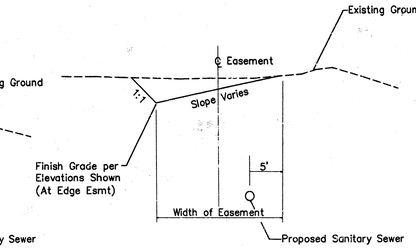


CUT SECTION

GRAPHIC SCALE

80 0 40 80 160

(IN FEET)

1 INCH = 80 FT.

TYPICAL EASEMENT GRADING

TYPICAL EASEMENT GRADING
(Along East Edge of Addition – Matching Existing Ground)

EARTHWORK SUMMARY
(For Information Only)

Cut: 2383 CY
Fill: 546 CY

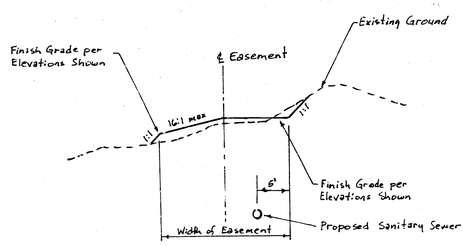


CUT/FILL SECTION

⚠2

SPECIAL EASEMENT GRADING

NOTE:
Sanitary Sewer Contractor Shall Grade All Shaded Easements to the Elevations Shown. (See Detail this Sheet)

Waste Areas

| No. | Date | By | Approved | Revision |
|---|---|---|---|---|
| | | | | |

ABERDEEN 2ND ADDITION-PHASE II
EASEMENT GRADING PLAN
LATERAL J70, SOUTHWEST INTERCEPTOR SEWER
CITY OF WICHITA, KANSAS
MICHAEL E. LINDEBAK, P.E. – CITY ENGINEER
C.O.W. Project No. 468-82625 Index Code 743682

POE & ASSOCIATES OF KANSAS, INC.
CONSULTING ENGINEERS
3940 E. Central, Suite 200 ■ Wichita KS 67208 ■ 316/685-4114 ■ Fax 316/685-4444

FINAL

Engineer: J. Ubert
Drawn By: S. Schmidt
Poe Job No.: 1654
Date: October 1998
Sheet 11 of 12

F:\APPS\DCA\P1654\Base.dwg Mon Oct 05 13:06:25 1998 James M. Ubert, Poe & Associates of Kansas, Inc.

PC 71-93

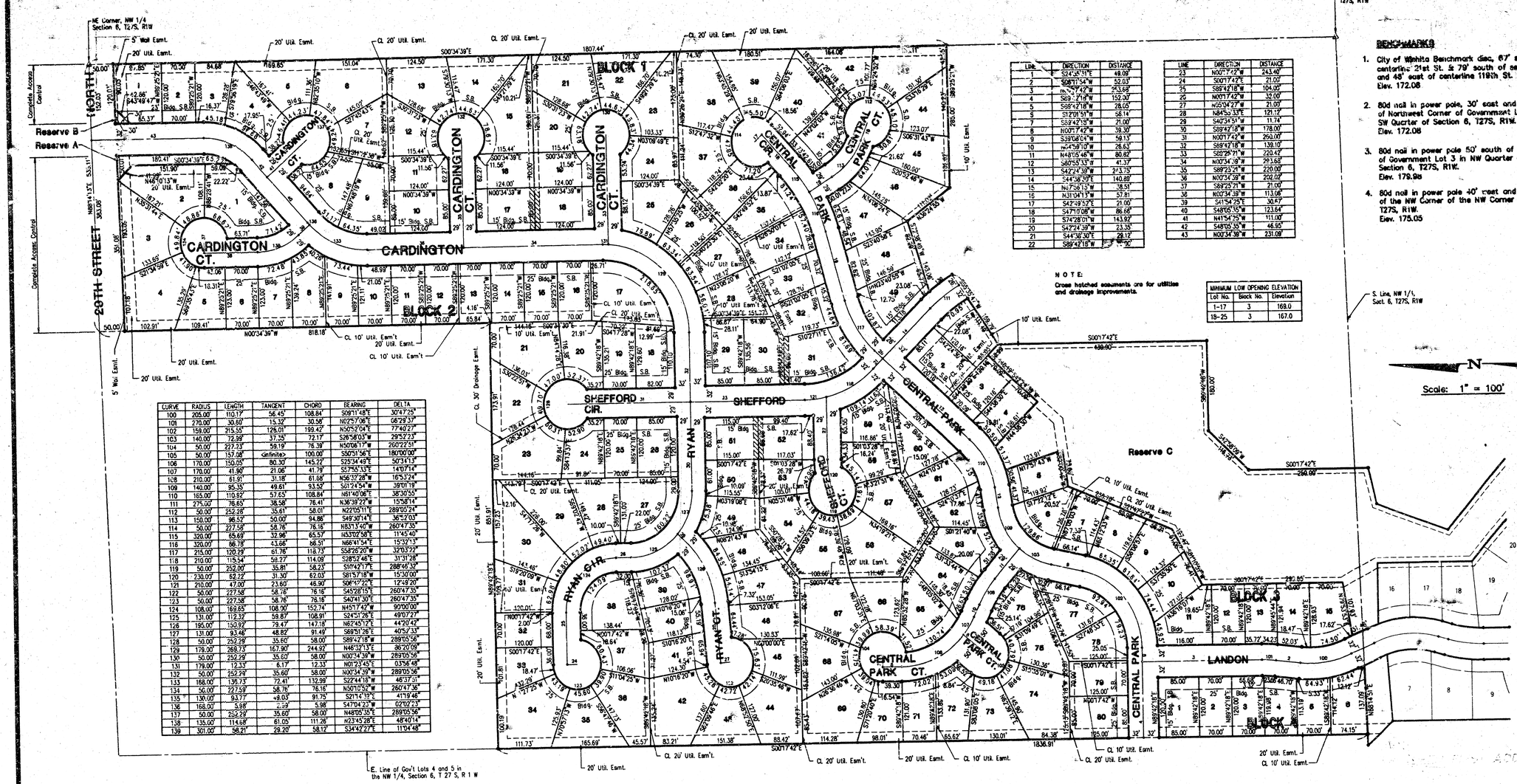


| CURVE | RADIUS | LENGTH | TANGENT | CHORD | BEARING | DELTA |
|---|---|---|---|---|---|---|
| 100 | 205.00' | 110.17' | 56.45' | 108.84' | S09°11'48"E | 30°47'25" |
| 101 | 270.00' | 30.80' | 15.32' | 30.58' | N02°57'06"E | 06°29'37" |
| 102 | 159.00' | 215.55' | 126.01' | 199.42' | N50°52'04"E | 77°40'27" |
| 103 | 140.00' | 72.99' | 37.35' | 72.17' | S26°58'03"W | 29°52'23" |
| 104 | 50.00' | 227.23' | 59.19' | 76.39' | N50°06'17"W | 260°22'51" |
| 105 | 50.00' | 157.08' | <infinite> | 100.00' | S50°51'56"E | 180°00'00" |
| 106 | 170.00' | 150.05' | 80.30' | 145.22' | S25°34'49"E | 50°34'13" |
| 107 | 170.00' | 41.90' | 21.06' | 41.79' | S07°55'13"E | 14°07'14" |
| 108 | 210.00' | 61.91' | 31.18' | 61.68' | N56°37'28"W | 16°53'24" |
| 109 | 140.00' | 95.35' | 49.61' | 93.52' | S61°24'54"W | 39°01'19" |
| 110 | 165.00' | 110.92' | 57.63' | 108.84' | N61°40'08"E | 38°30'55" |
| 111 | 275.00' | 76.65' | 38.58' | 76.41' | N36°39'22"W | 15°58'14" |
| 112 | 50.00' | 252.28' | 35.61' | 58.01' | N22°05'11"E | 289°05'24" |
| 113 | 150.00' | 96.52' | 50.00' | 94.86' | S49°30'14"E | 36°52'03" |
| 114 | 50.00' | 227.58' | 58.76' | 76.16' | N83°13'40"W | 260°47'35" |
| 115 | 320.00' | 65.69' | 32.96' | 65.57' | N53°02'58"E | 11°45'40" |
| 116 | 320.00' | 86.78' | 43.66' | 86.51' | N66°41'54"E | 15°32'13" |
| 117 | 215.00' | 120.29' | 61.76' | 118.73' | S58°26'20"W | 32°03'22" |
| 118 | 210.00' | 115.54' | 59.27' | 114.09' | S28°52'46"E | 31°31'28" |
| 119 | 50.00' | 252.00' | 35.81' | 58.23' | S10°42'17"E | 288°46'32" |
| 120 | 230.00' | 62.27' | 31.30' | 62.03' | S81°57'18"W | 15°30'00" |
| 121 | 210.00' | 47.00' | 23.60' | 46.90' | S06°47'22"E | 12°49'20" |
| 122 | 50.00' | 227.58' | 58.76' | 76.16' | S45°28'15"E | 260°47'35" |
| 123 | 50.00' | 227.58' | 58.76' | 76.16' | S40°41'30"E | 260°47'35" |
| 124 | 108.00' | 169.65' | 108.00' | 152.71' | N45°17'42"W | 90°00'00" |
| 125 | 131.00' | 112.32' | 59.87' | 108.91' | S24°51'28"E | 49°07'27" |
| 126 | 195.00' | 150.92' | 79.47' | 147.18' | N62°45'12"E | 44°20'42" |
| 127 | 131.00' | 93.46' | 48.82' | 91.49' | S69°51'26"E | 40°53'33" |
| 128 | 50.00' | 252.29' | 35.60' | 58.00' | S89°42'18"W | 288°05'56" |
| 129 | 178.00' | 268.73' | 167.80' | 244.92' | N46°12'13"E | 86°29'09" |
| 130 | 50.00' | 252.29' | 35.60' | 58.00' | N00°34'39"W | 288°05'56" |
| 131 | 179.00' | 12.33' | 6.17' | 12.33' | N01°23'45"E | 03°56'48" |
| 132 | 50.00' | 252.29' | 35.60' | 58.00' | N00°34'39"W | 288°05'56" |
| 133 | 166.00' | 136.73' | 72.41' | 132.99' | S22°41'19"W | 46°37'51" |
| 134 | 50.00' | 227.58' | 58.76' | 76.16' | N50°10'52"W | 260°47'35" |
| 135 | 130.00' | 93.77' | <null> | 91.75' | S21°14'39"E | 41°19'46" |
| 136 | 168.00' | 5.98' | 2.99' | 5.98' | S47°04'20"W | 02°02'23" |
| 137 | 50.00' | 252.29' | 35.60' | 58.00' | N48°05'35"E | 288°05'56" |
| 138 | 135.00' | 114.68' | 61.00' | 111.26' | N23°43'28"E | 48°40'14" |
| 139 | 301.00' | 58.21' | 29.20' | 58.12' | S34°42'27"E | 11°04'48" |

| LINE | DIRECTION | DISTANCE |
|---|---|---|
| 1 | S24°36'31"E | 48.09' |
| 2 | S08°11'54"W | 52.03' |
| 3 | [illegible]°47'42"W | 253.69' |
| 4 | S89°42'18"W | 152.00' |
| 5 | S89°42'18"W | 28.05' |
| 6 | S12°01'51"W | 58.14' |
| 7 | S89°42'18"W | 21.00' |
| 8 | N00°17'42"W | 39.30' |
| 9 | S39°08'14"W | 58.13' |
| 10 | N54°59'10"W | 28.63' |
| 11 | N48°05'48"W | 80.82' |
| 12 | S80°55'33"W | 41.37' |
| 13 | S42°24'39"W | 243.35' |
| 14 | S44°38'20"E | 140.89' |
| 15 | N07°58'15"W | 38.51' |
| 16 | N31°04'13"W | 57.81' |
| 17 | S42°49'52"E | 21.00' |
| 18 | S47°10'08"W | 86.66' |
| 19 | S74°28'01"W | 143.92' |
| 20 | S47°24'39"W | 23.35' |
| 21 | S44°38'20"E | 29.12' |
| 22 | S89°42'18"W | 90' |

| LINE | DIRECTION | DISTANCE |
|---|---|---|
| 23 | N00°17'42"W | 243.40' |
| 24 | S00°17'42"E | 21.00' |
| 25 | S89°42'18"W | 104.00' |
| 26 | N00°17'42"W | 32.00' |
| 27 | N05°04'27"W | 21.00' |
| 28 | N84°55'33"E | 121.12' |
| 29 | S40°34'51"W | 11.74' |
| 30 | S89°42'18"W | 178.00' |
| 31 | N00°17'42"W | 290.00' |
| 32 | S89°42'18"W | 139.10' |
| 33 | S89°25'21"W | 220.42' |
| 34 | N00°34'39"W | 293.68' |
| 35 | S89°25'21"W | 220.00' |
| 36 | N00°34'39"W | 202.00' |
| 37 | S89°25'21"W | 21.00' |
| 38 | N00°34'39"W | 113.08' |
| 39 | S41°54'25"E | 36.67' |
| 40 | S48°05'35"W | 123.64' |
| 41 | N41°54'25"W | 111.00' |
| 42 | S48°05'35"W | 46.95' |
| 43 | N00°34'39"W | 231.09' |

NOTE:
Cross hatched easements are for utilities and drainage improvements.

| MINIMUM LOW OPENING ELEVATION | | |
|---|---|---|
| Lot No. | Block No. | Elevation |
| 1-17 | 3 | 168.0 |
| 18-25 | 3 | 167.0 |

**BENCHMARKS**

1. City of Wichita Benchmark disc, 67' south of centerline 21st St. & 79' south of section line, and 48' east of centerline 119th, St. Elev. 172.08
2. 80d nail in power pole, 30' east and 50' south of Northwest Corner of Government Lot 6 in SW Quarter of Section 6, T27S, R1W. Elev. 172.08
3. 80d nail in power pole 50' south of NE corner of Government Lot 3 in NW Quarter of Section 6, T27S, R1W. Elev. 179.96
4. 80d nail in power pole 40' east and 40' north of the NW Corner of the NW Corner of Sec. 6, T27S, R1W. Elev. 175.05

# ABERDEEN SECOND ADDITION

## TO WICHITA, SEDGWICK COUNTY, KANSAS

KENNY E. HILL LICENSED LS-884 KANSAS LAND SURVEYOR

9-3-96

Sheet No. 12 of 12

PC 71-93 PC 71-93

K:\APPS\DATA\PLOTS\ZBALL Fri Aug 30 08:27:59 1996 Kelly Henderson - Poe and Associates, Inc.