LAT. 44, MAIN 3, SOUTHWEST INTERCEPTOR SEWER

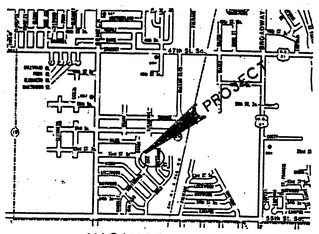

VICINITY MAP

TO SERVE

SAND ADDITION

PROJECT NUMBER

468-76-245-81804-000-000-001

INDEX CODE 740530

GENERAL NOTES

1. Underground utility service lines and overhead utility pole lines are to be adjusted as necessary by others prior to construction unless the plans specifically call for their adjustment by the Contractor or unless the plans specifically identify a utility to be adjusted by its owner during construction. Existing utilities and their location, as shown on the plans, represent the best information obtainable for design. The Contractor will be required to work around existing utilities within the right-of-way which do not conflict with proposed construction.

2. Trees and shrubs in public right-of-way which are in direct conflict with proposed new construction shall be removed by the Contractor with the Engineer's approval. Trees and shrubs which are not in direct conflict with proposed new construction shall be saved and protected from damage.

3. The Contractor shall be responsible for preserving property irons. The Contractor will be required to re-establish any property irons which are damaged or destroyed by his construction operations. Such irons shall be re-established by a licensed land surveyor in accordance with state laws.

4. Contractor will be required to provide notice to utility companies a minimum of twenty-four (24) hours prior to any excavation, as follows:

Kansas One-Call	687-2470

The Contractor must notify the following in case of an emergency:

Cablevision	262-4270 or 263-2061
K.P.L. Gas Service Company	263-7511
Kansas Gas & Electric Company	264-1141
Arkla Gas Company	942-8350 or 263-8151
Southwestern Bell Telephone Company	1-571-2611
City of Wichita Water Department	268-4908
City of Wichita Sewer Maintenance	268-4071

5. Contractor shall grade the sanitary sewer alignment to the profile and elevation shown on the easement grading plan. All costs for grading shall be subsidiary to the project.

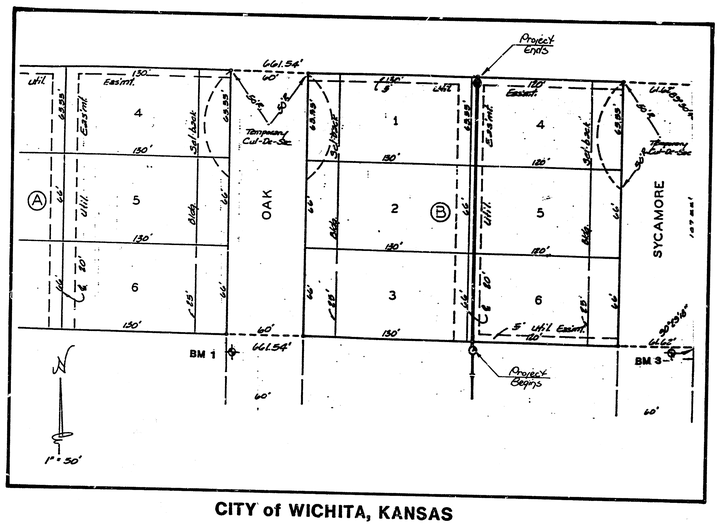

CITY of WICHITA, KANSAS

MICHAEL E. LINDEBAK
CITY ENGINEER

BENEFIT DISTRICT

BUILT PER PLAN
RDL
11-90

INDEX of SHEETS

1 . . . . . TITLE SHEET
2 . . . . . PLAN / PROFILE
3 . . . . . TYPICAL SHEET

BENCHMARKS

1. NE COR. CONC. DRIVE LOT 5, BLK. A SOUTH SENECA GARDENS 3RD ADDITION (#5305) ELEV. = 183.36 CITY DATUM
2. RR SPIKE IN LIGHT POLE NW COR. 52ND STREET SO. AT OSAGE ST. ELEV. = 183.85 CITY DATUM
3. "□" CUT T.C. ESIDE SYCAMORE ST., 5' So. NL LOT 7, BLK. 10 SO. SENECA GARDENS 4TH ADDN.. ELEV. = 184.09 CITY DATUM

ROBERT VOTEN LICENSED 8470 KANSAS PROFESSIONAL ENGINEER

TITLE SHEET

BAUGHMAN COMPANY, P.A.
SURVEYING & ENGINEERING
316/262-7271 • 315 ELLIS • WICHITA, KANSAS 67211

Design:	Drawn:	Approved:	Date:	Scale:	Sheet:	of:
NBW	JSK	RDL	7/90	Noted	1	3

FILMED FROM THE BEST AVAILABLE COPY

Bench Marks:

1. NE Corner Conc. Dr.: Lot 5, Blk. A South Seneca Gardens 3rd Addition Elev. = 183.36
2. "□" cut T.C. E. Side Sycamore St., 5' South NL Lot 7, Blk. 10 South Seneca Gardens 4th Addition Elev. = 184.09

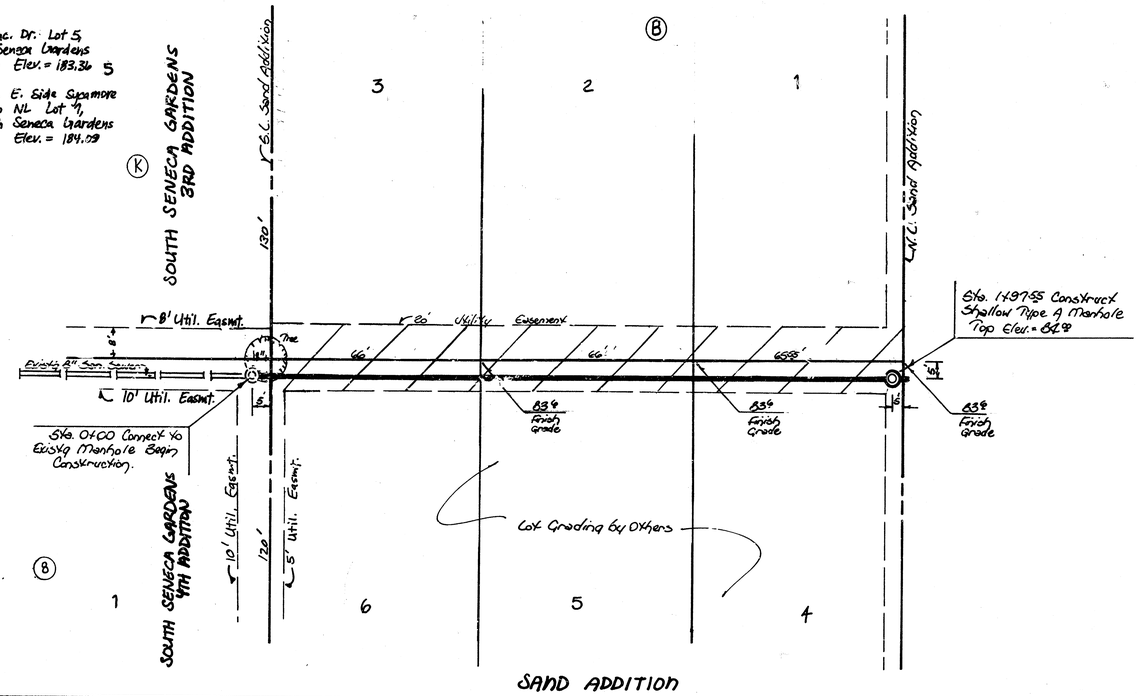

1" = 20' Horz.
1" = 5' Vert.

Area to be Graded (See Profile)

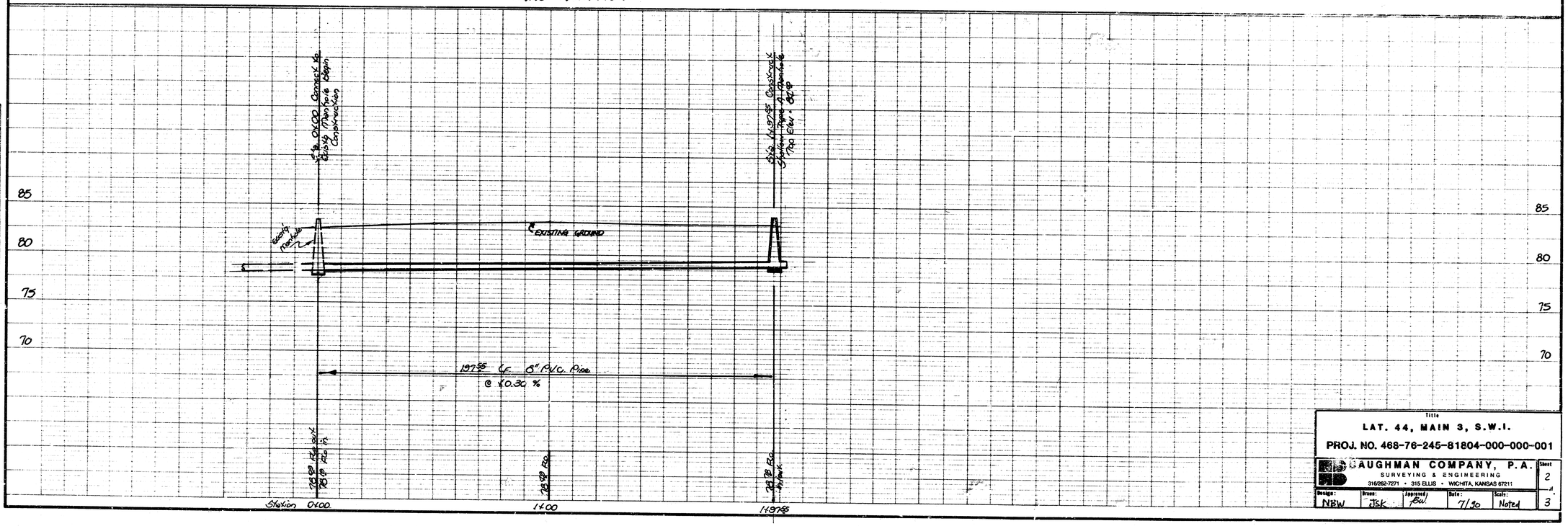

PROFILE

Title
LAT. 44, MAIN 3, S.W.I.
PROJ. NO. 468-76-245-81804-000-000-001

BAUGHMAN COMPANY, P.A.
SURVEYING & ENGINEERING
316/262-7271 • 315 ELLIS • WICHITA, KANSAS 67211

Design:	Drawn:	Approved:	Date:	Scale:	Sheet
NBW	JSK		7/30	Noted	2 3

FILMED FROM THE BEST AVAILABLE COPY

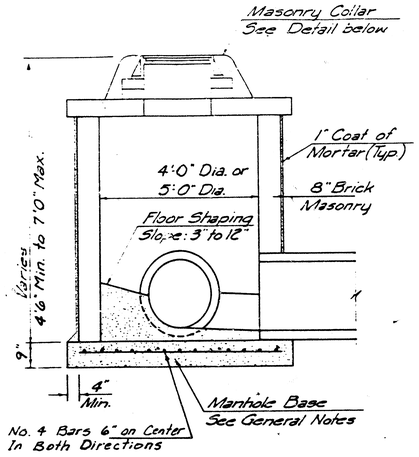

SHALLOW TYPE "A" MANHOLE

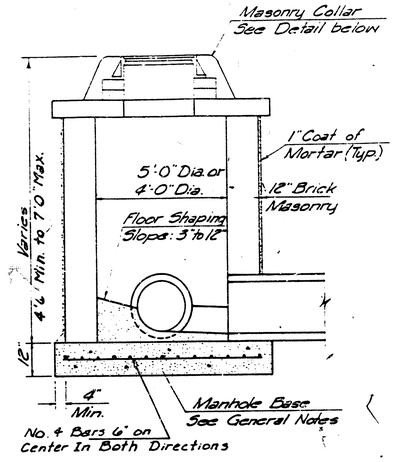

SHALLOW TYPE "B" MANHOLE

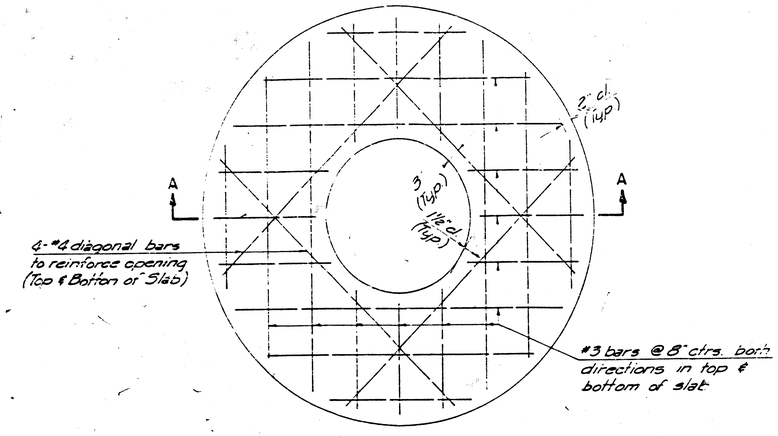

PLAN

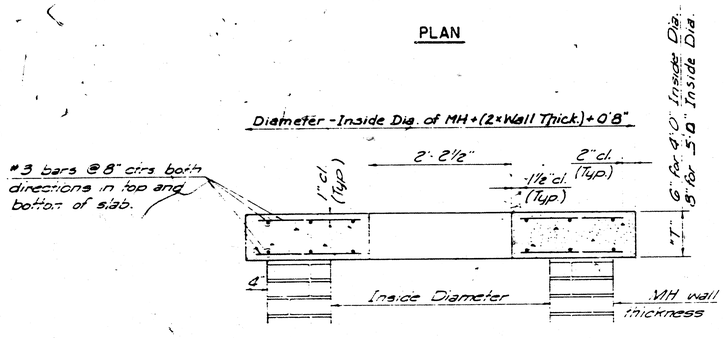

SECTION A-A

FLAT CONCRETE SLAB DETAILS

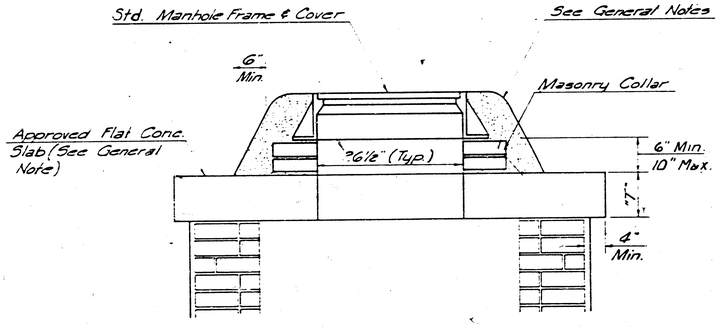

MASONRY COLLAR DETAIL

GENERAL NOTES

1. MORTAR USED IN MASONRY CONSTRUCTION SHALL CONTAIN 8 SACKS OF CEMENT PER CUBIC YARD. CONCRETE USED IN MANHOLE BASES SHALL CONFORM TO THE REQUIREMENTS OF CONCRETE FOR CONCRETE PAVEMENT CONSTRUCTION AS SPECIFIED IN THE CITY STANDARD PAVING SPECIFICATIONS USING CITY CONCRETE CEMENT MIX WITHOUT AIR ENTRAINING ADMIXTURE. MORTAR SHALL BE PLACED AROUND THE MANHOLE RING AS SHOWN ON THE DRAWINGS WHEN MANHOLES ARE CONSTRUCTED IN UNPAVED AREAS. TYPE "A" SHALLOW MANHOLES CAN BE USED ON SEWERS WHEN THE MANHOLE IS NOT LOCATED WITHIN PUBLIC STREET PAVEMENT. MANHOLES CONSTRUCTED WHERE PIPE SIZES ARE SMALLER THAN 24" SHALL HAVE AN INSIDE DIAMETER OF 4'. MANHOLES CONSTRUCTED WHERE PIPE SIZES ARE 24" OR LARGER SHALL HAVE AN INSIDE DIAMETER OF 5'. COMPLETED MANHOLE SHALL BE WITHOUT LEAKS AND WATER TIGHT.

2. REINFORCING STEEL SHALL BE INSTALLED IN THE MANHOLE BASES AND SHALL CONSIST OF NO. 4 BARS PLACED ON 6" CENTERS IN BOTH DIRECTIONS. THE MANHOLE BASE REINFORCEMENT SHALL BE PLACED 6" ABOVE THE BOTTOM OF THE MANHOLE BASE. ALL COSTS FOR FURNISHING AND INSTALLING REINFORCING STEEL SHALL BE INCLUDED IN THE UNIT PRICE BID FOR THE MANHOLE.

3. THE FLOORS OF ALL MANHOLES SHALL BE SHAPED WITH FLOW CHANNELS SUCH THAT THE MANHOLES WILL BE SELF CLEANING AND FREE OF AREAS WHERE SOLIDS COULD BE DEPOSITED AS SEWAGE FLOWS THROUGH THE MANHOLE FROM ALL INLET PIPES TO THE OUTLET PIPE. FLOW CHANNELS SHALL BE FORMED TO MATCH THE BOTTOM HALVES OF THE INFLOWING PIPES AND THE OUTFLOWING PIPE AS SHOWN BY THE DRAWINGS. MANHOLE FLOORS SHALL HAVE SLOPES OF 3 INCHES PER FOOT IN THE AREAS OUTSIDE OF THE FLOW CHANNELS SLOPED TOWARD THE FLOW CHANNELS. PIPES LAID THROUGH MANHOLES SHALL HAVE THE TOP HALF REMOVED TO NEAT LINES FOR THE FULL INSIDE DIAMETER OF THE MANHOLE. MANHOLE FLOORS SHALL THEN BE SHAPED AROUND THE BOTTOM HALF OF THE PIPE WHICH FORMS THE FLOW CHANNEL.

4. PIPES INSTALLED WITHIN THE EXCAVATION MADE FOR THE MANHOLE SHALL BE CRADLED WITH CONCRETE TO THE LIMITS OF THE MANHOLE EXCAVATION. WHEN CLAY PIPE IS USED, THE CRADLE SHALL EXTEND TO THE FIRST JOINT OUTSIDE THE MANHOLE. THE CRADLE SHALL BE TERMINATED AT THE CLAY PIPE JOINT IN A MANNER WHICH WILL MAINTAIN THE FLEXIBILITY OF THE JOINT. COST OF CRADLE WITHIN MANHOLE EXCAVATION OR TO CLAY PIPE JOINTS ADJACENT TO MANHOLE SHALL BE INCLUDED IN THE UNIT PRICE BID FOR THE MANHOLE.

5. MANHOLE COVER CASTINGS AND MANHOLE FRAME CASTINGS SHALL CONFORM TO THE REQUIREMENTS AS INDICATED IN THE STANDARD SPECIFICATIONS AND AS SHOWN IN THE STANDARD DETAIL DRAWINGS.

6. THE CROWNS OF INFLOWING PIPES SHALL NEVER BE SET LOWER THAN THE CROWN OF THE OUTFLOWING PIPE.

7. STANDARD SHALLOW MANHOLES TYPE "A" AND "B" SHALL BE PAID FOR AT THE UNIT PRICE BID PER EACH FOR THE TYPE AND DIAMETER INDICATED. STANDARD SPECIAL SHALLOW MANHOLES TYPE "A" AND "B" SHALL BE PAID FOR AT THE UNIT PRICE BID PER EACH FOR THE TYPE INDICATED. ALL STANDARD SHALLOW MANHOLE DIAMETERS WILL BE 4' UNLESS INDICATED OTHERWISE.

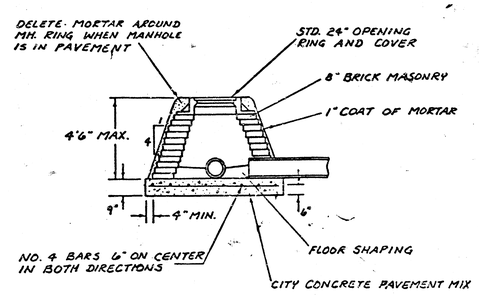

SPECIAL SHALLOW TYPE 'A' MANHOLE

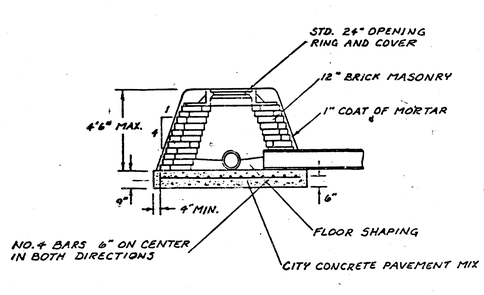

SPECIAL SHALLOW TYPE 'B' MANHOLE

CITY OF WICHITA, KANSAS
STANDARD SHALLOW MANHOLES
TYPE 'A' AND TYPE 'B'

Designed by		Checked by	
Drawn by		Date	Job No.

FILMED FROM THE BEST AVAILABLE COPY