Sanitary Sewer Extensions To Serve

RIDGE PLAZA 11TH ADDITION

LATERAL 51 - MAIN 4 - S.W.I.

INDEX CODE: 740829

Project No.

468-76-245-82130-000-000-001

City of Wichita, Kansas - Michael E. Lindebak, City Engineer

INDEX

1. TITLE SHEET
2. PLAN/PROFILE SANITARY SEWER
3. PLAT OF RIDGE PLAZA 11TH ADDITION

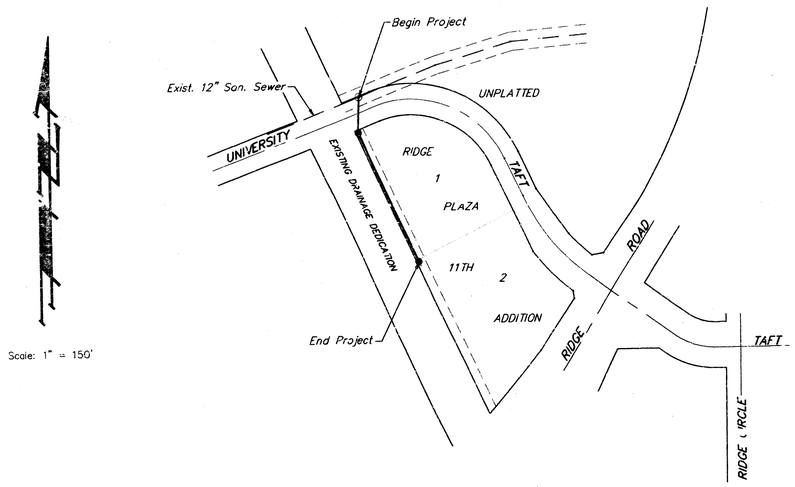

Scale: 1" = 150'

BENEFIT DISTRICT

GENERAL NOTES

1. Underground utility service lines and overhead utility pole lines are to be adjusted as necessary by others prior to construction unless the plans specifically call for their adjustment by the Contractor or unless the plans specifically identify a utility to be adjusted by its owner during construction. Existing utilities and their location, as shown on the plans, represent the best information obtainable for design. The Contractor will be required to work around existing utilities within the right-of-way which do not conflict with proposed construction.

2. Trees and shrubs in public right-of-way which are in direct conflict with proposed new construction shall be removed by the Contractor with the Engineer's approval. Trees and shrubs which are not in direct conflict with proposed new construction shall be saved and protected from damage.

3. The Contractor shall be responsible for preserving property irons. The Contractor will be required to re-establish any property irons which are damaged or destroyed by his construction operations. Such irons shall be re-established by a licensed land surveyor in accordance with state laws.

4. Contractor shall grade the sanitary sewer alignment to the profile and elevation shown on the easement grading plan. All costs for grading shall be subsidary to the project.

Booked per plan RDL

CHRISTOPHER MICHAEL BAUGHMAN LICENSED 11631 PROFESSIONAL ENGINEER KANSAS

1 1/3

BAUGHMAN COMPANY P. A.
ENGINEERING & SURVERYING
316/262-7271 • 315 ELUS • WICHITA, KANSAS 67211

CHADSWORTH ADDITION

WICHITA, SEDGWICK COUNTY, KANSAS

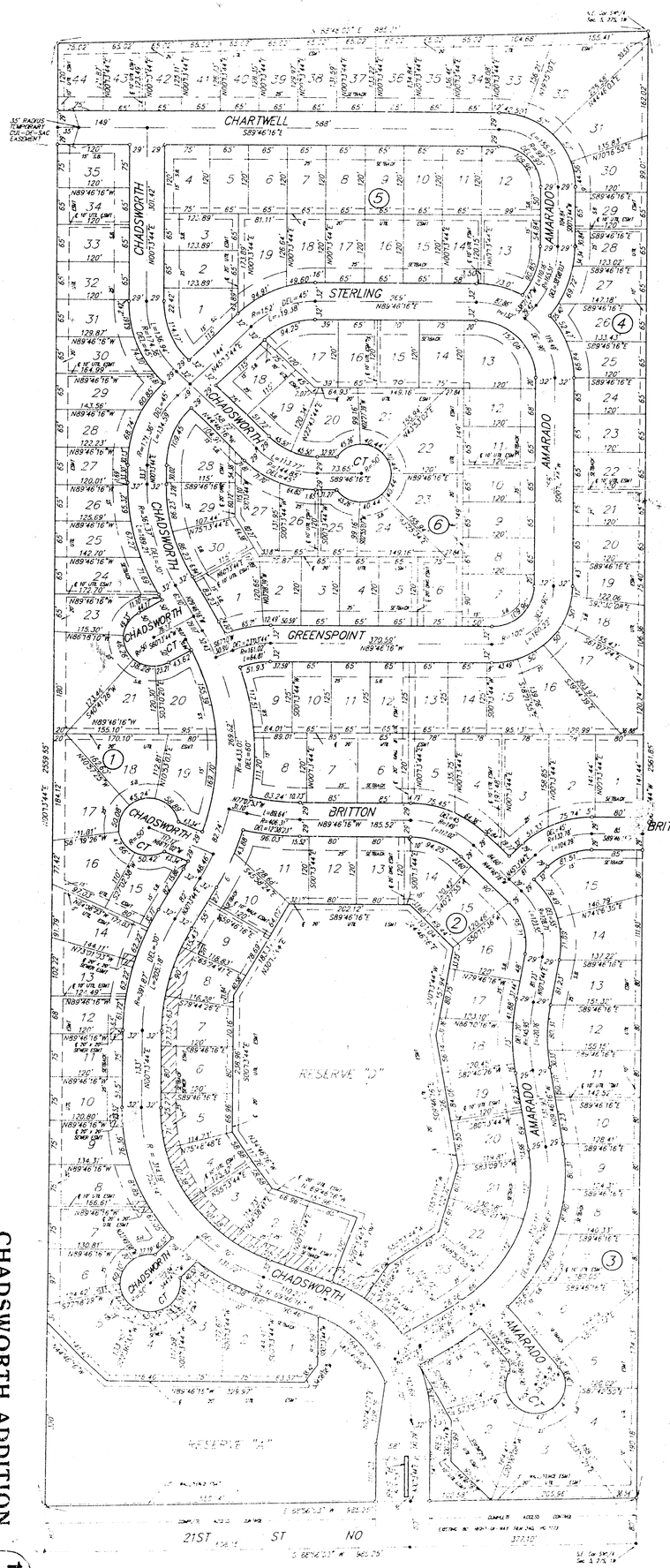

1" = 100'
o = IRON

MINIMUM BUILDING PAD ELEVATIONS

Lowest Floor Elevation of Structure 1634 City Datum / 1350 M.S.L.

Lots 28, 29, 30, 31, 32, 33, 34, and 35, Block 1
Lots 28, 29, 30, 31, 32, 33, 34, 35, 36, 37, 38, 39, 40, 41, 42, 43, and 44, Block 4,
Lots 1, 2, 3, 4, 5, 6, 7, 8, 9, 10, 11, 12, 13, 14, 15, 16, 17, 18, and 19, Block 5,
Lots 13, 14, 15, 16, 17, 18, 19, 20 21, and Lot 28, Block 6

Lowest Opening Elevation to Structure 160 City Datum / 1347.4 M.S.L.

Lots 1, 2, 3, 4, and 5, Block 1,
Lots 1, 2, 3, 4, 5, 6, 7, 8, 9, 10, 11, 12, 13, 14, 15, 16, 17, 18, 19, 20, 21, 22, 23, and 24, Block 2

BENCH MARK:
Square Cut on top of Headwall at N.E. Corner of RCBC on the north side of 21st St. No., west of Keith Elevation = 161.28 City Datum Elevation = 1348.68 M.S.L.

State of Kansas)
Sedgwick County) SS We, Baughman Company, P.A., Surveyors in aforesaid county and state do hereby certify that we have surveyed and platted "CHADSWORTH ADDITION", Wichita, Sedgwick County, Kansas and that the accompanying plat is a true and correct exhibit of the property surveyed, described as the east 985 feet of the SW1/4 of Sec. 5, Twp. 27-S, R-1-W of the 6th P.M., Sedgwick County, Kansas except the south 80 feet thereof deeded to the Sedgwick County Board of Commissioners for road purposes.

Existing public easements, dedications and access controls being vacated by virtue of K.S.A. 12-512(b).

Baughman Company, P.A.

Date 15 Jan 91

Mark A. Savoy Surveyor
Mark A. Savoy

Know all men by these presents that we, the undersigned, have caused the land described in the surveyors certificate to be platted into Lots, Blocks, Reserves and Streets to be known as "CHADSWORTH ADDITION", Wichita, Sedgwick County, Kansas. Reserve "A" is hereby reserved for drainage purposes, open space, and landscaping, Reserve "B" is hereby reserved for landscaping, entry features and for the construction and maintenance of all public utilities. Reserve "C" is hereby reserved for open space, landscaping and entry features. Reserve "D" is hereby reserved for drainage purposes, open space, recreational purposes, and walks. All reserves shall be owned and maintained by the homeowners association for the addition. The wall/fence easements are hereby granted as indicated for the construction and maintenance of a private screening wall or fence and utility main lines and service lines are allowed to cross these easements. The walk easement is hereby granted for pedestrian access and sidewalk purposes and no fencing or other obstructions shall be allowed within said easement. The utility easements are hereby granted for the construction and maintenance of all public utilities. The drainage easements are hereby granted for drainage purposes. The tempory Cul-De-Sac will expire at such time as Chartwell is extended further west or is terminated as a permanent Cul-De-Sac on the property to the west. The streets are hereby dedicated to and for the use of the public. All abutters rights of access to or from 21st. St. No. over and across the south line of Reserve's "A" and "C" and Lots 2, 3, and 4, Block 3, are hereby granted to the appropriate governing body. Minimum Pad Elevations for lowest floor and lowest opening shall be as shown on the face of the plat.

Rider Land & Cattle Co.
a Colorado Partnership

_____ General Partner
Dwight C. Rider

3 A. H., Inc.

_____ President
Matthias F. Eck

State of Colorado)
_____ County) SS The foregoing instrument acknowledged before me, this _____ day of _____ 19__, by Dwight C. Rider, General Partner of Rider Land & Cattle Co., a Colorado Partnership, on behalf of the Partnership.

_____ Notary Public
My App't. Exp. _____ Melody J. Porras

State of Kansas)
Sedgwick County) SS The foregoing instrument acknowledged before me, this 17th day of January 1991, by Matthias F. Eck, President of 3 A. H., Inc., on behalf of the corporation.

_____ Notary Public
My App't. Exp. 1-3-91 Mildred E. Franz

This plat of "CHADSWORTH ADDITION", Wichita, Sedgwick County, Kansas, has been submitted to and approved by the Wichita-Sedgwick County Metropolitan Area Planning Commission, Wichita, Kansas.

Dated this _____ day of _____ 19__.
Wichita-Sedgwick County Metropolitan Area Planning Commission.

_____ Chairman
George D. Sherman

_____ Secretary
Marvin S. Krout

This plat approved and all dedications shown hereon, accepted by the City Council of the City of Wichita, Kansas, this 29th day of JANUARY 1991.

_____ Mayor
Bob Knight

_____ Deputy City Clerk
Pat Burnett

Entered on transfer record, this 2 day of [illegible] 1991.

_____ County Clerk
Don Wright

State of Kansas)
Sedgwick County) SS This is to certify that this plat has been filed for record in the office of the Register of Deeds, this [illegible] day of [illegible] 19__, at [illegible] o'clock [illegible] M; and is duly recorded.

_____ Register of Deeds
Pat Kettler

_____ Deputy
Ed Kehn

CLERK OF SEDGWICK COUNTY
SEDGWICK COUNTY
KANSAS

CHADSWORTH ADDITION

14/14

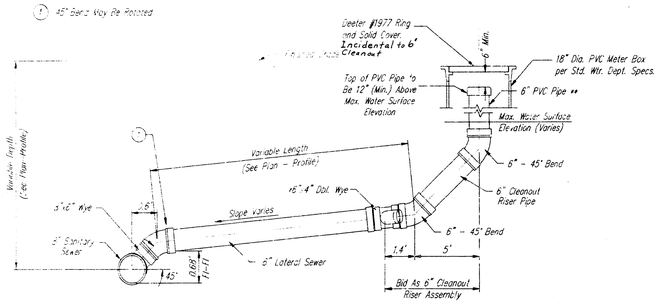

* 4" Branch (each side) To Serve as 4" Stub. Temporary Plug Until Service Connection is Required. Single Wye to be Used Where Indicated on Plan.

** 6" Lateral to be Air-Tested up to the Top of PVC Pipe, per Standard Specifications

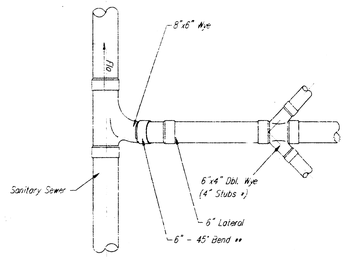

6" CLEANOUT RISER ASSEMBLY DETAIL
W/ WYE CONNECTION

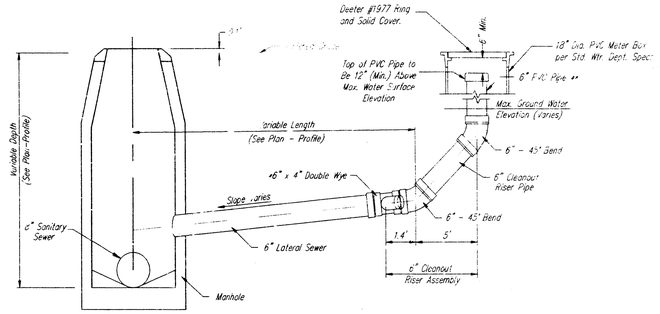

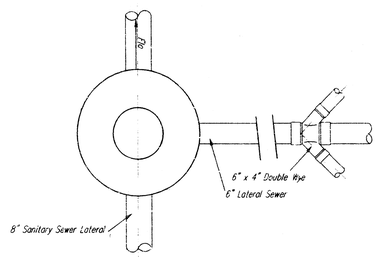

6" CLEANOUT RISER ASSEMBLY DETAIL
W/ MANHOLE CONNECTION

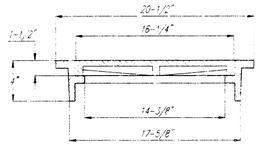

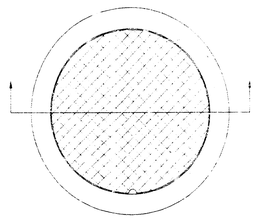

DEETER #1977 RING and SOLID COVER

CLEANOUT RISER ASSEMBLIES

BAUGHMAN COMPANY P. A.
ENGINEERING & SURVEYING

468-76-245-82093-000-000-001

13
14

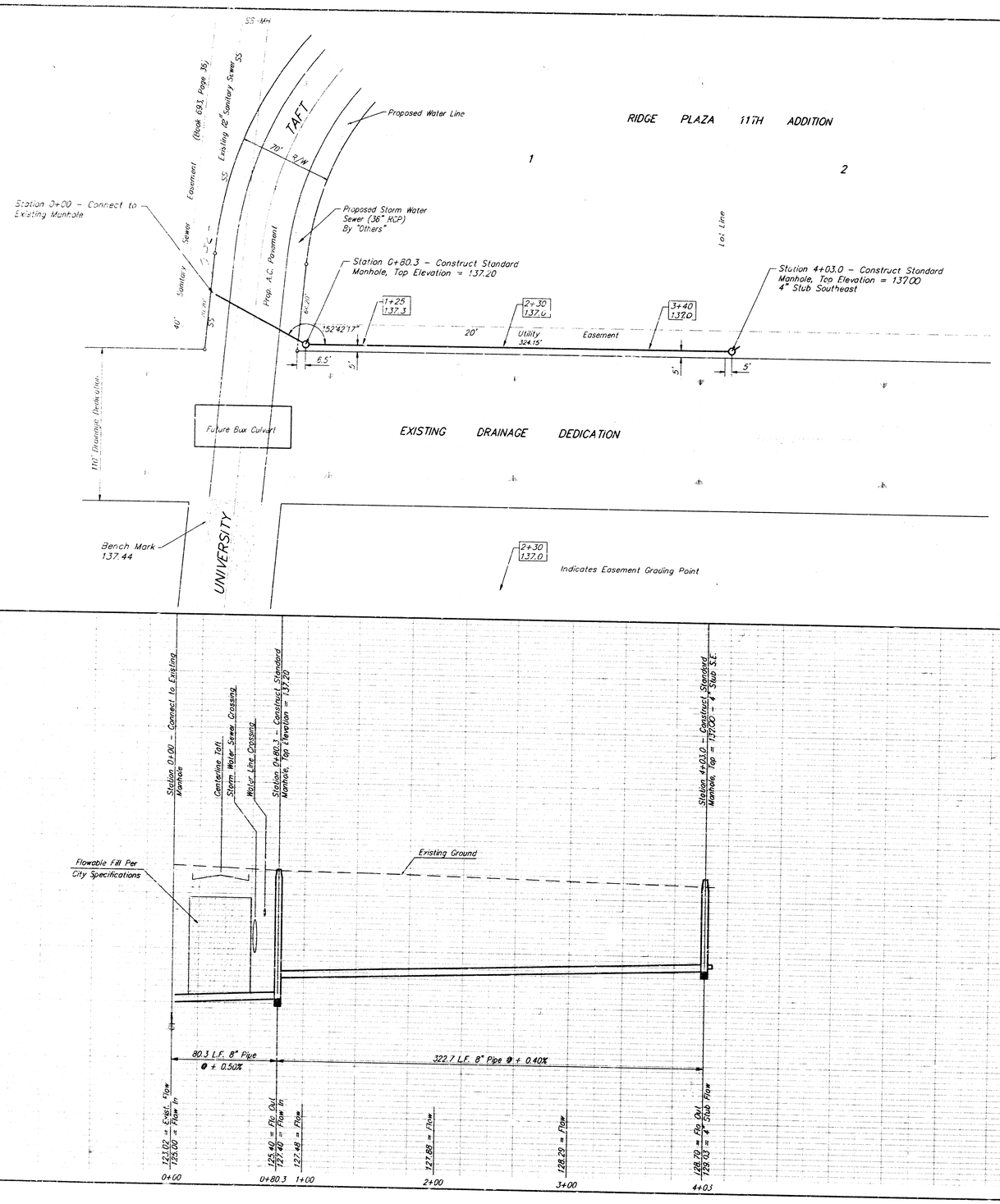

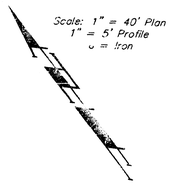

Scale: 1" = 40' Plan
1" = 5' Profile
o = Iron

Bench Mark: Square Cut In Top of Curb Located At The N.E. Corner Of The Intersection of Mid-Continent And Taft, Corner Of Parking Lot Curb Elevation = 140.25 City Datum

Bench Mark: Square Cut In Top of Curb Located 13' West of the N.W. Corner of the Intersection of University and the Drainage Dedication (Shown on Plan) Elevation = 137.44

LATERAL 51 - MAIN 4 - S.W.
RIDGE PLAZA 11TH ADDITION

BAUGHMAN COMPANY P. A.
ENGINEERING & SURVEYING
316/262-7271 • 315 ELLIS • WICHITA, KANSAS 67211

REV.

PROJECT NUMBER
468-76-245-82130-000-000-001

SHEET 2 OF 3

DESIGN	DRAWN	APPROVED	DATE	SCALE
C. Bohm	C. Bohm		June, 1991	Noted

PC22-8

RIDGE PLAZA 11TH ADDITION

WICHITA, SEDGWICK COUNTY, KANSAS

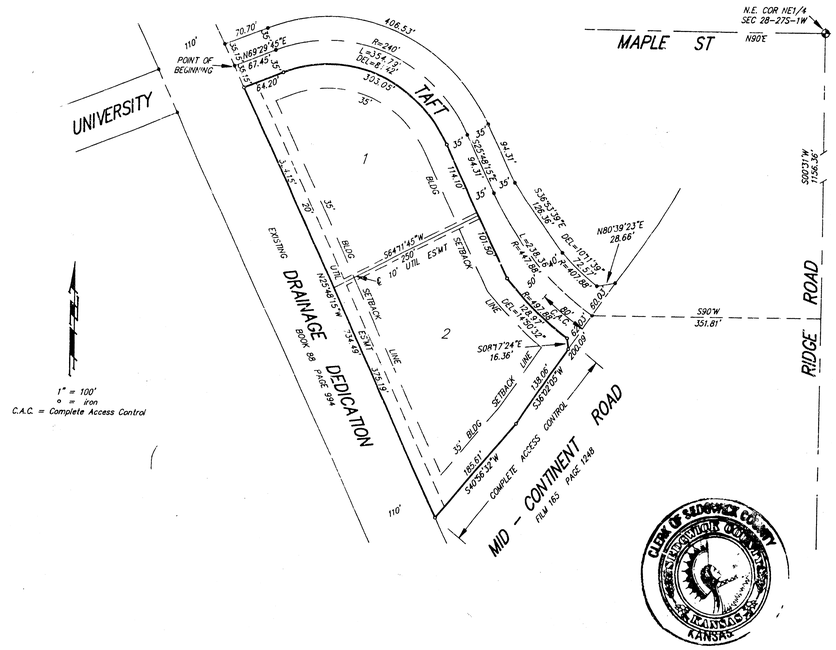

State of Kansas)
Sedgwick County) SS We, Baughman Company, P.A., Surveyors in aforesaid county and state do hereby certify that have surveyed and platted "RIDGE PLAZA 11TH ADDITION", Wichita, Sedgwick County, Kansas and that the accompanying plat is a true and correct exhibit of the property surveyed described as all that part of the NE1/4 of Sec. 28, Twp. 27-S, R-1-W of the 6th P.M., Sedgwick County, Kansas, commencing at a point on the north line of said NE1/4, said point being 1097 feet west of the N.E. Corner thereof; thence southerly along the east line of the drainage dedication as recorded in Book 88, Page 994, and being parallel with the east line of said NE1/4, 138.61 feet to the P.C. of a curve to the left with a radius of 1228.04 feet and a central angle of 26°19'15"; thence southeasterly along said curve, 564.14 feet to the P.T. of said curve; thence southeasterly, tangent to said curve, 125.33 feet to the point of beginning; thence easterly, with a deflection angle to the left of 84°42', 67.45 feet to the P.C. of a curve to the right with a radius of 240 feet and a central angle of 84°42'; thence southeasterly along said curve, 354.79 feet to the P.T. of said curve; thence southeasterly, tangent to said curve, 94.31 feet to the P.C. of a curve to the left with a radius of 447.88 feet and a central angle of 30°29'30"; thence southeasterly along said curve, 238.35 feet to the west line of Mid-Continent Road as recorded on Film 165, Page 1248; thence southwesterly, along said west line to the east line of the drainage dedication as recorded in Book 88, Page 994; thence northwesterly, along said east line to the point of beginning.

Existing easements and dedications being vacated by virtue of K.S.A. 12-512(b).

Baughman Company, P.A.

Date 20 May 1991

Mark A. Savoy Surveyor
Mark A. Savoy

MARK A. SAVOY
REGISTERED
LS-708

Know all men by these presents that we, the undersigned, have caused the land described in the surveyors certificate to be platted into Lots and a street to be known as "RIDGE PLAZA 11TH ADDITION", Wichita, Sedgwick County, Kansas. The utility easement is hereby granted for the construction and maintenance of all public utilities. The street is hereby dedicated to and for the use of the public. All abutters rights of access to or from Mid-Continent Road over and across the southeasterly line of Lot 2 and to or from Taft over and across the southeasterly 80 feet of the northeasterly line of Lot 2 are hereby granted to the City of Wichita, Kansas.

Bowen H. Brady
Bowen H. Brady

1145479

State of Kansas)
Sedgwick County) SS The foregoing instrument acknowledged before me, this 20th day of May 1991, by Bowen H. Brady

Mildred E. Franz Notary Public
My App't. Exp. 2-3-95 Mildred E. Franz

This plat of "RIDGE PLAZA 11TH ADDITION", Wichita, Sedgwick County, Kansas has been submitted to and approved by the Wichita-Sedgwick County Metropolitan Area Planning Commission, Wichita, Kansas.
Dated this 25th day of April 1991.

Wichita-Sedgwick County Metropolitan Area Planning Commission

George D. Sherman Chairman
George D. Sherman

Marvin S. Krout Secretary
Marvin S. Krout

This plat approved and all dedications shown hereon accepted by the City Council of the City of Wichita, Kansas, this 2nd day of July 1991.

Bob Knight Mayor
Bob Knight

Pat Burnett Deputy City Clerk
Pat Burnett

Entered on transfer record this 9th day of July 1991.

Don Wright County Clerk
Don Wright

State of Kansas)
Sedgwick County) SS This is to certify that this plat has been filed for record in the office of the Register of Deeds, this 9TH day of JULY 1991, at [illegible] o'clock P.M; and is duly recorded.

Pat Kettler Register of Deeds
Pat Kettler

Ed Resa Deputy
Ed Resa

We, the undersigned, holders of a mortgage on the above described property do hereby consent to this plat of "RIDGE PLAZA 11TH ADDITION", Wichita, Sedgwick County, Kansas.

First National Bank in Wichita

John W. Long V.P. + Cashier
John W. Long

RIDGE PLAZA 11th ADDITION

Project no. 468-76-245-82130-000-000-001

State of Kansas)
Sedgwick County) The foregoing instrument acknowledged before me, this 29 day of May 1991, by John W. Long, Vice President & Cashier of First National Bank in Wichita, on behalf of the corporation.

(3)