# SANITARY SEWER EXTENSION

TO SERVE

# PRAIRIE PARK 2ND ADDITION

## Lateral 5, Main 11, S.W.I. Sewer

Project Number

468-76-245-81107-000-000-001

CITY OF WICHITA

MICHAEL E. LINDEBAK CITY ENGINEER

Index Code

741785

## General Notes

1. Underground utility service lines and overhead utility pole lines are to be adjusted as necessary by others prior to construction unless the plans specifically call for their adjustment by the Contractor or unless the plans specifically identify a utility to be adjusted by its owner during construction. Existing utilities and their location, as shown on the plans, represent the best information obtainable for design. The Contractor will be required to work around existing utilities within the right-of-way which do not conflict with proposed construction.

2. The Contractor shall be responsible for preserving property irons. The Contractor will be required to re-establish any property irons which are damaged or destroyed by his construction operations. Such irons shall be re-established by a licensed land surveyor in accordance with state laws.

3. All disturbed areas shall be seeded with rye-grass per city specs.

4. Contractor shall grade the sanitary sewer alignment to the profile and elevations shown on the easement grading plan. All costs for grading shall be subsidiary to the project.

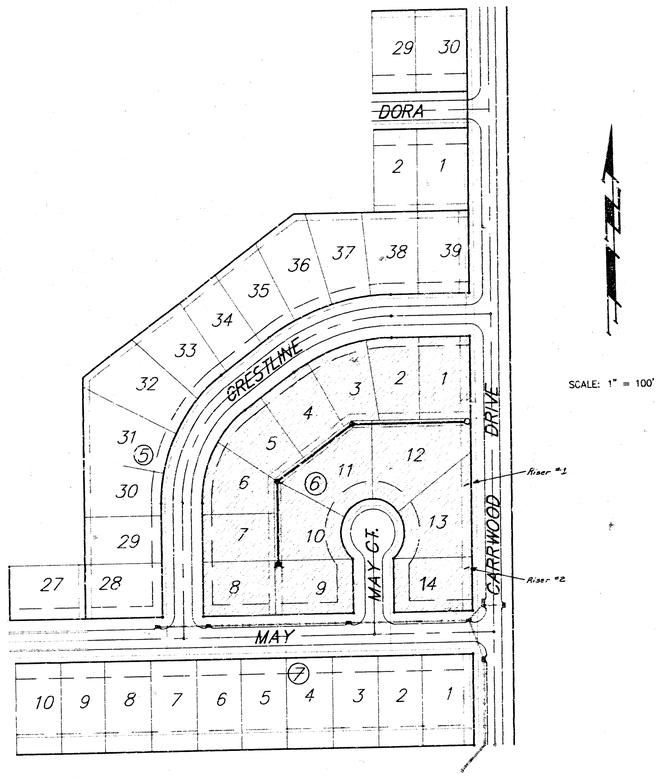


## Benchmarks:

BM#1. "□" Cut on top of curb approx. 10' W and 15' S of SW corner of Lot 28, Blk 5, Prairie Park 2nd Addition. Elev. = 131.24 City Datum

BM#2. "□" Cut on top of curb approx. 10' N and 15' E of the NE corner of Lot 39, Blk 5, Prairie Park 2nd Addition. Elev. = 131.62 City Datum

## Index of Sheets


| | |
|---|---|
| Title Sheet | 1 |
| Plan/Profile | 2 |
| Typical Details | 3 |
| Plat of Prairie Park 2nd Addition | 4 |


Booked 9-1-94
JKB
As Per Plan

Benefit District -

BRENT WOOTEN LICENSED 8470 KANSAS PROFESSIONAL ENGINEER

1/4

BAUGHMAN COMPANY P. A.
ENGINEERING & SURVEYING
316/262-7271 • 315 ELLIS • WICHITA, KANSAS 67211

FILMED FROM THE BEST AVAILABLE COPY.

**Benchmark:**

"□" Cut on top of curb located approx. 10' W and 15' S of SW corner of Lot 28, Blk 5, Prairie Park 2nd Addition. Elev=1.31.24 (city datum)

"□" Cut on top of curb approx. 10' N and 15' E of NE corner of Lot 39, Blk 5, Prairie Park 2nd Addition. Elev=1.31.62 (city datum)

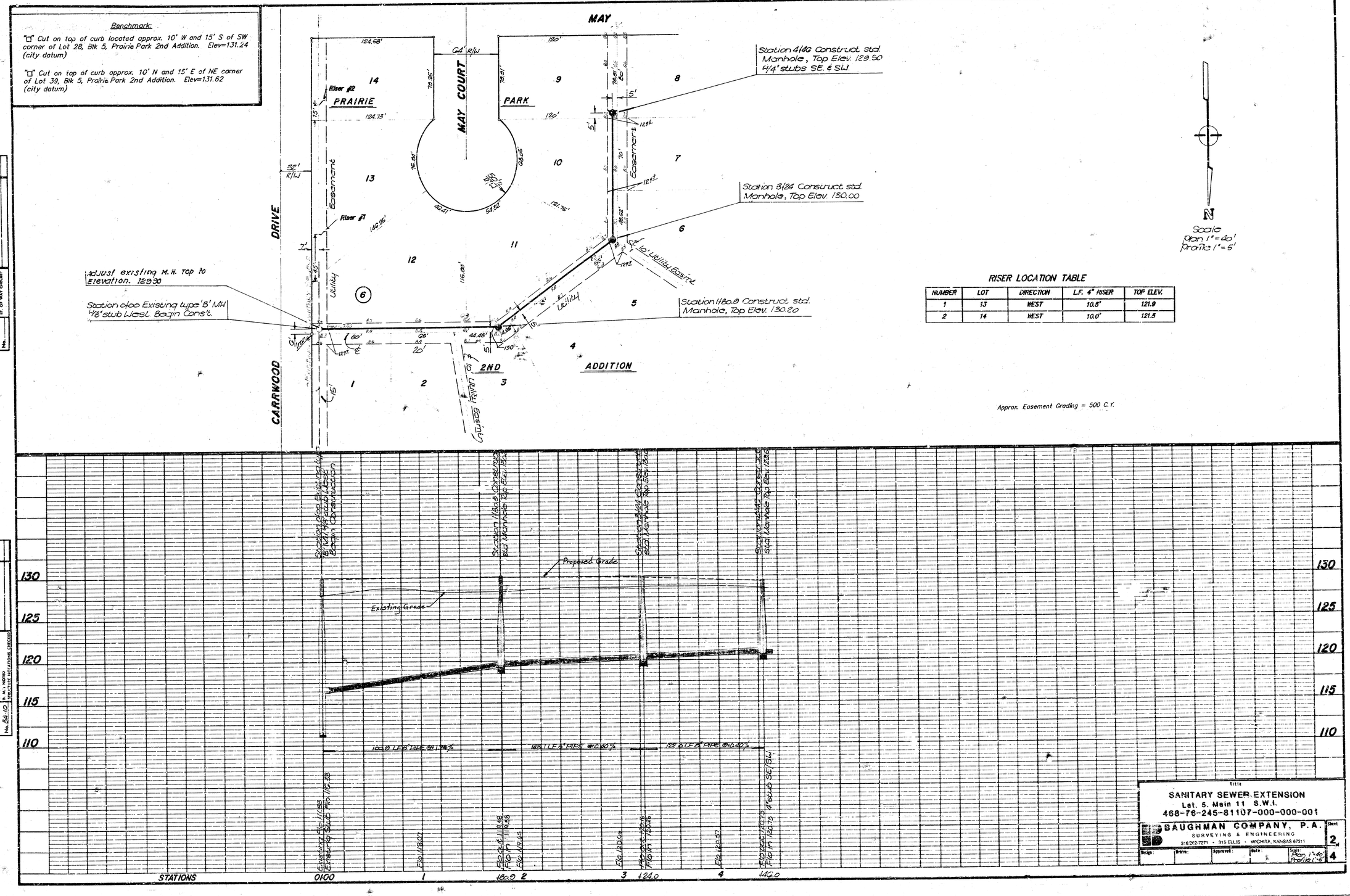


N

Scale
plan 1" = 40'
profile 1" = 5'

**RISER LOCATION TABLE**

| NUMBER | LOT | DIRECTION | L.F. 4" RISER | TOP ELEV. |
|---|---|---|---|---|
| 1 | 13 | WEST | 10.5' | 121.9 |
| 2 | 14 | WEST | 10.0' | 121.5 |

Approx. Easement Grading = 500 C.Y.

PLAN — SURVEYED / PLOTTED / NOTE BOOK / No. — CHECKED BY: C.L. OF WAY CHECKED

PROFILE — SURVEYED / PLOTTED / NOTE BOOK / No. 84-10 — CHECKED BY: C.L. NOTED / STRUCTURE NOTATIONS CHECKED

DATE: 8-6-84 / 8-17-84 — BY: S.E.P. SMALL

Title
SANITARY SEWER EXTENSION
Lat. 5, Main 11 S.W.I.
468-76-245-81107-000-000-001

BAUGHMAN COMPANY, P.A.
SURVEYING & ENGINEERING
316 262-7271 • 315 ELLIS • WICHITA, KANSAS 67211

Sheet 2 of 4

Design: | Drawn: | Approved: | Date: | Scale: Plan 1"=40' Profile 1"=5'

# SEWER APPURTENANCES DETAILS

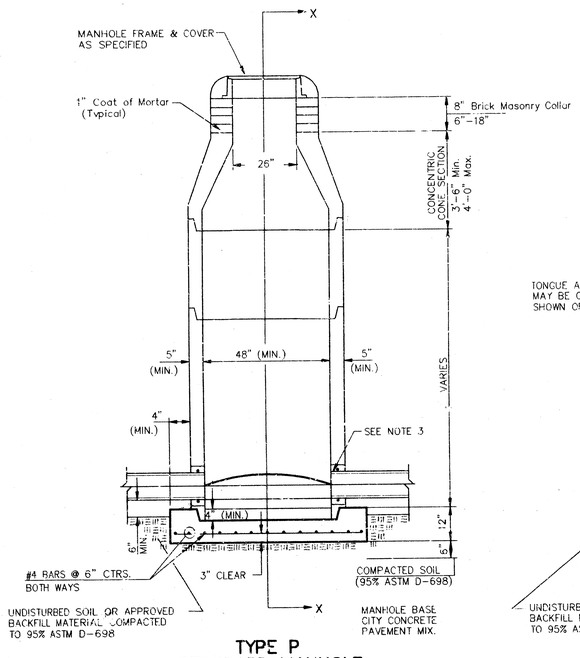


## TYPE P STANDARD MANHOLE

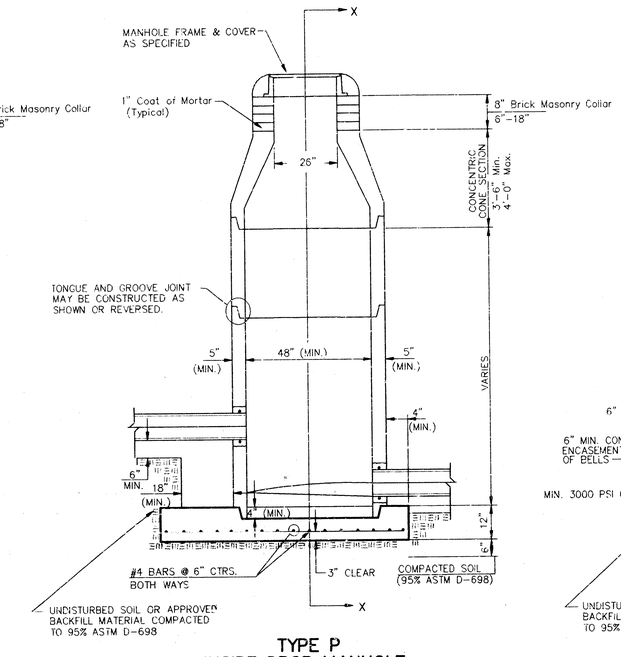


## TYPE P INSIDE DROP MANHOLE

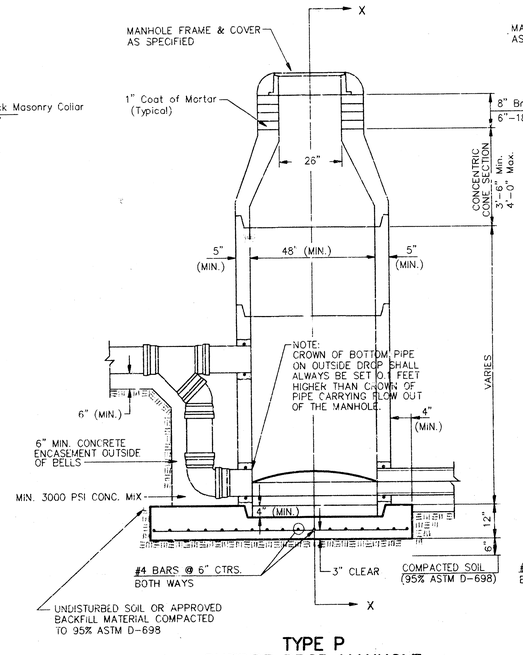


## TYPE P OUTSIDE DROP MANHOLE

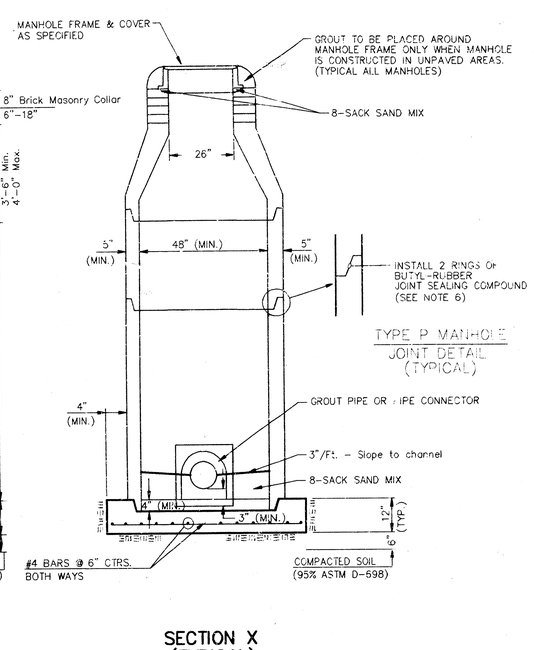


## SECTION X (TYPICAL)

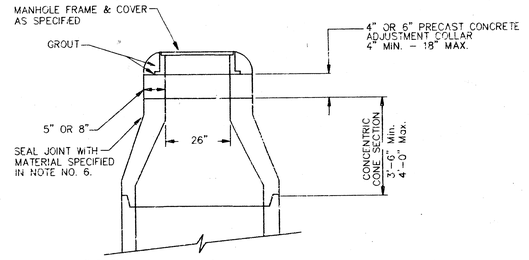


## ALTERNATE CONSTRUCTION IN UNPAVED AREAS

### GENERAL NOTES

### PRECAST MANHOLE NOTES

1. ALL PRECAST CONCRETE MANHOLE SECTIONS SHALL CONFORM TO THE LATEST REVISIONS OF A.S.T.M. C478 AS MODIFIED BY THE SPECIFICATIONS.
2. NON-SHRINK GROUT SHALL BE NON-METALLIC TYPE.
3. APPROVED FLEXIBLE WATERSTOP GASKETS SHALL BE INSTALLED TO JOIN THE SEWER TO THE MANHOLE WALL WHEN A.B.S. COMPOSITE PIPE OR P.V.C. PIPE IS USED. FOR OTHER TYPES OF PIPE THE SEWER SHALL BE GROUTED IN PLACE WITH NON-SHRINK GROUT. THE SEWER PIPE SHALL BE SUPPORTED WITH CONCRETE ENCASEMENT A MINIMUM OF 3 FEET FROM THE MANHOLE WALL AND TO THE FIRST JOINT FOR V.C.P. SUCH THAT THE JOINT REMAINS FLEXIBLE.
4. ALL INSIDE SURFACES OF THE CONCRETE MANHOLE WHICH WOULD BE EXPOSED TO SEWER GAS SHALL BE COATED WITH 2 COATS TNEMEC SERIES 66 HI-BUILD EPOXOLINE, DRY THICKNESS OF 3 MILS (MIN.)
5. EXTERIOR MANHOLE WALLS SHALL BE COATED WITH 1 COAT MOBILARMA 633 BITUMINOUS COATING.
6. JOINT SEALING COMPOUND SHALL BE KENT SEAL NO. 2 OR APPROVED EQUAL.
7. PRECAST MANHOLES SHALL BE SET AT LEAST 4 INCHES INTO THE MANHOLE BASE.
8. TOP OF MANHOLE FLOOR SLAB SHALL BE AT LEAST 3 INCHES BELOW THE FLOW LINE OF THE OUTLET PIPE TO INSURE SUFFICIENT MINIMUM THICKNESS OF SHAPED INVERT.
9. LIFTING HOLES SHALL BE FILLED WITH NON-SHRINK GROUT AND THE INTERIOR SURFACE COATED AS SPECIFIED.
10. MORTAR USED IN MASONRY CONSTRUCTION SHALL CONTAIN 8 SACKS OF CEMENT PER CUBIC YARD. CONCRETE USED IN MANHOLE BASES SHALL CONFORM TO THE REQUIREMENTS OF CONCRETE FOR CONCRETE PAVEMENT CONSTRUCTION AS SPECIFIED IN THE CITY STANDARD PAVING SPECIFICATIONS USING CITY CONCRETE PAVEMENT MIX WITHOUT AIR ENTRAINING ADMIXTURE. MORTAR SHALL BE PLACED AROUND THE MANHOLE RING AS SHOWN ON THE DRAWINGS WHEN MANHOLES ARE CONSTRUCTED IN UNPAVED AREAS. MANHOLES CONSTRUCTED WHERE PIPE SIZES ARE SMALLER THAN 24" SHALL HAVE AN INSIDE DIAMETER OF 4'. MANHOLES CONSTRUCTED WHERE PIPE SIZES ARE 24" OR LARGER SHALL HAVE AN INSIDE DIAMETER OF 5'. COMPLETED MANHOLE SHALL BE WITHOUT LEAKS AND WATER TIGHT.
11. REINFORCING STEEL SHALL BE INSTALLED IN THE MANHOLE BASES AND SHALL CONSIST OF NO. 4 BARS PLACED ON 6" CENTERS IN BOTH DIRECTIONS. THE MANHOLE BASE REINFORCEMENT SHALL BE PLACED AT LEAST 3" ABOVE THE BOTTOM OF THE MANHOLE BASE. ALL COSTS FOR FURNISHING AND INSTALLING REINFORCING STEEL SHALL BE INCLUDED IN THE UNIT PRICE BID FOR THE MANHOLE.
12. OPENINGS SHALL BE CUT INTO THE MANHOLE WALL WHEN OUTSIDE DROPS ARE CONSTRUCTED ON EXISTING MANHOLES. SUCH OPENINGS CUT INTO EXISTING MANHOLES SHALL BE AS SMALL AS PRACTICAL TO FACILITATE INSTALLING AND GROUTING THE NEW PIPE IN PLACE. WATERSTOP GASKETS SHALL BE USED WITH P.V.C. AND A.B.S. COMPOSITE PIPE. THE NEW PIPE SHALL BE GROUTED INTO THE OPENING USING AN APPROVED NONSHRINK GROUT FOR THE FULL MANHOLE WALL THICKNESS. THE EXTERIOR OF THE COMPLETED CONNECTION SHALL BE SEALED WITH AN APPROVED BITUMINOUS COATING SUCH THAT THE CONNECTION WILL BE WATER TIGHT. FLOOR OF MANHOLE SHALL BE MODIFIED TO FORM NEW FLOW CHANNEL FOR THE NEW CONNECTION AS INDICATED BY THE DRAWING. THIS WORK, INCLUDING MODIFICATION OF MANHOLE FLOOR, SHALL BE PAID FOR AT THE UNIT PRICE BID FOR OUTSIDE DROP STACK CONSTRUCTED ON EXISTING MANHOLE.
13. THE FLOORS OF ALL MANHOLES SHALL BE SHAPED WITH FLOW CHANNELS SUCH THAT THE MANHOLES WILL BE SELF CLEANING AND FREE OF AREAS WHERE SOLIDS COULD BE DEPOSITED AS SEWAGE FLOWS THROUGH THE MANHOLE FROM ALL INLET PIPES TO THE OUTLET PIPE. FLOW CHANNELS SHALL BE FORMED TO MATCH THE BOTTOM HALVES OF THE INFLOWING PIPES AND THE OUTFLOWING PIPE AS SHOWN BY THE DRAWINGS EXCEPT FOR INSIDE DROP MANHOLES. FLOW CHANNELS FOR INSIDE DROP MANHOLES SHALL BE CONSTRUCTED AS INDICATED BY THE DRAWING. MANHOLE FLOORS SHALL HAVE SLOPES OF 3 INCHES PER FOOT IN THE AREAS OUTSIDE OF THE FLOW CHANNELS SLOPED TOWARD THE FLOW CHANNELS. PIPES LAID THROUGH MANHOLES SHALL HAVE THE TOP HALF REMOVED TO NEAT LINES FOR THE FULL INSIDE DIAMETER OF THE MANHOLE. MANHOLE FLOORS SHALL THEN BE SHAPED AROUND THE BOTTOM HALF OF THE PIPE WHICH FORMS THE FLOW CHANNEL.
14. PIPES INSTALLED WITHIN THE EXCAVATION MADE FOR THE MANHOLE SHALL BE CRADLED WITH CONCRETE TO THE LIMITS OF THE MANHOLE EXCAVATION. WHEN CLAY PIPE IS USED, THE CRADLE SHALL EXTEND TO THE FIRST JOINT OUTSIDE THE MANHOLE. THE CRADLE SHALL BE TERMINATED AT THE CLAY PIPE JOINT IN A MANNER WHICH WILL MAINTAIN THE FLEXIBILITY OF THE JOINT. COST OF CRADLE WITHIN MANHOLE EXCAVATION OR TO CLAY PIPE JOINTS ADJACENT TO MANHOLE SHALL BE INCLUDED IN THE UNIT PRICE BID FOR THE MANHOLE.
15. MANHOLE COVER CASTINGS AND MANHOLE FRAME CASTINGS SHALL CONFORM TO THE REQUIREMENTS AS INDICATED IN THE STANDARD SPECIFICATIONS AND AS SHOWN IN THE STANDARD DETAIL DRAWING.
16. THE VERTICAL DROP IN INSIDE DROP MANHOLES SHALL NOT EXCEED 2' FOR INFLOWING PIPES SIZED 12" OR SMALLER AND 2' FOR INFLOWING PIPES LARGER THAN 12". THE CROWNS OF INFLOWING PIPES SHALL NEVER BE SET LOWER THAN THE CROWN OF THE OUTFLOWING PIPE.
17. STANDARD MANHOLES AND STANDARD INSIDE DROP MANHOLES SHALL BE BID AS STANDARD MANHOLES FOR THE TYPE AND DIAMETER INDICATED. OUTSIDE DROP MANHOLES SHALL BE BID AS STANDARD OUTSIDE DROP MANHOLES FOR THE TYPE AND DIAMETER INDICATED. ALL MANHOLE DIAMETERS WILL BE 4' UNLESS INDICATED OTHERWISE.
18. A BRICK MASONRY COLLAR SHALL BE INSTALLED BETWEEN THE CAST IRON FRAME AND THE CONCENTRIC CONE. THE COLLAR WILL HAVE 8" WALLS AND A VERTICAL HEIGHT OF 6" MINIMUM AND 18" MAXIMUM. A 1" COAT OF MORTAR WILL BE PLASTERED ON THE OUTSIDE OF THE COLLAR. THE USE OF PRE-CAST CONCRETE SPACERS FOR MANHOLE TOP ADJUSTMENT IS ALSO ALLOWED.

CITY OF WICHITA, KANSAS
STANDARD MANHOLE DETAILS
SEWER APPURTENANCES DETAILS

BAUGHMAN COMPANY P. A.
ENGINEERING & SURVEYING
316/262-7271 • 315 ELLIS • WICHITA, KANSAS 67211

REV. NOV. 1993

PROJECT NUMBER 468-76-245--81107-000-000-001

SHEET 3 OF 4

| DESIGN | DRAWN | APPROVED | DATE | SCALE |
|---|---|---|---|---|
| | | | | |

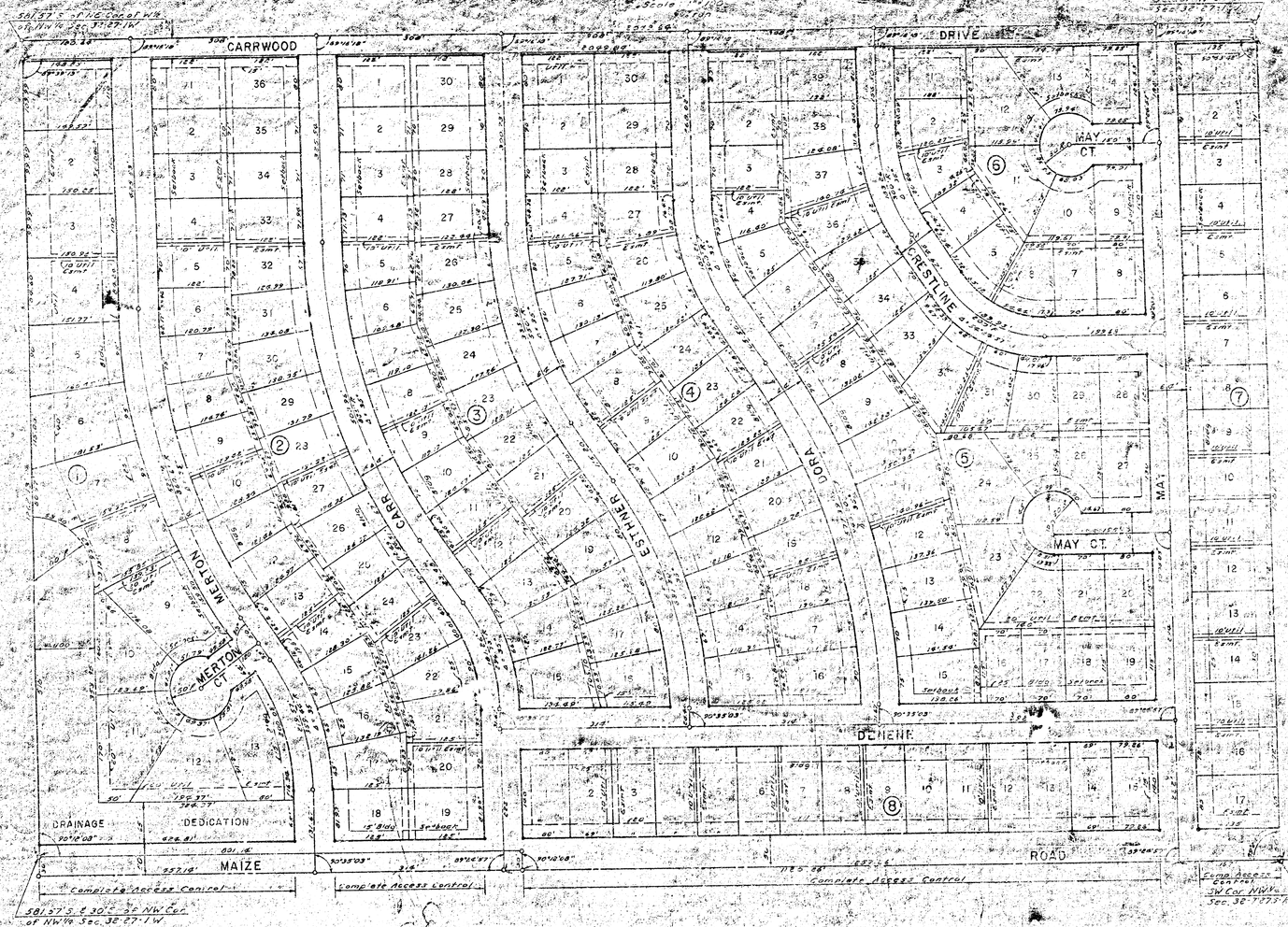


# PRAIRIE PARK 2ND ADDITION

WICHITA, KANSAS

This plat of "PRAIRIE PARK 2ND ADDITION", Wichita, Kansas, has been submitted to and approved by the Wichita-Sedgwick County Metropolitan Area Planning Commission, Wichita, Kansas Dated this 2nd day of March, 1978

Wichita-Sedgwick County Metropolitan Area Planning Commission

Marjorie L. Taylor — Chairman
Robert A. Lakin — Secretary

This plat approved and all dedications shown hereon accepted by the Board of City Commissioners Wichita, Kansas, this 27th day of MARCH, 1979

Connie A. Peters — Mayor
Donald C. Gisick — City Clerk

This plat approved and all dedications shown hereon accepted by the Board of County Commissioners, Sedgwick County, Kansas, this 4 day of April, 1979.

Tom Scott — Chairman
Everett Parrish — Commissioner
Donald E. Gregg — Commissioner
Dorothy K. White — County Clerk

Entered on transfer record this ___ day of ___, 1979.

Dorothy K. White — County Clerk

State of Kansas } S.S.
Sedgwick County } This is to certify that this plat has been filed for record in the Office of the Register of Deeds this 4TH day of APRIL, 1979 at 10:00 o'clock A. M., and is duly recorded.

Bette F. McCart — Register of Deeds
Pat Kettler — Deputy

State of Kansas } S.S.
Sedgwick County } We, Boughman Company, Surveyors in aforesaid county and state do hereby certify that we have surveyed and platted "PRAIRIE PARK 2ND ADDITION", Wichita, Kansas, and that the accompanying plat is a true and correct exhibit of the property surveyed, described as follows: Beginning at the SW corner of the NW¼ of Section 32, T27S, R1W, Sedgwick County, Kansas; thence northerly, along the west line of said NW¼, 1227.26 feet to a point 1382.71 feet south of the NW corner of said NW¼; thence easterly parallel with the north line of said NW¼, 30 feet; thence northerly, parallel with the west line of said NW¼, 801.14 feet to a point 581.57 feet south of the north line of said NW¼; thence easterly, parallel with the north line of said NW¼, 1262.13 feet to a point 30 feet west of the east line of the W½ of said NW¼; thence southerly, parallel with said east line, 2049.64 feet to the south line of said NW¼; thence westerly, along said south line, 1287.03 feet to the point of beginning.

Date 2-27-79 — Boughman Company
William L. Kerber — Surveyor

Know all men by these presents that we, the undersigned, have caused the land described in the surveyors certificate to be platted into lots, blocks, streets and a drainage dedication to be known as "PRAIRIE PARK 2ND ADDITION", Wichita, Kansas. The easements are hereby granted as indicated for the construction and maintenance of public utilities. The drainage dedication is hereby dedicated for drainage purposes. The streets are hereby dedicated to and for the use of the public. All abutters rights of access over and across the east line of Maize Road are hereby granted to the City of Wichita, Kansas.

Pate Construction Co., Inc. — Carmen H. Pate, Jr. — Vice Pres.
John Lee Paul

State of Kansas } S.S.
Sedgwick County } The foregoing instrument was acknowledged before me this 4th day of January, 1979, by John Lee Paul and Pate Construction Co., Inc., by Carmen H. Pate, Jr., Vice Pres. In testimony whereof I have hereunto set my hand and affixed my notarial seal the day and year above written.

Mark A. Savoy — Notary Public
My Commission Expires 4/14/80

We, the undersigned, holders of a mortgage on the above described property do hereby consent to this plat of "PRAIRIE PARK 2ND ADDITION"

Howard J. Hake — Edna Ruby Hake
Edwin Dale Carr — Leola D. Carr
Walter Palmer — Josephine Palmer
George Richard Carr

State of Kansas } S.S.
Sedgwick County } The foregoing instrument was acknowledged before me this 4th day of January, 1979, by Howard J. Hake and Edna Ruby Hake, his wife, and Walter Palmer and Josephine Palmer, his wife, and George Richard Carr. In testimony whereof I have hereunto set my hand and affixed my notarial seal the day and year above written.

Mark A. Savoy — Notary Public
My Commission Expires 4/14/80

State of California } S.S.
Los Angeles County } The foregoing instrument was acknowledged before me this 3rd day of January, 1979, by Edwin Dale Carr and Leola D. Carr, his wife. In testimony whereof I have hereunto set my hand and affixed my notarial seal the day and year above written.

Kathleen Hittenberg — Notary Public
My Commission Expires Dec. 13, 1982

P-240

H-2-2-23

4

10-3-3-4