Lat. 21, Main 13, S.W.I.

SANITARY SEWER IMPROVEMENTS

to serve

HUNTER'S RIDGE ADDITION

CITY OF WICHITA, KANSAS

Michael E. Lindebak, P.E. City Engineer

Project Number

468-82971

Index Code:

743795

GENERAL NOTES:

1. Contractor will be required to provide notice to utility companies a minimum of twenty-four (24) hours prior to any excavation, as follows:

   Kansas One-Call 687-2470

   The Contractor must notify the following in case of an emergency.

Multimedia Cablevision	262-0661
K.P.L. Gas Service Company	383-8650
Kansas Gas & Electric Company	383-8600
Peoples Gas Company	942-8350
Southwestern Bell Telephone Company	1-571-2611
City of Wichita Water Dept.	268-4908
City of Wichita Traffic Engineering	269-4446

2. Underground utility service lines and overhead utility pole lines are to be adjusted as necessary by others prior to construction unless the plans specifically call for their adjustment by the Contractor or unless the plans specifically identify a utility to be adjusted by its owner during construction. Existing utilities and their location, as shown on the plans, represent the best information obtainable for design. The Contractor will be required to work around existing utilities within the right-of-way which do not conflict with proposed construction.

3. Trees and shrubs in public right-of-way which are in direct conflict with proposed new construction shall be removed by the Contractor with the Engineer's approval. Trees and shrubs which are not in direct conflict with proposed new construction shall be saved and protected from damage.

4. The Contractor shall give all property owners and/or tenants of developed property abutting the construction of this project a minimum of ten (10) days advance notice prior to start of construction.

5. The Contractor shall be responsible for preserving property irons. The Contractor will be required to re-establish any property irons which are damaged or destroyed by his construction operations. Such irons shall be re-established by a licensed land surveyor in accordance with state laws.

6. Contractor shall grade the sanitary sewer alignment to the profile and elevations shown on the easement grading plans. All costs for grading shall be paid as lump sum for easement grading.

7. All areas disturbed by construction operations shall by seeded with rye grass at a rate of 300 lbs/acre immediately following construction in that area. Prior to seeding, area shall be prepared per City specs.

8. The Contractor shall be responsible for maintaining continuous flow of sewage through construction. Contractor's proposed method for maintaining sewage flow shall be approved by the Engineer. Cost of maintaining flow of sewage through construction will not be paid for directly and this cost shall be considered as subsidiary to the other pay items of work.

9. **This project is subject to a current SWPP Plan. Contractor shall comply with any unusual requirements as necessary for site to be in compliance during construction.**

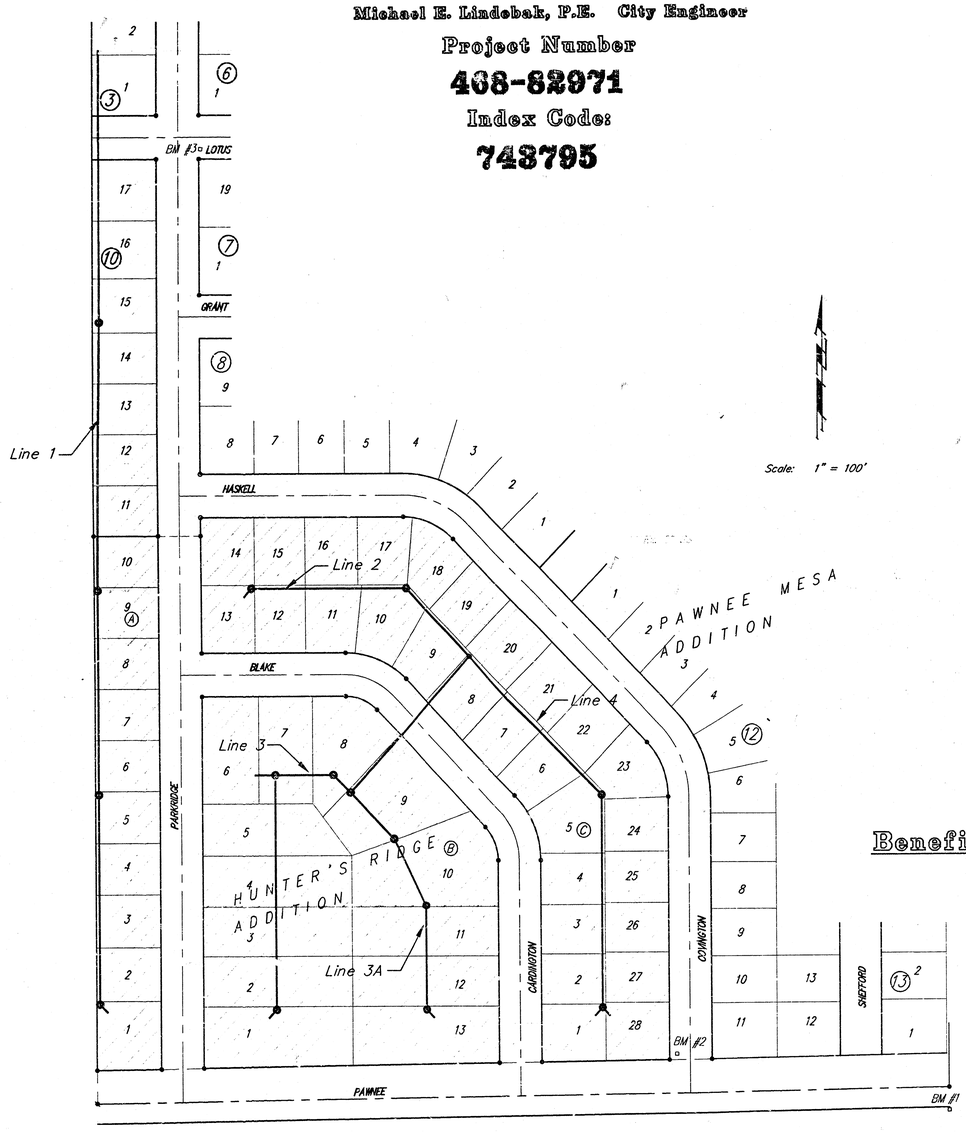

Scale: 1" = 100'

BENCHMARKS:

BM #1
C.O.W. Benchmark disc 1/2 mi. east and 34' south of C of Pawnee and 119th St. W. (6' West of hedge row)
Elev. = 145.50 (City Datum)

BM #2 "□" Cut on top of curb at the northwest corner of Pawnee & Covington on the north return.
Elev. = 145.70 (City Datum)

BM #3 "□" Cut on top of curb at the southeast corner of Lotus & Parkridge on the east return.
Elev. = 145.99 (City Datum)

SHEET INDEX:

1	Title Sheet
2-3	Line 1
4	Line 2 & 3A
5	Line 3
6	Line 4
7	Standard Manhole Detail
8	Standard Shallow Manhole Detail
9	Manhole Ring & Cover Detail
10	Riser Detail
11	Easement Grading Plan
12	Copy of Hunter's Ridge Add. Plat

Benefit District:

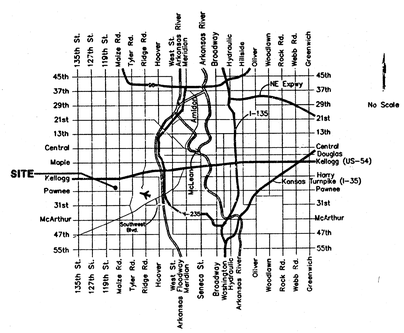

Vicinity Map

Booked
P-109
11-1-99
Per Plan
RDL



April 1999

BAUGHMAN COMPANY P.A.
ENGINEERING, SURVEYING, & PLANNING
316-262-7271 • 315 ELLIS • WICHITA, KANSAS 67211

BENCHMARK:
C.O.W. Benchmark disc 1/2 mi. east and 34' south of C of Pawnee and 119th St. W. (6' West of hedge row)
Elev. = 145.50 (City Datum)

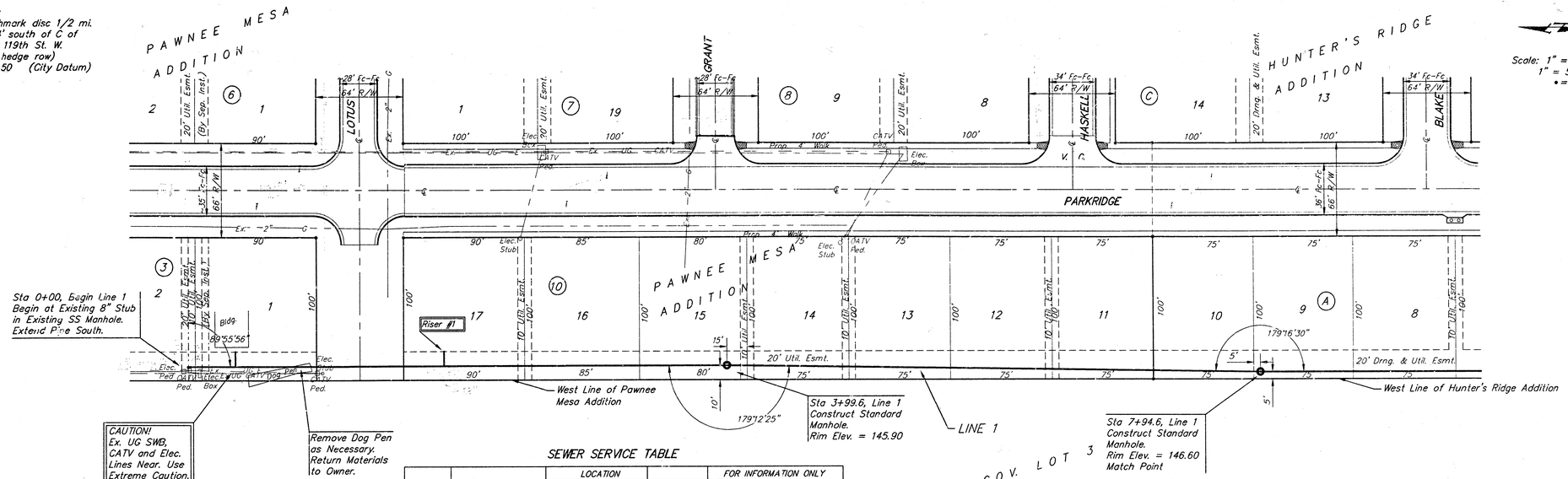

SEWER SERVICE TABLE

NUMBER	TYPE	LOCATION			STATION\ DIRECTION	FOR INFORMATION ONLY	
		LOT NO.	BLOCK NO.	LINE NO.		APPROXIMATE LENGTH 4" PIPE	
						VERTICAL	HORIZONTAL
1	8" X 4" Tee Saddle	17	10	1	1+90.0/Lt.	8.5'	10'

NOTE: Vertical Riser Pipe shall be extended to 2' minimum above ground water elevation and 4' maximum below proposed ground elevation.

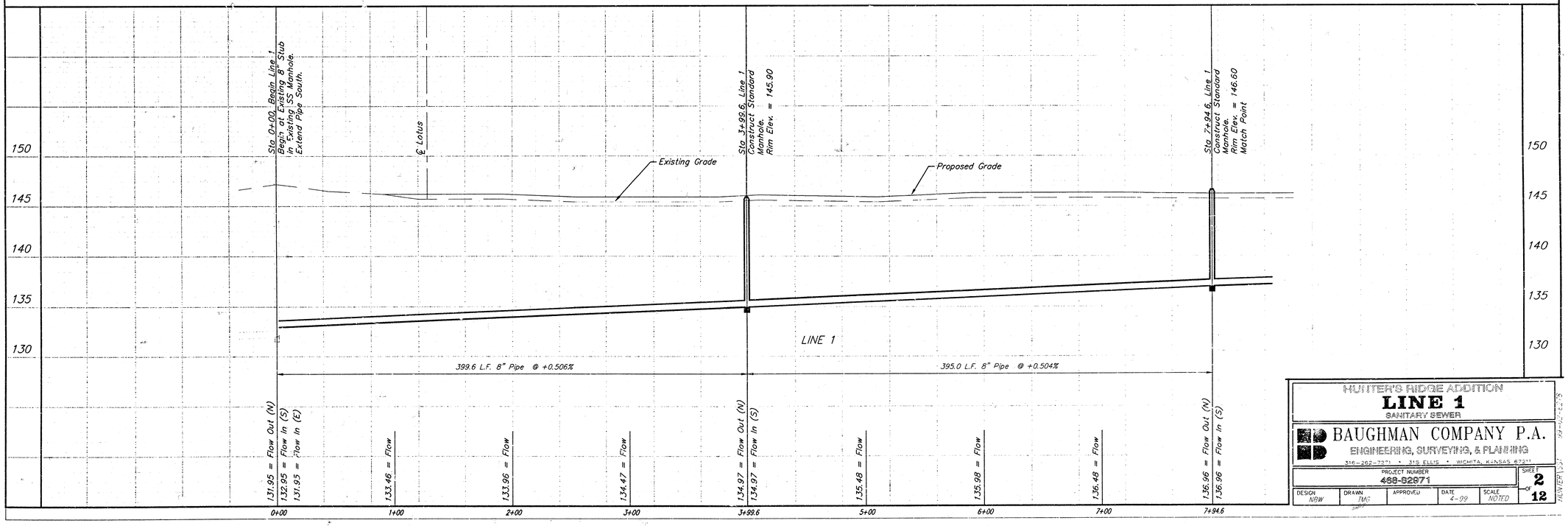

HUNTER'S RIDGE ADDITION
LINE 1
SANITARY SEWER

BAUGHMAN COMPANY P.A.
ENGINEERING, SURVEYING, & PLANNING
316-262-7271 • 315 ELLIS • WICHITA, KANSAS 67211

PROJECT NUMBER	SHEET
468-82971	2 OF 12

DESIGN	DRAWN	APPROVED	DATE	SCALE
NBW	TMG		4-99	NOTED

BENCHMARK:
C.O.W. Benchmark disc 1/2 mi. east and 34' south of C of Pawnee and 119th St. W. (6' West of hedge row)
Elev. = 145.50 (City Datum)

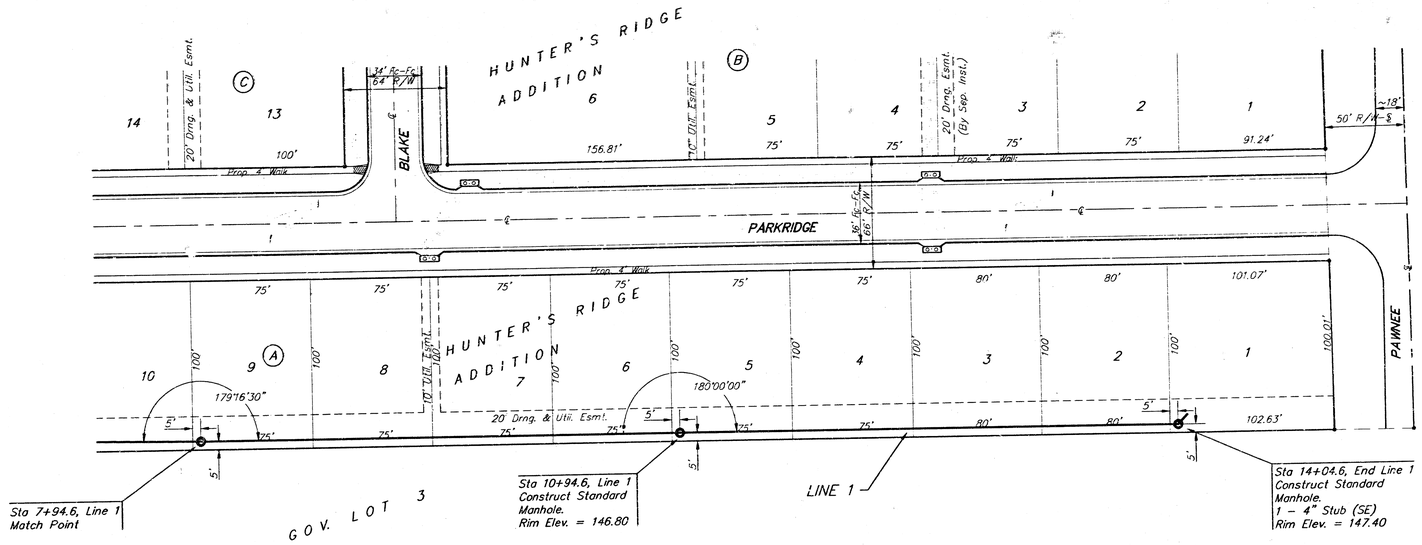

Scale: 1" = 40' Horizontal
1" = 5' Vertical
• = Iron

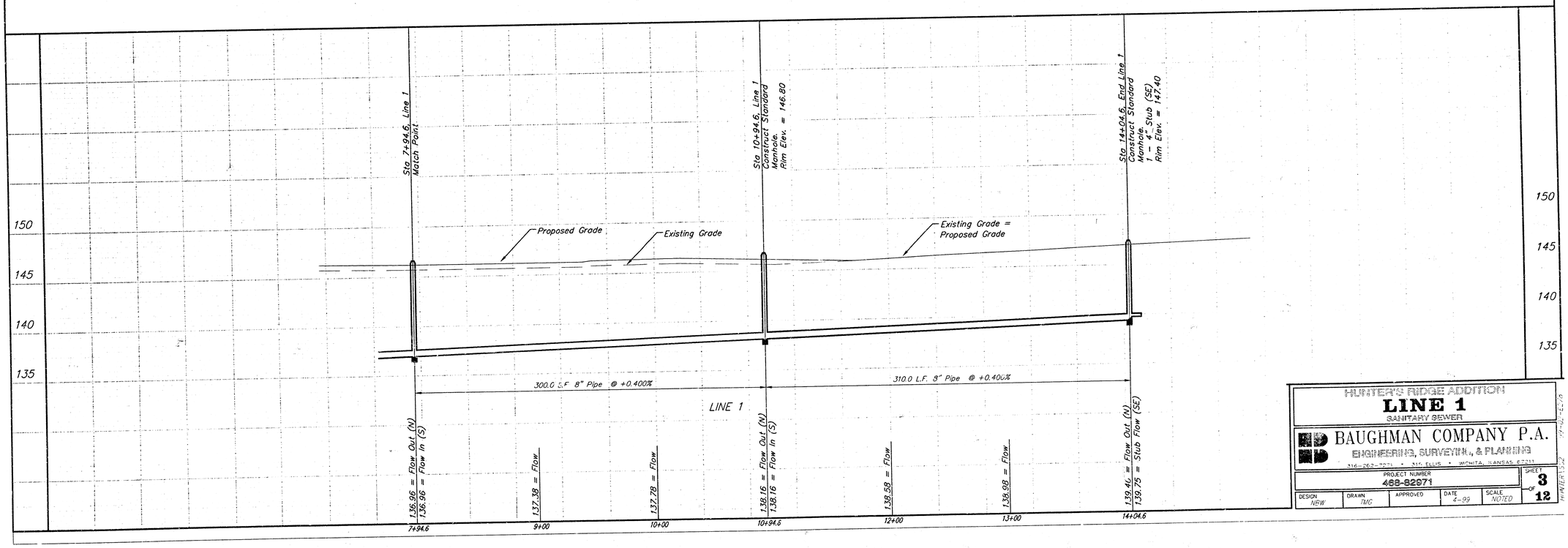

HUNTER'S RIDGE ADDITION
LINE 1
SANITARY SEWER

BAUGHMAN COMPANY P.A.
ENGINEERING, SURVEYING, & PLANNING
316-262-7271 • 315 ELLIS • WICHITA, KANSAS 67211

PROJECT NUMBER	SHEET
468-82971	3 OF 12

DESIGN	DRAWN	APPROVED	DATE	SCALE
NEW	TMC		4-99	NOTED

BENCHMARK:
C.O.W. Benchmark disc 1/2 mi. east and 34' south of C of Pawnee and 119th St. W. (6' West of hedge row)
Elev. = 145.50 (City Datum)

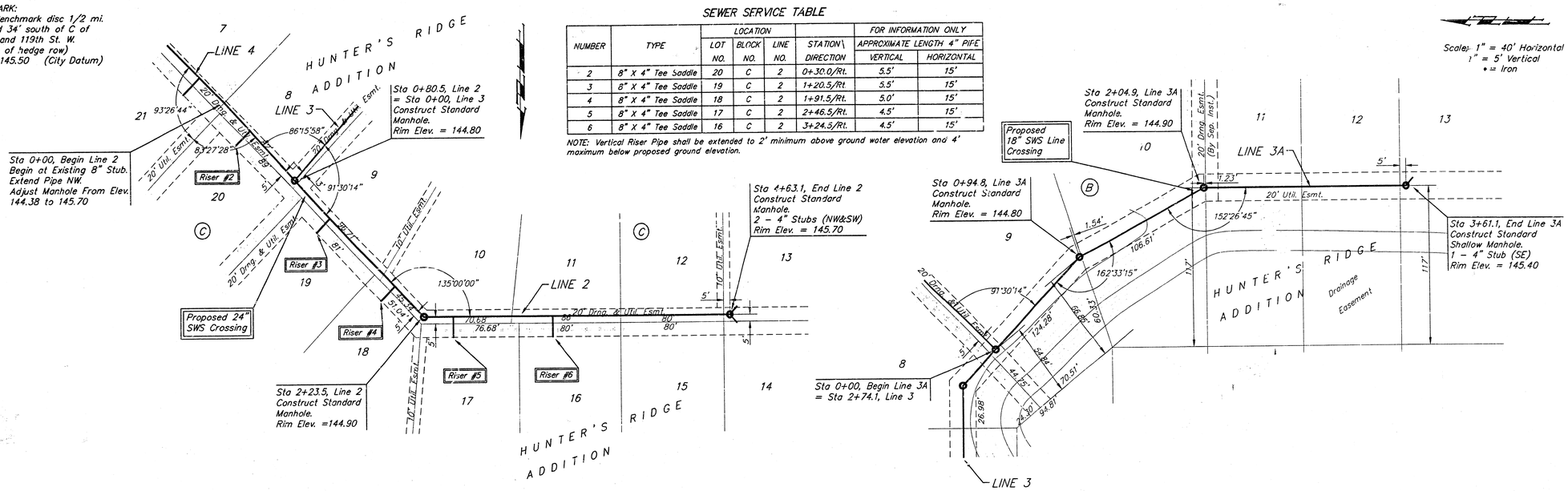

SEWER SERVICE TABLE

NUMBER	TYPE	LOCATION			STATION\ DIRECTION	FOR INFORMATION ONLY	
		LOT NO.	BLOCK NO.	LINE NO.		APPROXIMATE LENGTH 4" PIPE VERTICAL	HORIZONTAL
2	8" X 4" Tee Saddle	20	C	2	0+30.0/Rt.	5.5'	15'
3	8" X 4" Tee Saddle	19	C	2	1+20.5/Rt.	5.5'	15'
4	8" X 4" Tee Saddle	18	C	2	1+91.5/Rt.	5.0'	15'
5	8" X 4" Tee Saddle	17	C	2	2+46.5/Rt.	4.5'	15'
6	8" X 4" Tee Saddle	16	C	2	3+24.5/Rt.	4.5'	15'

NOTE: Vertical Riser Pipe shall be extended to 2' minimum above ground water elevation and 4' maximum below proposed ground elevation.

Scale: 1" = 40' Horizontal
1" = 5' Vertical
• = Iron

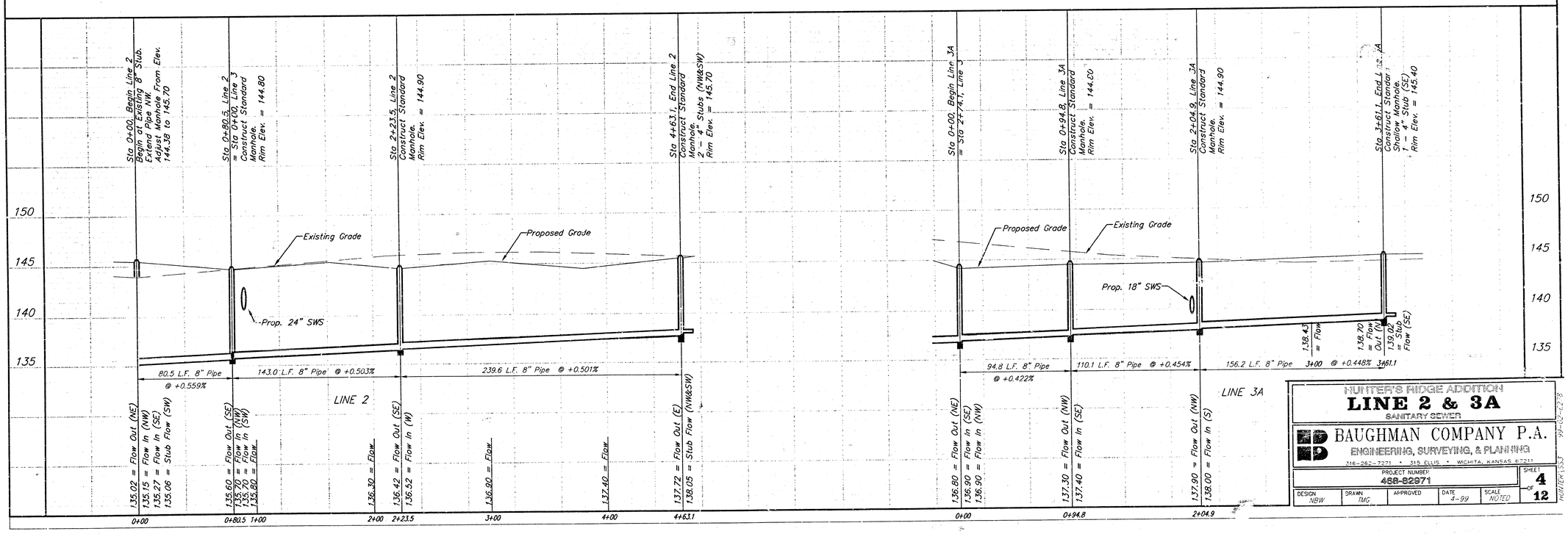

HUNTER'S RIDGE ADDITION
LINE 2 & 3A
SANITARY SEWER

BAUGHMAN COMPANY P.A.
ENGINEERING, SURVEYING, & PLANNING
316-262-7271 • 315 ELLIS • WICHITA, KANSAS 67211

PROJECT NUMBER	SHEET
468-82971	4 OF 12

DESIGN	DRAWN	APPROVED	DATE	SCALE
NBW	TMG		4-99	NOTED

99-02-428
HUNTER1553

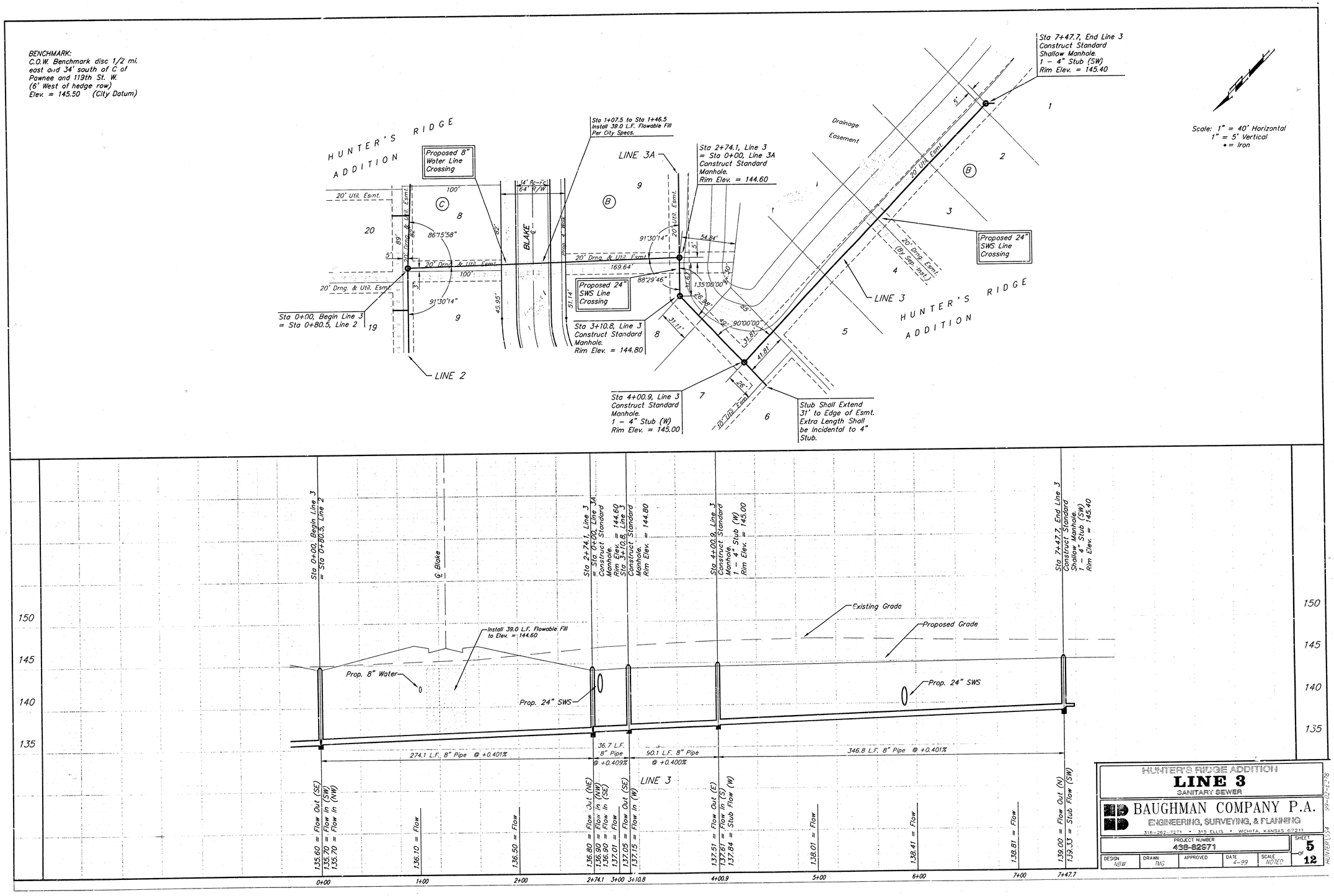

HUNTER'S RIDGE ADDITION

LINE 3

SANITARY SEWER

BAUGHMAN COMPANY P.A.

ENGINEERING, SURVEYING, & PLANNING

316-262-7271 • 315 ELLIS • WICHITA, KANSAS 67211

PROJECT NUMBER	SHEET
438-82971	5 OF 12

DESIGN	DRAWN	APPROVED	DATE	SCALE
NBW	TMG		4-99	NOTED

HUNTER\SS4 99-02-E278

BENCHMARK:
C.O.W. Benchmark disc 1/2 mi. east and 34' south of C of Pawnee and 119th St. W.
(6' West of hedge row)
Elev. = 145.50 (City Datum)

Scale: 1" = 40' Horizontal
1" = 5' Vertical
• = Iron

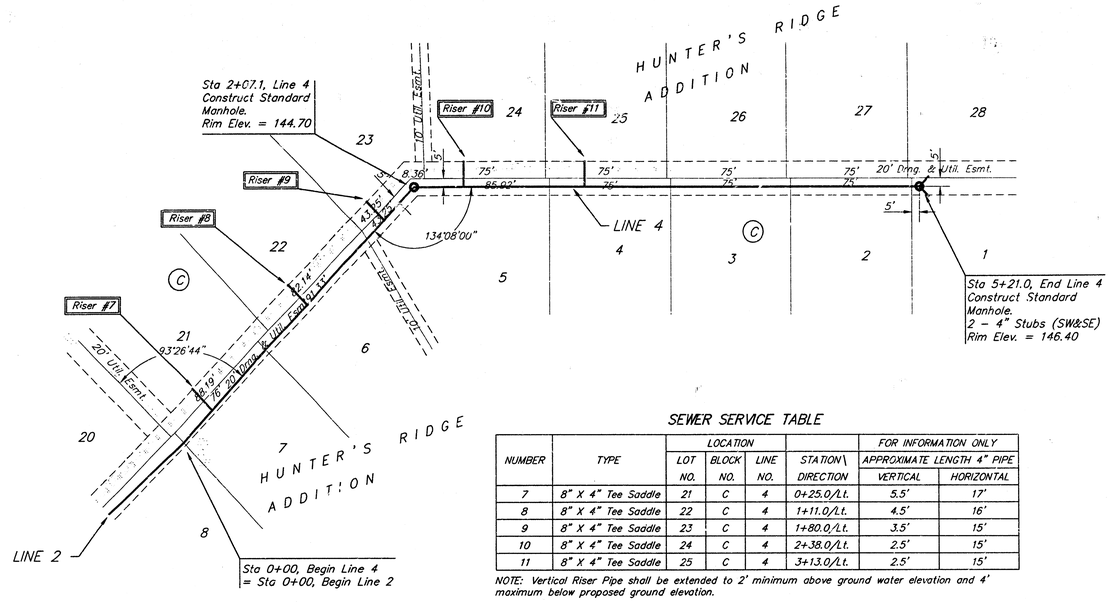

SEWER SERVICE TABLE

NUMBER	TYPE	LOCATION			STATION\ DIRECTION	FOR INFORMATION ONLY	
		LOT NO.	BLOCK NO.	LINE NO.		APPROXIMATE LENGTH 4" PIPE	
						VERTICAL	HORIZONTAL
7	8" X 4" Tee Saddle	21	C	4	0+25.0/Lt.	5.5'	17'
8	8" X 4" Tee Saddle	22	C	4	1+11.0/Lt.	4.5'	16'
9	8" X 4" Tee Saddle	23	C	4	1+80.0/Lt.	3.5'	15'
10	8" X 4" Tee Saddle	24	C	4	2+38.0/Lt.	2.5'	15'
11	8" X 4" Tee Saddle	25	C	4	3+13.0/Lt.	2.5'	15'

NOTE: Vertical Riser Pipe shall be extended to 2' minimum above ground water elevation and 4' maximum below proposed ground elevation.

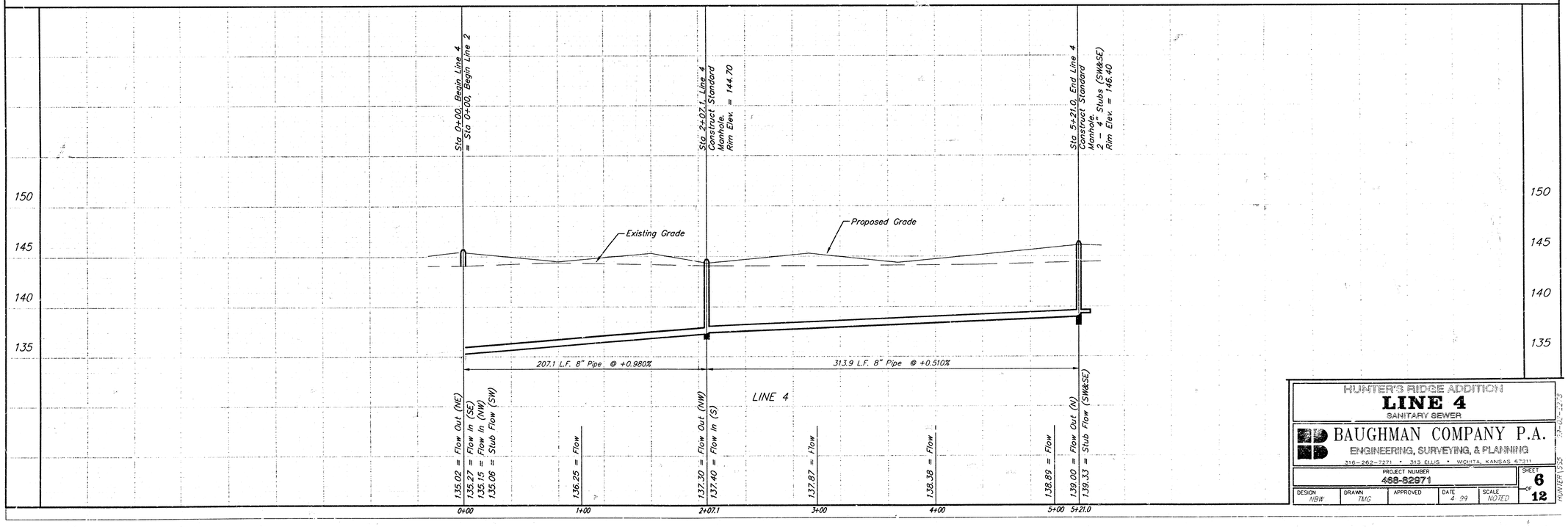

HUNTER'S RIDGE ADDITION
LINE 4
SANITARY SEWER

BAUGHMAN COMPANY P.A.
ENGINEERING, SURVEYING, & PLANNING
316-262-7271 • 315 ELLIS • WICHITA, KANSAS 67211

PROJECT NUMBER	SHEET
468-82971	6 OF 12

DESIGN	DRAWN	APPROVED	DATE	SCALE
NBW	TMG		4 99	NOTED

SEWER APPURTENANCES DETAILS

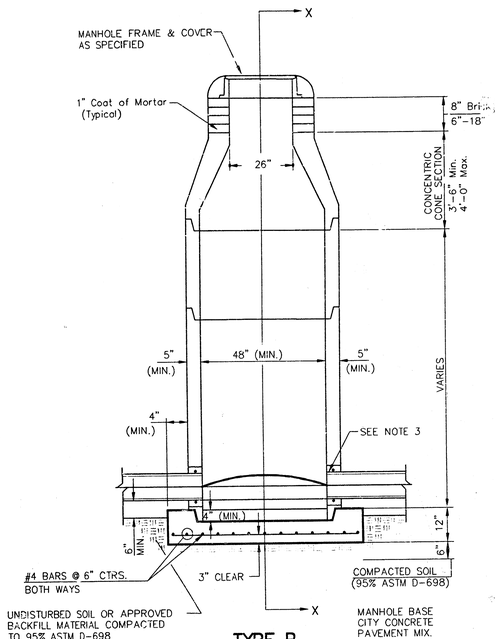

TYPE P
STANDARD MANHOLE

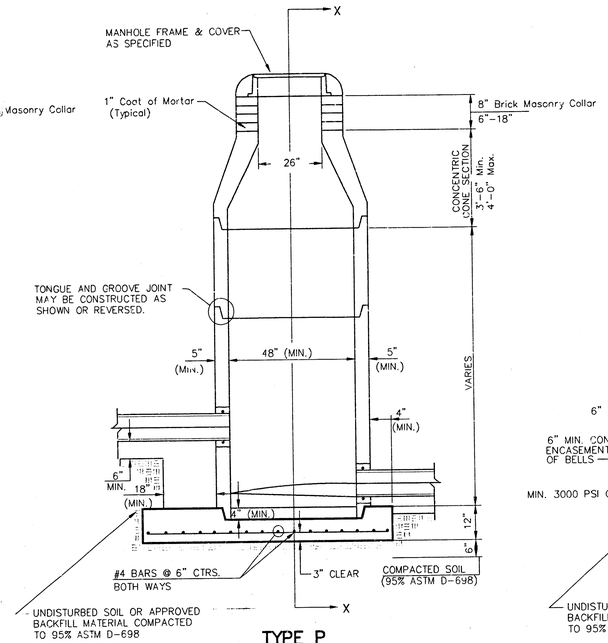

TYPE P
INSIDE DROP MANHOLE

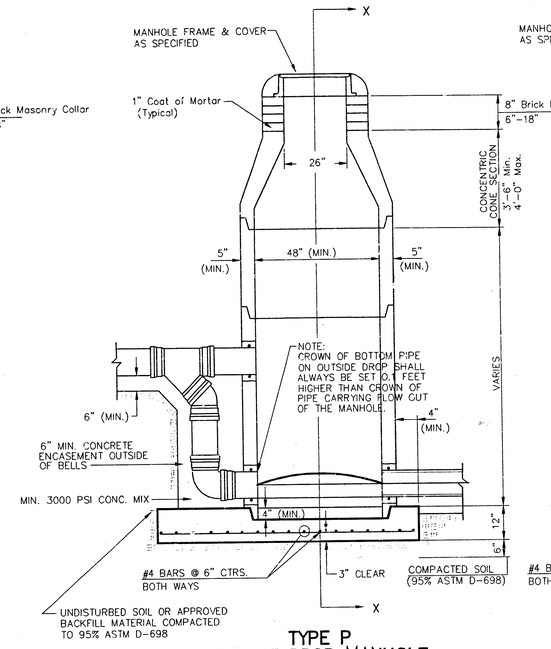

TYPE P
OUTSIDE DROP MANHOLE

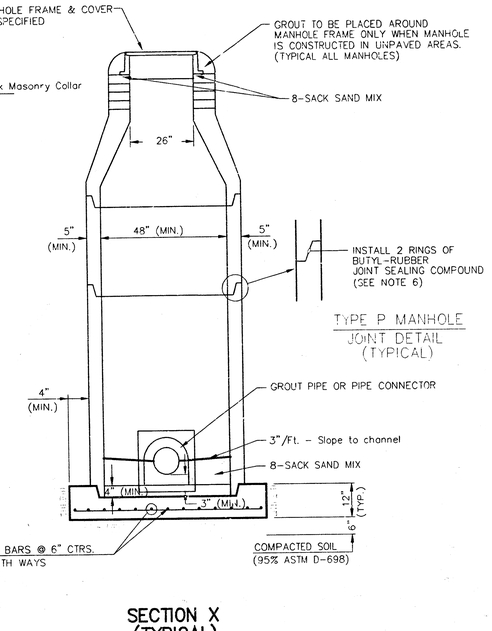

SECTION X
(TYPICAL)

GENERAL NOTES

PRECAST MANHOLE NOTES

1. ALL PRECAST CONCRETE MANHOLE SECTIONS SHALL CONFORM TO THE LATEST REVISIONS OF A.S.T.M. C478 AS MODIFIED BY THE SPECIFICATIONS.
2. NON-SHRINK GROUT SHALL BE NON-METALLIC TYPE.
3. APPROVED FLEXIBLE WATERSTOP GASKETS SHALL BE INSTALLED TO JOIN THE SEWER TO THE MANHOLE WALL WHEN A.B.S. COMPOSITE PIPE OR P.V.C. PIPE IS USED. FOR OTHER TYPES OF PIPE THE SEWER SHALL BE GROUTED IN PLACE WITH NON-SHRINK GROUT. THE SEWER PIPE SHALL BE SUPPORTED WITH CONCRETE ENCASEMENT A MINIMUM OF 3 FEET FROM THE MANHOLE WALL AND TO THE FIRST JOINT FOR V.C.P. SUCH THAT THE JOINT REMAINS FLEXIBLE.
4. ALL INSIDE SURFACES OF THE CONCRETE MANHOLE WHICH WOULD BE EXPOSED TO SEWER GAS SHALL BE COATED WITH 2 COATS TNEMEC SERIES 66 HI-BUILD EPOXOLINE, DRY THICKNESS OF 6 MILS (MIN.)
5. EXTERIOR MANHOLE WALLS SHALL BE COATED WITH 1 COAT MOBILARMA 633 BITUMINOUS COATING.
6. JOINT SEALING COMPOUND SHALL BE KENT SEAL NO. 2 OR APPROVED EQUAL.
7. PRECAST MANHOLES SHALL BE SET AT LEAST 4 INCHES INTO THE MANHOLE BASE.
8. TOP OF MANHOLE FLOOR SLAB SHALL BE AT LEAST 3 INCHES BELOW THE FLOW LINE OF THE OUTLET PIPE TO INSURE SUFFICIENT MINIMUM THICKNESS OF SHAPED INVERT.
9. LIFTING HOLES SHALL BE FILLED WITH NON-SHRINK GROUT AND THE INTERIOR SURFACE COATED AS SPECIFIED.
10. MORTAR USED IN MASONRY CONSTRUCTION SHALL CONTAIN 8 SACKS OF CEMENT PER CUBIC YARD. CONCRETE USED IN MANHOLE BASES SHALL CONFORM TO THE REQUIREMENTS OF CONCRETE FOR CONCRETE PAVEMENT CONSTRUCTION AS SPECIFIED IN THE CITY STANDARD PAVING SPECIFICATIONS USING CITY CONCRETE PAVEMENT MIX WITHOUT AIR ENTRAINING ADMIXTURE. MORTAR SHALL BE PLACED AROUND THE MANHOLE RING AS SHOWN ON THE DRAWINGS WHEN MANHOLES ARE CONSTRUCTED IN UNPAVED AREAS. MANHOLES CONSTRUCTED WHERE PIPE SIZES ARE SMALLER THAN 24" SHALL HAVE AN INSIDE DIAMETER OF 4'. MANHOLES CONSTRUCTED WHERE PIPE SIZES ARE 24" OR LARGER SHALL HAVE AN INSIDE DIAMETER OF 5'. COMPLETED MANHOLE SHALL BE WITHOUT LEAKS AND WATER TIGHT.
11. REINFORCING STEEL SHALL BE INSTALLED IN THE MANHOLE BASES AND SHALL CONSIST OF NO. 4 BARS PLACED ON 6" CENTERS IN BOTH DIRECTIONS. THE MANHOLE BASE REINFORCEMENT SHALL BE PLACED AT LEAST 3" ABOVE THE BOTTOM OF THE MANHOLE BASE. ALL COSTS FOR FURNISHING AND INSTALLING REINFORCING STEEL SHALL BE INCLUDED IN THE UNIT PRICE BID FOR THE MANHOLE.
12. OPENINGS SHALL BE CUT INTO THE MANHOLE WALL WHEN OUTSIDE DROPS ARE CONSTRUCTED ON EXISTING MANHOLES. SUCH OPENINGS CUT INTO EXISTING MANHOLES SHALL BE AS SMALL AS PRACTICAL TO FACILITATE INSTALLING AND GROUTING THE NEW PIPE IN PLACE. WATERSTOP GASKETS SHALL BE USED WITH P.V.C. AND A.B.S. COMPOSITE PIPE. THE NEW PIPE SHALL BE GROUTED INTO THE OPENING USING AN APPROVED NON-SHRINK GROUT FOR THE FULL MANHOLE WALL THICKNESS. THE EXTERIOR OF THE COMPLETED CONNECTION SHALL BE SEALED WITH AN APPROVED BITUMINOUS COATING SUCH THAT THE CONNECTION WILL BE WATER TIGHT. FLOOR OF MANHOLE SHALL BE MODIFIED TO FORM NEW FLOW CHANNEL FOR THE NEW CONNECTION AS INDICATED BY THE DRAWING. THIS WORK, INCLUDING MODIFICATION OF MANHOLE FLOOR, SHALL BE PAID FOR AT THE UNIT PRICE BID FOR OUTSIDE DROP STACK CONSTRUCTED ON EXISTING MANHOLE.
13. THE FLOORS OF ALL MANHOLES SHALL BE SHAPED WITH FLOW CHANNELS SUCH THAT THE MANHOLES WILL BE SELF CLEANING AND FREE OF AREAS WHERE SOLIDS COULD BE DEPOSITED AS SEWAGE FLOWS THROUGH THE MANHOLE FROM ALL INLET PIPES TO THE OUTLET PIPE. FLOW CHANNELS SHALL BE FORMED TO MATCH THE BOTTOM HALVES OF THE INFLOWING PIPES AND THE OUTFLOWING PIPE AS SHOWN BY THE DRAWINGS EXCEPT FOR INSIDE DROP MANHOLES. FLOW CHANNELS FOR INSIDE DROP MANHOLES SHALL BE CONSTRUCTED AS INDICATED BY THE DRAWING. MANHOLE FLOORS SHALL HAVE SLOPES OF 3 INCHES PER FOOT IN THE AREAS OUTSIDE OF THE FLOW CHANNELS SLOPED TOWARD THE FLOW CHANNELS. PIPES LAID THROUGH MANHOLES SHALL HAVE THE TOP HALF REMOVED TO NEAT LINES FOR THE FULL INSIDE DIAMETER OF THE MANHOLE. MANHOLE FLOORS SHALL THEN BE SHAPED AROUND THE BOTTOM HALF OF THE PIPE WHICH FORMS THE FLOW CHANNEL.
14. PIPES INSTALLED WITHIN THE EXCAVATION MADE FOR THE MANHOLE SHALL BE CRADLED WITH CONCRETE TO THE LIMITS OF THE MANHOLE EXCAVATION. WHEN CLAY PIPE IS USED, THE CRADLE SHALL EXTEND TO THE FIRST JOINT OUTSIDE THE MANHOLE. THE CRADLE SHALL BE TERMINATED AT THE CLAY PIPE JOINT IN A MANNER WHICH WILL MAINTAIN THE FLEXIBILITY OF THE JOINT. COST OF CRADLE WITHIN MANHOLE EXCAVATION OR TO CLAY PIPE JOINTS ADJACENT TO MANHOLE SHALL BE INCLUDED IN THE UNIT PRICE BID FOR THE MANHOLE.
15. MANHOLE COVER CASTINGS AND MANHOLE FRAME CASTINGS SHALL CONFORM TO THE REQUIREMENTS AS INDICATED IN THE STANDARD SPECIFICATIONS AND AS SHOWN IN THE STANDARD DETAIL DRAWING.
16. THE VERTICAL DROP IN INSIDE DROP MANHOLES SHALL NOT EXCEED 2' FOR INFLOWING PIPES SIZED 12" OR SMALLER AND 2' FOR INFLOWING PIPES LARGER THAN 12". THE CROWNS OF INFLOWING PIPES SHALL NEVER BE SET LOWER THAN THE CROWN OF THE OUTFLOWING PIPE.
17. STANDARD MANHOLES AND STANDARD INSIDE DROP MANHOLES SHALL BE BID AS STANDARD MANHOLES FOR THE TYPE AND DIAMETER INDICATED. OUTSIDE DROP MANHOLES SHALL BE BID AS STANDARD OUTSIDE DROP MANHOLES FOR THE TYPE AND DIAMETER INDICATED. ALL MANHOLE DIAMETERS WILL BE 4' UNLESS INDICATED OTHERWISE.
18. A BRICK MASONRY COLLAR SHALL BE INSTALLED BETWEEN THE CAST IRON FRAME AND THE CONCENTRIC CONE. THE COLLAR WILL HAVE 8" WALLS AND A VERTICAL HEIGHT OF 6" MINIMUM AND 18" MAXIMUM. A 1" COAT OF MORTAR WILL BE PLASTERED ON THE OUTSIDE OF THE COLLAR. THE USE OF PRE-CAST CONCRETE SPACERS FOR MANHOLE TOP ADJUSTMENT IS ALSO ALLOWED.

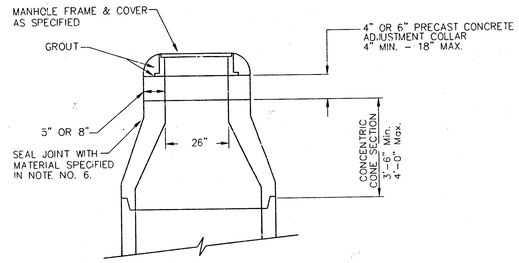

ALTERNATE CONSTRUCTION
IN UNPAVED AREAS

CITY OF WICHITA
STD. MANHOLE DETAILS
SEWER APPURTENANCES

BAUGHMAN COMPANY P.A.
ENGINEERING, SURVEYING, & PLANNING
316-262-7271 • 315 ELLIS • WICHITA, KANSAS 67211

PROJECT NUMBER	SHEET
468-82271	7 OF 12

DESIGN	DRAWN	APPROVED	DATE	SCALE
STAFF	STAFF		4-99	NONE

93-02-2273
Homer\mm

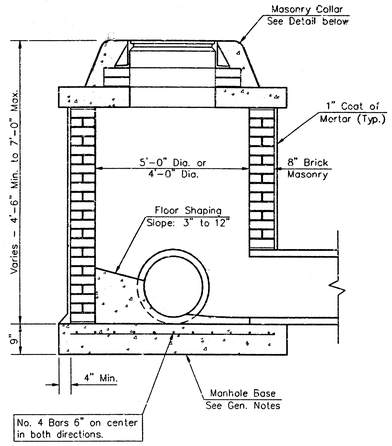

SHALLOW TYPE "A" MANHOLE

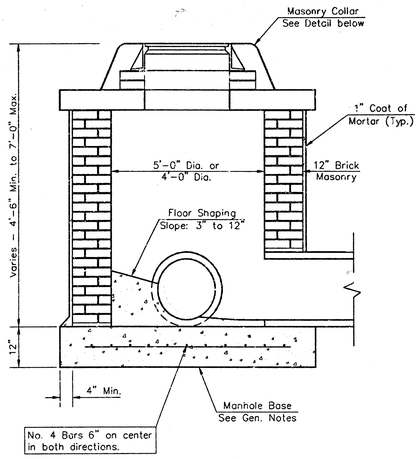

SHALLOW TYPE "B" MANHOLE

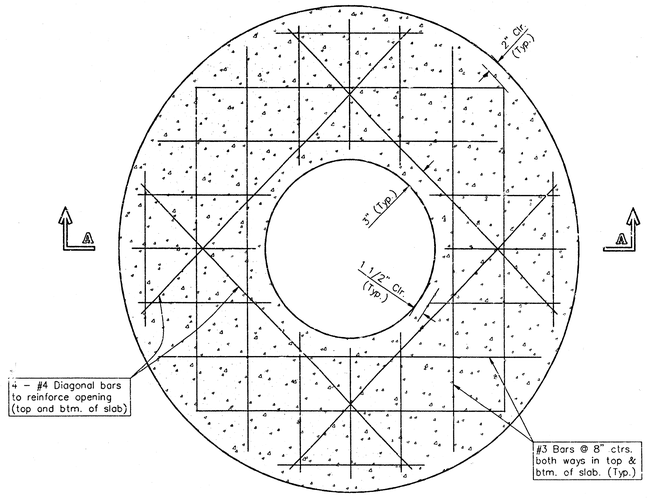

PLAN

GENERAL NOTES

1. Mortar used in masonry construction shall contain 8 sacks of cement per cubic yard. Concrete used in manhole bases shall conform to the requirements of concrete for concrete pavement construction as specified in the city standard paving specifications using city concrete cement mix without air entraining admixture. Mortar shall be placed around the manhole ring as shown on the drawings when manholes are constructed in unpaved areas. Type "A" shallow manholes can be used on sewers when the manhole is not located within public street pavement. Manholes constructed where pipe sizes are smaller than 24" shall have an inside diameter of 4'. Manholes constructed where pipe sizes are 24" or larger shall have an inside diameter of 5'. Completed manhole shall be without leaks and water tight.

2. Reinforcing steel shall be installed in the manhole bases and shall consist of no. 4 bars placed on 6" centers in both directions. The manhole base reinforcement shall be placed 6" above the bottom of the manhole base. All costs for furnishing and installing reinforcing steel shall be included in the unit price bid for the manhole.

3. The floors of all manholes shall be shaped with flow channels such that the manholes will be self cleaning and free of areas where solids could be deposited as sewage flows through the manhole from all inlet pipes to the outlet pipe. Flow channels shall be formed to match the bottom halves of the inflowing pipes and the outflowing pipe as shown by the drawings. Manhole floors shall have slopes of 3 inches per foot in the areas outside of the flow channels sloped toward the flow channels. Pipes laid through manholes shall have the top half removed to neat lines for the full inside diameter of the manhole. Manhole floors shall then be shaped around the bottom half of the pipe which forms the flow channel.

4. Pipes installed within the excavation made for the manhole shall be cradled with concrete to the limits of the manhole excavation. When clay pipe is used, the cradle shall extend to the first joint outside the manhole. The cradle shall be terminated at the clay pipe joint in a manner which will maintain the flexibility of the joint. Cost of cradle within manhole excavation or to clay pipe joints adjacent to manhole shall be included in the unit price bid for the manhole.

5. Manhole cover castings and manhole frame castings shall conform to the requirements as indicated in the standard specifications and as shown in the standard detail drawings.

6. The crowns of inflowing pipes shall never be set lower than the crown of the outflowing pipe.

7. Standard shallow manholes type "A" and "B" shall be paid for at the unit price bid per each for the type and diameter indicated. Standard special shallow manholes type "A" and "B" shall be paid for at the unit price bid per each for the type indicated. All standard shallow manhole diameters will be 4' unless indicated otherwise.

8. All brick used in manhole construction shall meet Grade SW of ASTM C652 or C62-87.

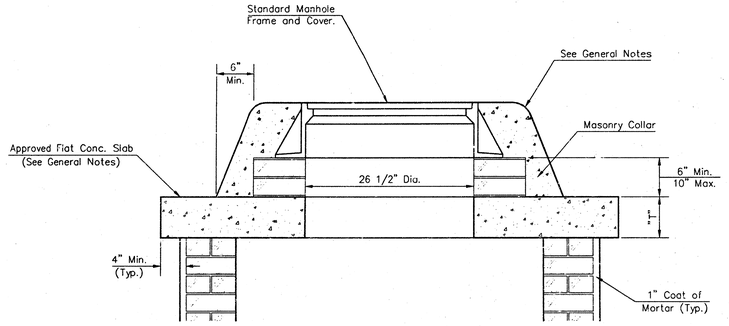

MASONRY COLLAR DETAIL

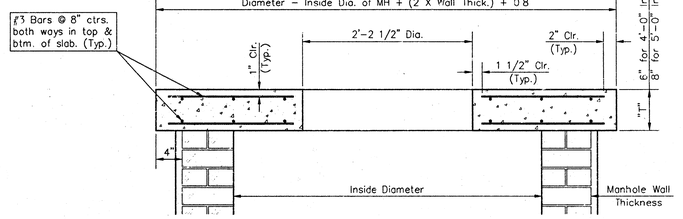

SECTION A-A

FLAT CONCRETE SLAB DETAILS

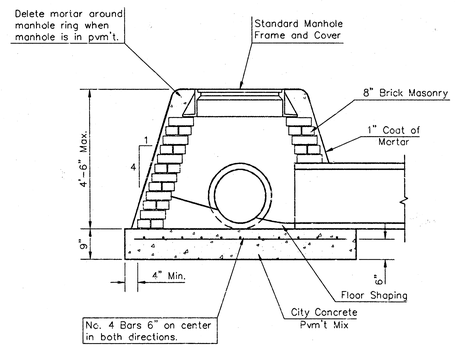

SPECIAL SHALLOW TYPE "A" MANHOLE

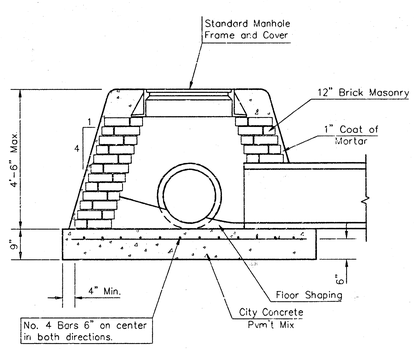

SPECIAL SHALLOW TYPE "B" MANHOLE

CITY OF WICHITA, KANSAS

Std. Manhole Detail

TYPE "A" AND TYPE "B"

BAUGHMAN COMPANY P.A.
ENGINEERING, SURVEYING, & PLANNING
316-262-7271 • 315 ELLIS • WICHITA, KANSAS 67211

PROJECT NUMBER	SHEET
488-82971	8 of 12

DESIGN	DRAWN	APPROVED	DATE	SCALE
C.O.W.	Staff		4-99	NONE

Hunter Downs 99-12-22

MANHOLE FRAME AND COVER DETAIL

ADOPTED AS STANDARD DESIGN BY
CITY OF WICHITA, KANSAS

MANHOLE COVER
Weight = 180 Lbs.

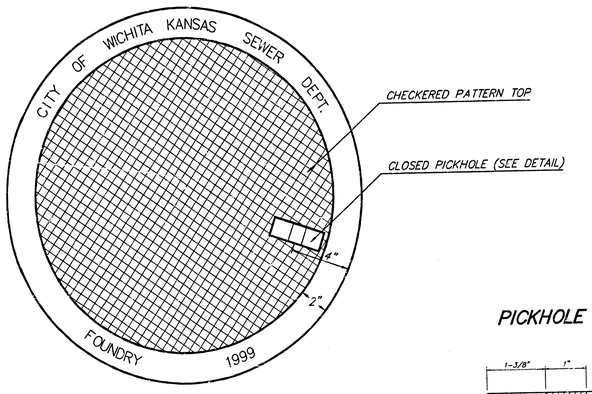

TOP VIEW

PICKHOLE DETAIL

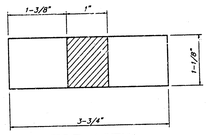

TOP VIEW

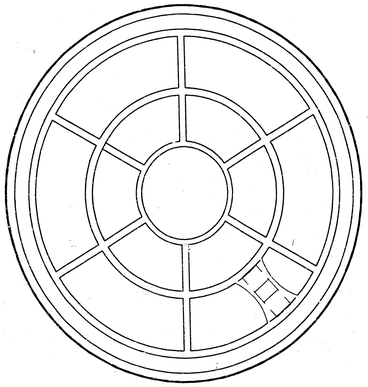

BOTTOM VIEW

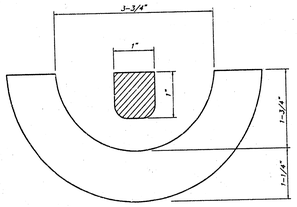

SECTION VIEW

MANHOLE FRAME
Weight = 145 Lbs.

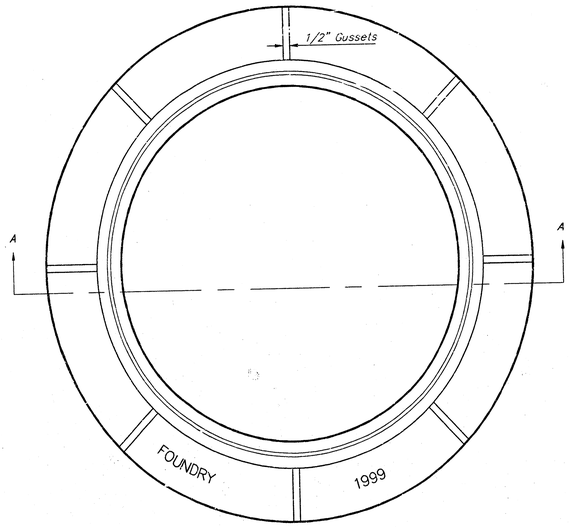

TOP VIEW

GENERAL NOTES

MANHOLE CASTINGS SHALL BE MANUFACTURED USING GOOD QUALITY GRAY IRON CONFORMING TO CLASS 30 OF A.S.T.M. DESIGNATION A-48. DIMENSIONS AND WEIGHTS SHOWN ON THE DETAILED DRAWINGS SHALL BE CONSIDERED AS MINIMUM REQUIREMENTS AND ANY DEVIATIONS FROM THE DIMENSIONS SHOWN MUST BE SPECIFICALLY APPROVED. THE FINISHED CASTINGS SHALL BE OF UNIFORM QUALITY, FREE FROM BLOWHOLES, POROSITY, HARD SPOTS, SHRINKAGE DISTORTIONS OR OTHER DEFECTS.

MANHOLE CASTINGS SHALL BE COATED WITH AN ASPHALT PAINT RESULTING IN A SMOOTH, TOUGH AND TENACIOUS COATING WHICH IS NOT BRITTLE OR TACKY.

MANHOLE CASTINGS SHALL BE MANUFACTURED SUCH THAT A COVER MANUFACTURED BY ANY ONE FOUNDRY WILL FIT INTERCHANGEABLY INTO A FRAME MANUFACTURED BY ANOTHER FOUNDRY AND STILL MEET ALLOWABLE CLEARANCES AND NON-ROCKING REQUIREMENTS. THIS WILL REQUIRE MANUFACTURING OF THE MATCHING FACES ON THE COVER AND THE FRAME TO CLOSE TOLERANCES.

THE OUTSIDE CIRCUMFERENCE OF THE VERTICAL FACE OF THE COVER AND THE INSIDE CIRCUMFERENCE OF THE VERTICAL FACE IN THE FRAME RECESS SHALL BE MANUFACTURED TO TOLERANCES SUCH THAT THE CLEARANCE BETWEEN THE COVER AND FRAME WILL NOT EXCEED 1/8" AT ANY POINT AROUND THE CIRCUMFERENCE OF THE COVER. THE SEATING SURFACES BETWEEN THE COVER AND FRAME SHALL BE MACHINED SUCH AS THESE SURFACES SHALL MAKE FULL CONTACT FOR THEIR FULL CIRCUMFERENCE TO PRECLUDE THE COVER FROM ROCKING IN THE FRAME.

THE MANHOLE FRAME AND COVER SHALL BE MARKED WITH LETTERING INDICATING THE NAME OF THE MANUFACTURER AND THE YEAR WHEN THE COVER OR FRAME WAS CAST. THE COVER SHALL BE FURTHER IDENTIFIED WITH REGARDS TO OWNERSHIP USING LETTERS AT LEAST 1 INCH IN HEIGHT. THIS IDENTIFICATION SHALL BE "CITY OF WICHITA SEWER DEPARTMENT". THE WORD DEPARTMENT MAY BE ABBREVIATED. THE TEXTURE OF THE TOP SURFACE OF THE COVER SHALL BE MANUFACTURED IN A CHECKERED PATTERN DESIGN AS INDICATED ON THE DRAWINGS. SMOOTH BLOCKOUTS SHALL BE UTILIZED TO HIGHLIGHT THE LETTERING ON THE COVER SURFACE. THE TOTAL AREA OF SMOOTH SURFACE BLOCKOUT SHALL NOT EXCEED THE AREA AS INDICATED ON THE DRAWING. POSITIONING OF SMOOTH BLOCKOUTS AND LETTERING MAY VARY FROM THAT SHOWN ON THE DETAILED DRAWING.

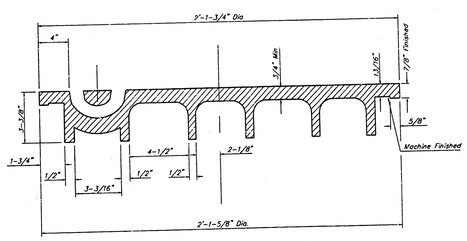

SECTION VIEW

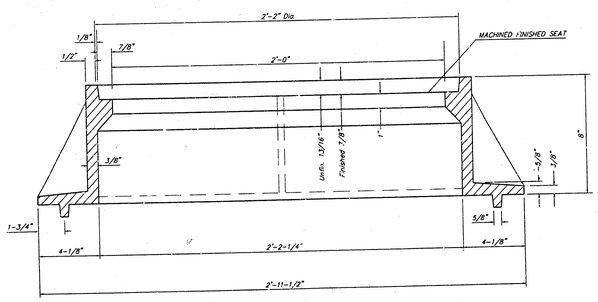

SECTION A-A

MANHOLE FRAME AND COVER DETAIL
ADOPTED AS STANDARD DESIGN BY
CITY OF WICHITA, KANSAS

BAUGHMAN COMPANY P.A.
ENGINEERING, SURVEYING, & PLANNING
316-262-7271 • 315 ELLIS • WICHITA, KANSAS 67211

PROJECT NUMBER	SHEET
488-62971	9 OF 12

DESIGN	DRAWN	APPROVED	DATE	SCALE
STAFF	STAFF		4-99	NONE

VERTICAL RISER DETAILS
ADOPTED AS STANDARD DESIGN
BY
CITY OF WICHITA, KANSAS
OCTOBER 1992

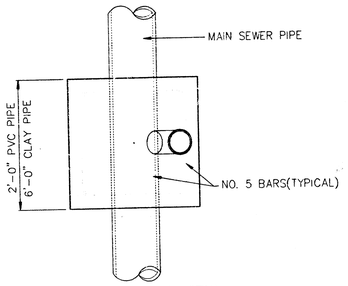

TYPICAL PLAN VIEW

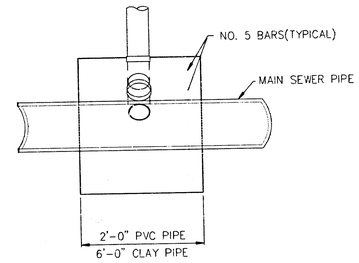

TYPICAL SECTION X-X

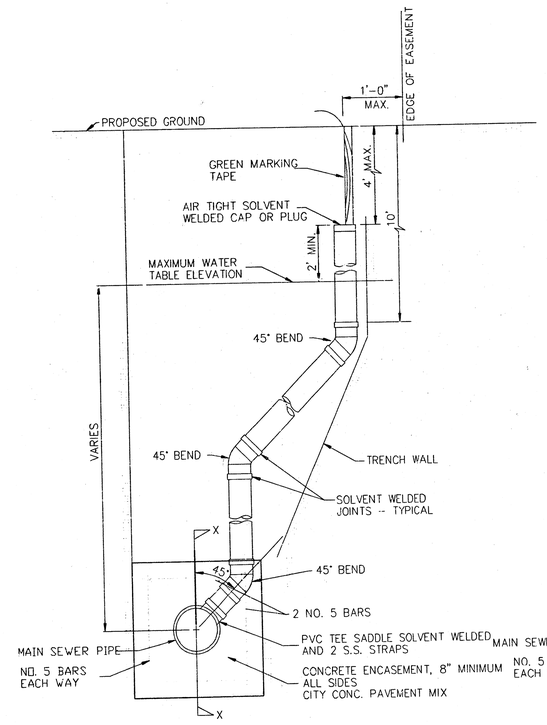

METHOD "A"

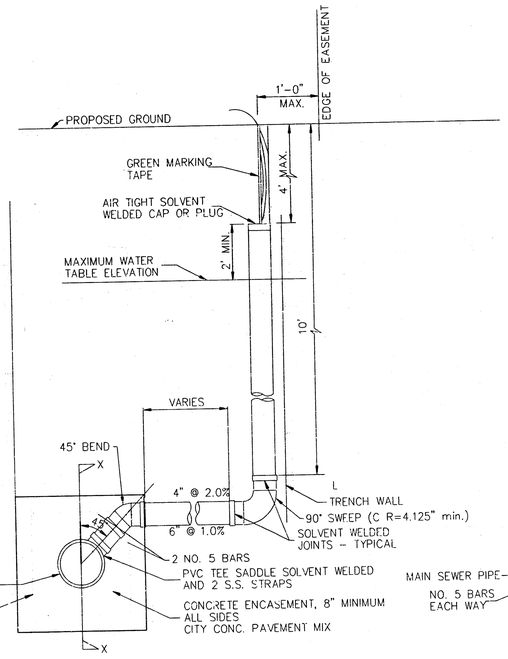

METHOD "B"

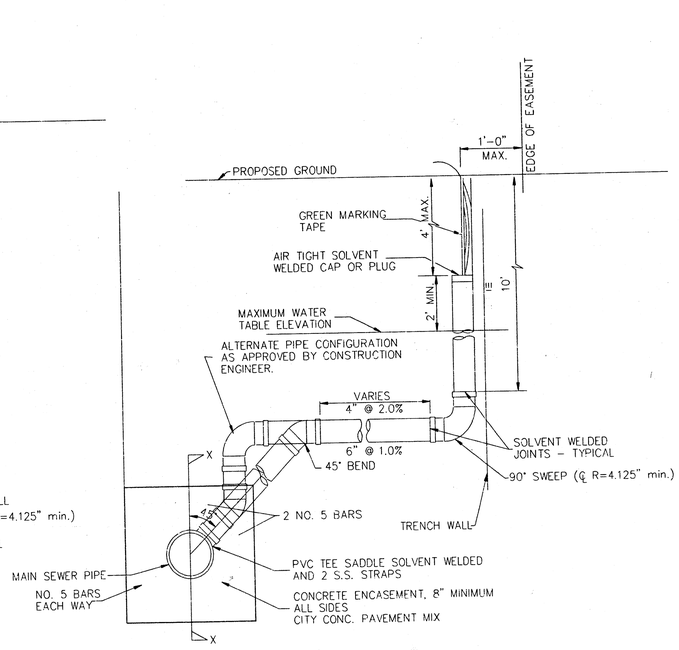

METHOD "C"

NOTE: RISER PIPE REQUIREMENTS AT MANHOLE STUBS SHALL BE SIMILAR TO THOSE SHOWN ABOVE.

GENERAL NOTES

1. RISERS. Risers shall be installed to serve all lots or tracts where the sanitary sewer main is below the water table. Risers shall also be installed to serve all lots and tracts where the sanitary sewer main depth is greater than 12 feet below the proposed ground elevation. Installation of risers because of field conditions shall be as approved by the Construction Engineer. The location of the risers to serve developed property shall be approved by the property owner and the Construction Engineer.

2. PIPE STUBS. Pipe stubs shall be installed in manholes where locations of manholes will provide satisfactory service connection as determined by the Construction Engineer. The vertical distance between the flowline of the manhole pipe stub and the flowline of the sanitary sewer main out of the manhole shall not exceed 2 feet. Risers shall be utilized at manhole pipe stubs as indicated in Note 1. Manhole pipe stubs shall be set such that the top of the stub is not lower than the top of the sanitary sewer main.

3. SIZING. Pipe stubs and risers shall be sized according to the plans and riser table where risers are indicated by the plans. Where risers or pipe stubs are required because of field conditions, the risers and stubs shall be six-inch diameter for commercial or industrial properties and 4" or 6" diameter for residential properties, based on lot size and sanitary sewer main depth. Sizing of risers and stubs shall be approved by the Construction Engineer prior to installation.

4. RISER OR STUB MATERIAL. Risers and stubs shall be constructed of Schedule 40 PVC Pipe, meeting the requirements of the latest revision of A.S.T.M. . All pipe joints shall be solvent welded.

5. REINFORCED CONCRETE ENCASEMENT. Riser connections to clay pipe sanitary sewers shall be reinforced concrete encased both ways from the riser centerline. The reinforced concrete encasement shall extend three feet from the riser centerline or stop at the first sanitary sewer pipe joint within three feet of the riser centerline. Riser connections to PVC Sanitary Sewer mains shall be reinforced concrete encased one foot each way from the riser centerline. The concrete encasement shall be reinforced using reinforcing steel as shown in the appropriate drawing. The concrete shall conform to the City Standard Specifications for concrete pavement.

6. BEDDING. Bedding around the sanitary sewer riser shall be compacted Pipe Bedding Type 1 or 2. The bedding shall be placed and compacted from the depth of the sanitary sewer main to the top of the sanitary sewer riser pipe. Compacted Pipe Bedding Type 1 or 2 shall be required for all risers whether constructed in vertical wall or sloped wall trenches. Bedding material and construction practices shall be approved by the Construction Engineer prior to installation.

7. SUPPORT OF RISERS. Sanitary sewer riser pipe shall be supported during trench backfill. The riser pipe shall be held in a vertical position at all times until trench backfill and compaction has been completed. Contractor's methods for supporting and backfilling the riser pipe shall be approved by the Construction Engineer.

8. PLUGGING. The ends of the riser pipes and manhole stubs shall be plugged using an airtight solvent welded cap or plug. Cap or plug fittings shall be approved by the Construction Engineer prior to installation. Caps or plugs which do not provide an airtight seal will not be accepted.

9. TOP OF THE RISER PIPE. The top elevation of the sanitary sewer riser pipe shall be built per plan elevations, unless otherwise directed by the Construction Engineer. Where riser elevations are not shown on the plans, the top of the risers shall be set at an elevation four feet below the proposed ground surface. If ground water is encountered, the top of the riser pipe shall be set at an elevation two feet (min.) above the maximum water table elevation, regardless of the riser elevation shown on the plans.

10. MARKING. Locations of the ends of the sanitary sewer riser pipe shall be marked by fastening green colored plastic tape to the end of the riser. The tape shall be supported by a length of wooden 2 x 4, extending from the top of the riser pipe to the proposed ground surface. The green tape shall be visible and extend one foot above the proposed ground surface. The green tape shall be 4 mil Polyethylene film with a minimum width of three inches, specifically manufactured for the purpose of identification of underground sewers.

11. LOCATION MEASURES. The project inspector shall record and document the location of all risers constructed as measured from the nearest manhole, indicating the direction from the manhole, the direction and distance from the main, riser size, and elevation of the top of the riser.

12. RISER LOCATION. The riser shall be located per plan if shown. If not shown on the plan, the riser shall be located at the center of the lot, within one foot of the property side of the easement for the lot being served. All riser locations shall be approved by the Construction Engineer prior to installation.

13. PAYMENT. "Sanitary sewer risers" shall be paid for at the contract unit price per each, which price shall be full compensation for all pipe, fittings, marking tape, length of wooden 2 x 4, reinforced concrete encasement, support during backfill, backfill, labor, site restoration, and any other items necessary to complete the work.

    "Manhole stubs" shall be paid for at the contract unit price per each, which shall be full compensation for all labor, material, and incidentals necessary to complete the work including all pipe, fittings, reinforced concrete encasement, and all other items as required and listed for "Sanitary Sewer Risers".

City of Wichita Standard

Riser Details

BAUGHMAN COMPANY P.A.
ENGINEERING, SURVEYING, & PLANNING
316-262-7271 • 315 ELLIS • WICHITA, KANSAS 67211

PROJECT NUMBER					SHEET
488-82971					10 OF 12
DESIGN	DRAWN	APPROVED	DATE	SCALE	
			4-99	NONE	

11-01-2278
Hunter Woerth

BENCHMARK:
C.O.W. Benchmark disc 1/2 mi.
east and 34' south of C of
Pownee and 119th St. W.
(6' West of hedge row)
Elev. = 145.50 (City Datum)

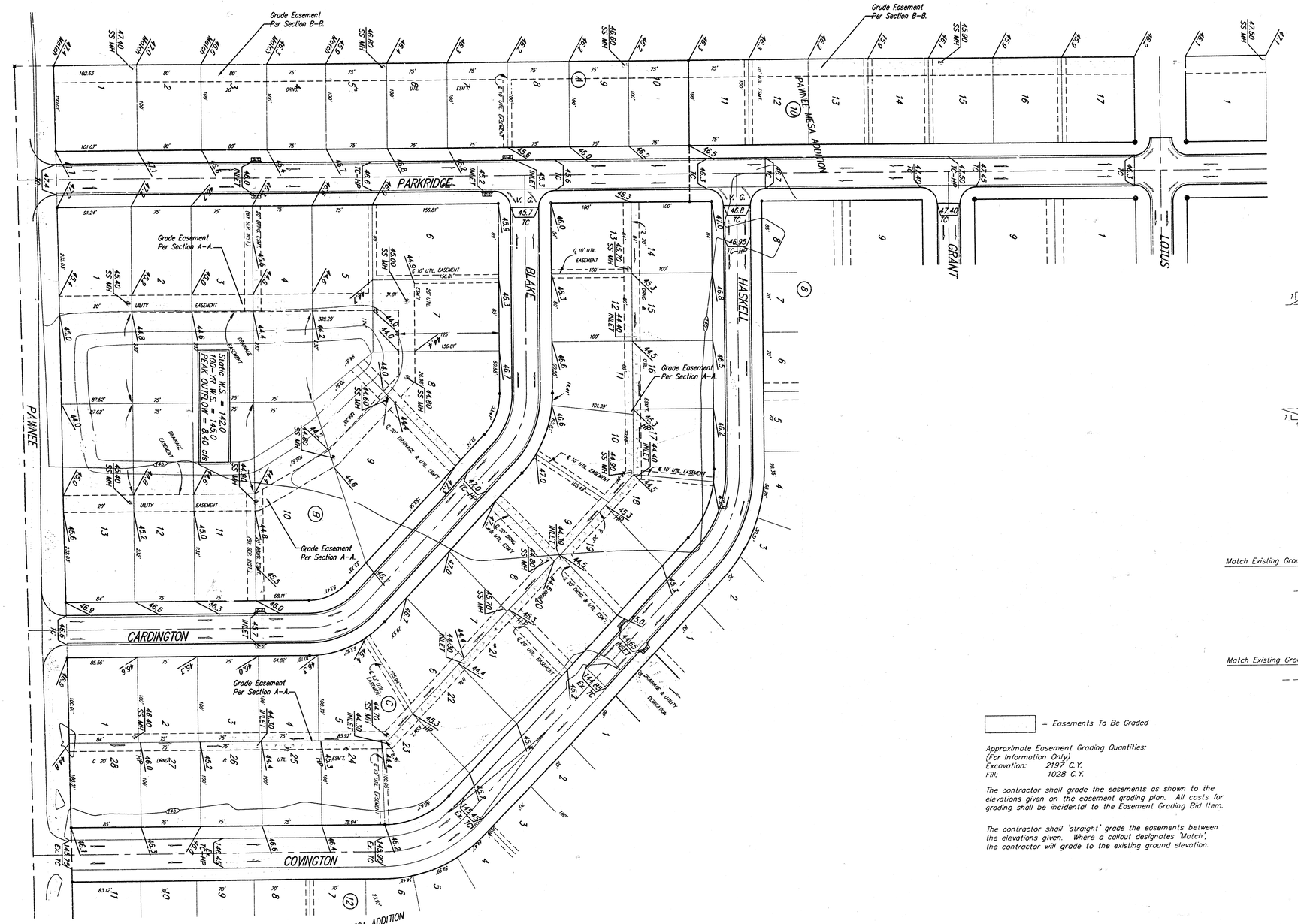

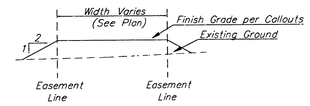

TYPICAL FILL SECTION

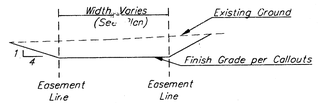

TYPICAL CUT SECTION

SECTION A–A

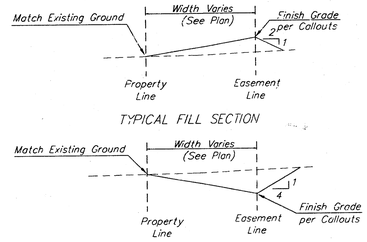

TYPICAL FILL SECTION

TYPICAL CUT SECTION

SECTION B–B

= Easements To Be Graded

Approximate Easement Grading Quantities:
(For Information Only)
Excavation: 2197 C.Y.
Fill: 1028 C.Y.

The contractor shall grade the easements as shown to the elevations given on the easement grading plan. All costs for grading shall be incidental to the Easement Grading Bid Item.

The contractor shall 'straight' grade the easements between the elevations given. Where a callout designates 'Match', the contractor will grade to the existing ground elevation.

HUNTER'S RIDGE ADDITION

ESMT. GRADING PLAN

WICHITA, KANSAS

BAUGHMAN COMPANY P.A.
ENGINEERING, SURVEYING, & PLANNING
316-262-2771 • 315 ELLIS • WICHITA, KANSAS 67211

PROJECT NUMBER	SHEET
468-92971	11 of 12

DESIGN	DRAWN	APPROVED	DATE	SCALE
NEW	TMG		4-93	NOTED

Hunter\ESGRPT 4/7-02-22-78

HUNTERS RIDGE ADDITION

WICHITA, SEDGWICK COUNTY, KANSAS

State of Kansas)
Sedgwick County) SS We, Baughman Company, P.A., Surveyors in aforesaid county and state do hereby certify that we have surveyed and platted "HUNTERS RIDGE ADDITION", Wichita, Sedgwick County, Kansas, and that the accompanying plat is a true and correct exhibit of the property surveyed, described as and being a replat of Lots 1 through 28, Block 9, and Lots 1 through 10, Block 10, and Lots 1 through 25, Block 11, TOGETHER with that part of Parkridge lying east of and adjacent to Lots 1 through 10 in said Block "?" and that part of Blake and Cardington lying between said Blocks 9 and ?, and all of Blake Ct. lying in said Block 11, all as platted in Pawnee Mesa Addition, an Addition to Sedgwick County, Kansas.

Existing easements and dedications being vacated by virtue of K.S.A. 12-512(b).

All being situated in the E1/2 of the SW1/4 of Sec. 31, Twp. 27-S, R-1-W of the 6th P.M., Sedgwick County, Kansas.

Baughman Company, P.A.

Michael G. Conrey, Surveyor
LS-8713 3-1-99
LICENSED KANSAS LAND SURVEYOR

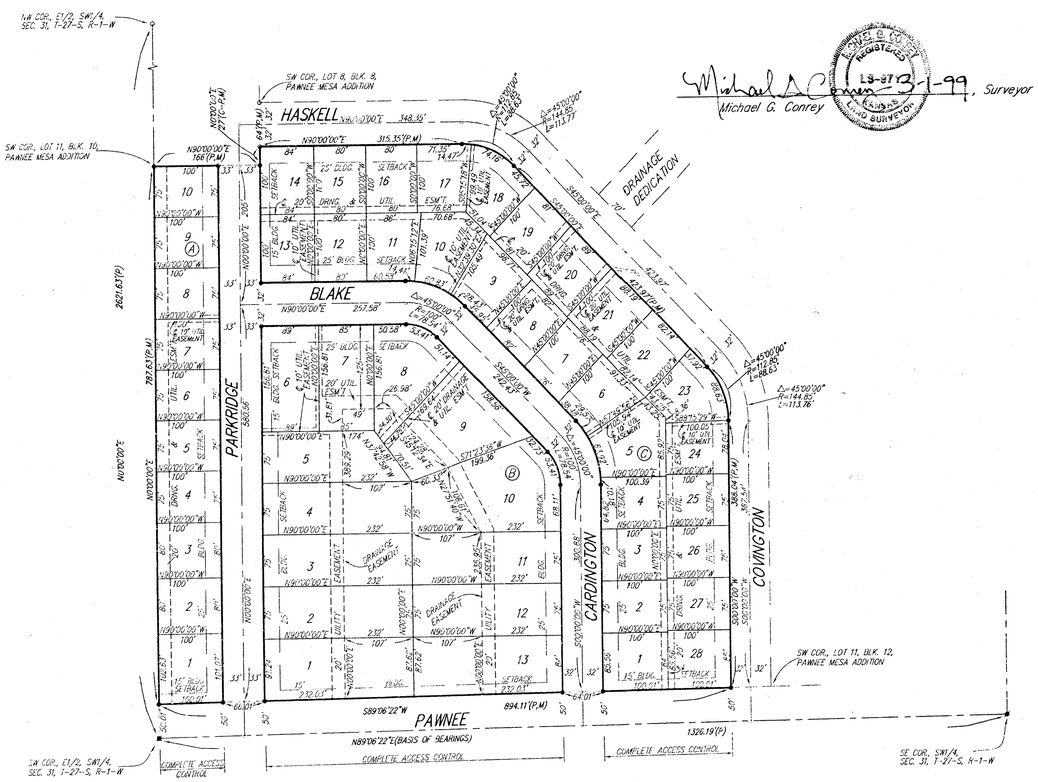

■ = ⅜" REBAR (FOUND)
■ = #5 REBAR (FOUND)
○ = 1/2" IRON (FOUND)
● = #4 REBAR W/ "BAUGHMAN" CAP (FOUND)

(M) = MEASURED
(P) = PLATTED
(C-P) = CALCULATED PER PLATTED INFO.

MINIMUM BUILDING PAD ELEVATION FOR LOWEST OPENING TO THE STRUCTURES		
BLOCK	LOT(S)	ELEVATION (FOR CITY DATUM)
B	1-13	1415.0

BENCHMARK:
CITY OF WICHITA BENCHMARK DISC - 1/2 MI. EAST OF 119TH ST. W. ON SOUTH SIDE OF PAWNEE, 34' SOUTH OF ℄ OF PAWNEE, 6' WEST OF HEDGE ROW SOUTH
ELEV. = 1415.50 CITY DATUM

Know all men by these presents that we, the undersigned, have caused the land in the surveyors certificate to be platted into Lots, Blocks, and Streets, to be known as "HUNTERS RIDGE ADDITION", Wichita, Sedgwick County, Kansas. The utility easements are hereby granted as indicated for the construction and maintenance of all public utilities. The drainage and utility easements are hereby granted as indicated for drainage purposes and for the construction and maintenance of all public utilities. The drainage easements are hereby granted as indicated for drainage purposes. The streets are hereby dedicated to and for the use of the public. All abutters rights of access to or from Pawnee Ave. over and across the south line of Lot 1, Block A, and over and across the south line of Lots 1 and 13, Block B, and over and across the south line of Lots 1 and 28, Block C are hereby granted to the City of Wichita, Kansas. The Minimum Building Pad Elevations for the lowest opening to the structures shall be as indicated on the face of the plat.

Greystone Construction, Inc.

Quentin Moeder, Vice-President

State of Kansas)
Sedgwick County) SS The foregoing instrument acknowledged before me, this 1ST day of MARCH, 1999, by Quentin Moeder, Vice-President of Greystone Construction, Inc., on behalf of the corporation.

JUDITH M. TERHUNE
Notary Public - State of Kansas
My Appt. Expires 11-7-2001

Judith M. Terhune, Notary Public
JUDITH M. TERHUNE

My App't. Exp. 11-7-2001

We the undersigned, holders of a mortgage on the above described property, do hereby consent to this plat of "HUNTERS RIDGE ADDITION", Wichita, Sedgwick County, Kansas.

Emprise Bank

Sam E. Trummel, 3/2/99
SAM E. TRUMMEL (Title)

State of Kansas)
Sedgwick County) SS The foregoing instrument acknowledged before me, this 2ND day of MARCH, 1999, by SAM E. TRUMMEL, SR. VICE-PRESIDENT (Title) of Emprise Bank, on behalf of the bank.

Judith M. Terhune, Notary Public
JUDITH M. TERHUNE

My App't. Exp. 11-7-2001

JUDITH M. TERHUNE

This plat of "HUNTERS RIDGE ADDITION", Wichita, Sedgwick County, Kansas has been submitted to and approved by the Wichita-Sedgwick County Metropolitan Area Planning Commission, Wichita, Kansas.

Dated this ____ day of _____, 199__

Wichita-Sedgwick County Metropolitan Area Planning Commission

William M. Johnson, Chairman

Marvin S. Krout, Secretary

This plat approved and all dedications shown hereon accepted by the City Council of the City of Wichita, Kansas, this ____ day of _____, 1999.

Bob Knight, Mayor

Pat Burnett, City Clerk

Entered on transfer record this ____ day of _____, 1999.

James Alford, County Clerk

State of Kansas)
Sedgwick County) SS This is to certify that this plat has been filed for record in the office of the Register of Deeds, this ____ day of _____, 1999, at ____ o'clock __M; and is duly recorded.

Bill Meek, Register of Deeds

Linda Kizzire, Deputy

12/12

RECIP. DWG - TRN Nbr: 01 08 20 18 1999