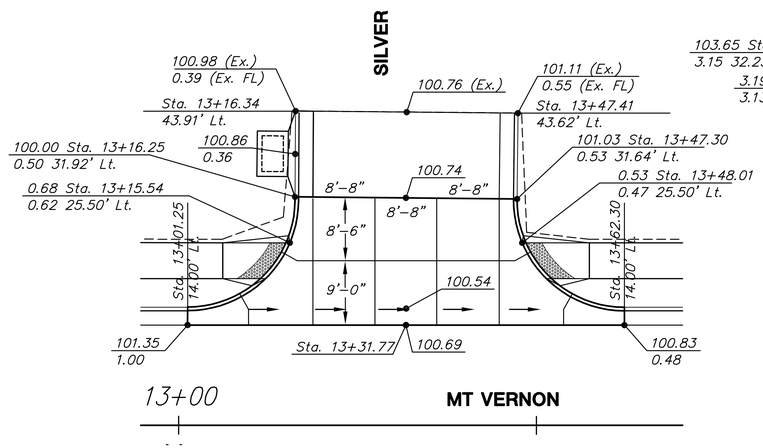

SILVER, 14.00' LT.

Scale: 1"=10'

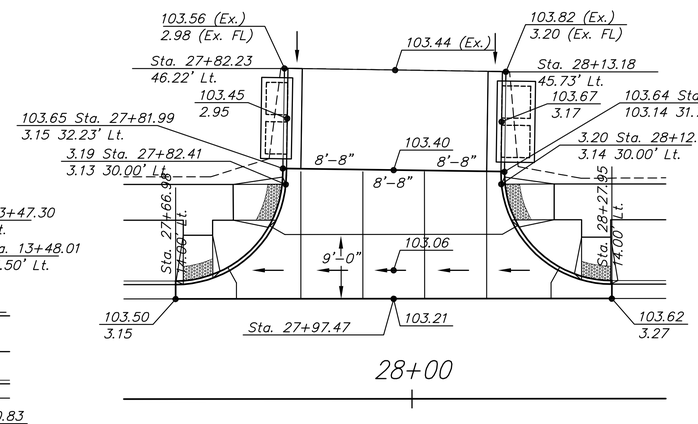

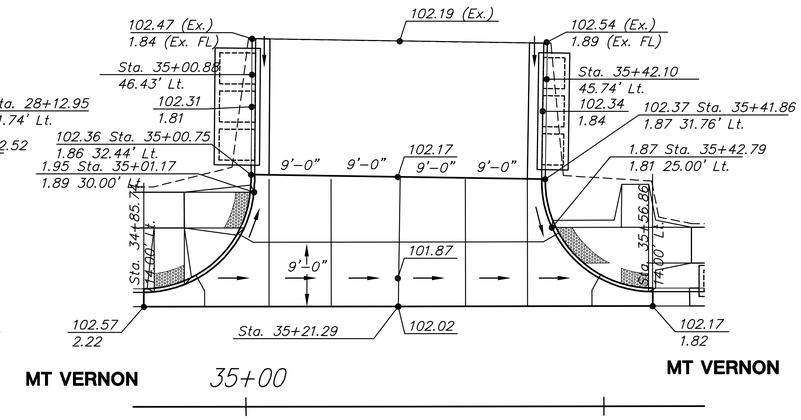

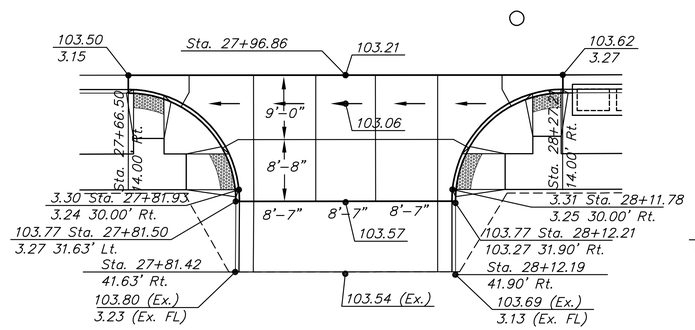

WACO, LT. & RT.

Scale: 1"=10'

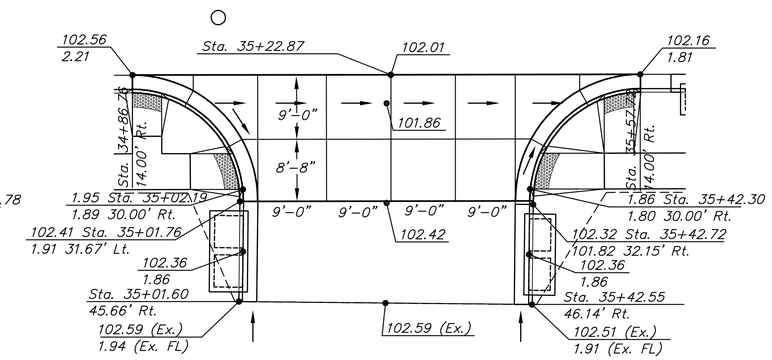

WATER, LT. & RT.

Scale: 1"=10'

See Sheet 21 for Valley Gutter Details. See Sheet 3 for Side Road Typical Sections.

LEGEND

C.J.	Contraction Joint
L.J.	Longitudinal Joint
I.J.	Isolation Joint
T.J.	Tied Construction Joint
D.E.J.	Doweled Expansion Joint
	Valley Gutter Flow Location
100.00	Spot Elevation
100.00 / 100.00FL	Back of Curb Elevation / Flow Line Elevation
0.00	High Edge of Curb Elevation

MKEC ENGINEERING CONSULTANTS, INC.
411 N. WEBB ROAD
WICHITA, KS. 67206
316 - 684 - 9600

MT VERNON STREET AND DRAINAGE IMPROVEMENTS FROM GREENWAY TO BROADWAY

VALLEY GUTTER PLANS

SHEET TITLE

472-84289
448-90385
468-84514
PROJECT NUMBER

JRA
DESIGN BY

JSB
DRAWN BY

JRA
CHECKED BY

ISSUED
May 27, 2008

REVISED

SHEET NO.
19 of 120

J:\CIVIL\05620\DWG\PAV\05620-SR2.DWG

PLOTTED: Tuesday, May 27, 2008 @ 04:30PM