S-2 4-32

RIVER WALK ADDITION

WICHITA, KANSAS

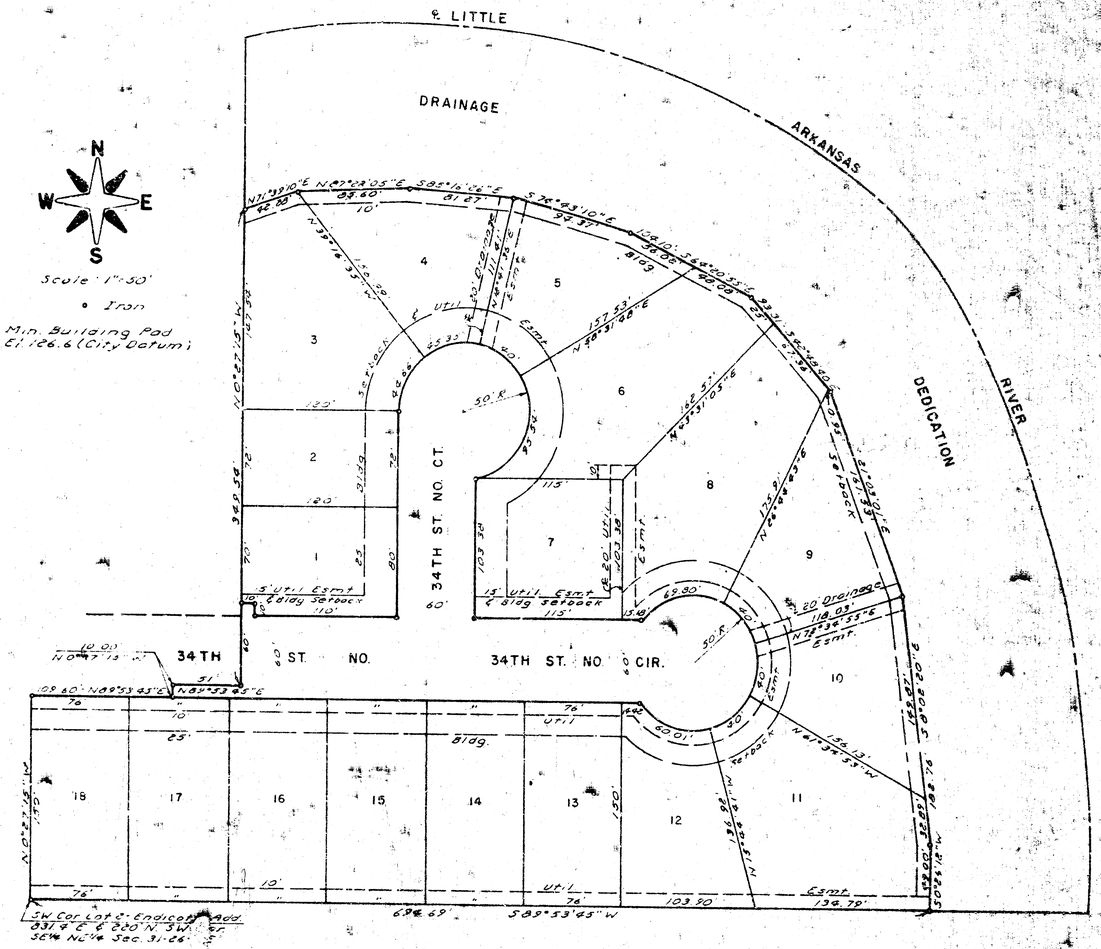

Know all men by these presents, that we, the undersigned, have caused the land described in the surveyors certificate to be platted into lots, streets and a drainage dedication to be known as "RIVER WALK ADDITION", Wichita, Kansas. The easements are hereby granted as indicated for the construction and maintenance of public utilities. The streets are hereby dedicated to and for the use of the public. The drainage dedication is hereby dedicated for drainage, riverbank maintenance, flood control, and river beautification. No building shall be constructed below Elev. 1126.6 (City Datum).

Raymond F. Linnen — Virginia C. Linnen

William F. Endicott — Peggy Jo Endicott

State of Kansas } S.S.
Sedgwick County }

The foregoing instrument was acknowledged before me this 30th day of June, 1983, by Raymond F. Linnen and Virginia C. Linnen, his wife.

Notary Public

My Commission Expires June 28, 1986

State of Kansas } S.S.
Sedgwick County }

The foregoing instrument was acknowledged before me this 30th day of June, 1983, by William F. Endicott and Peggy Jo Endicott, his wife.

Notary Public

My Commission Expires 12 May 1984

State of Kansas } S.S.
Sedgwick County }

We, Baughman Company, P.A., Surveyors in aforesaid county and state, do hereby certify, that we have surveyed and platted "RIVER WALK ADDITION", Wichita, Kansas, and that the accompanying plat is a true and correct exhibit of the property surveyed, described as a replat of Lot 2, Endicott Addition to Wichita, Sedgwick County, Kansas, and part of the SE¼ of the NE¼ of Section 31 and the SW¼ of the NW¼ of Section 32, in T26S, R1E of the 6th P.M., Sedgwick County, Kansas, described as follows: Beginning at the SW corner of said Lot 2, said point being 831.40 feet east and 220 feet north of the SW corner of the SE¼ of the NE¼ of said Sec. 31; thence northerly, along the west line of said Lot 2, 150 feet to the NW corner thereof; thence easterly, along the north line of said Lot 2, 109.60 feet to the NE corner thereof; thence northerly, along the east line extended of said Lot 2, 10 feet; thence easterly, parallel to the south line of said SE¼ of the NE¼, 51 feet; thence northerly, parallel to and 992 feet east of the west line of said SE¼ of the NE¼, to the center of the Little Arkansas River; thence southeasterly, along the center of said river to a point 220 feet north of the south line extended of the SE¼ of the NE¼ of said Sec. 31; thence westerly, parallel with the south of said SE¼, to the point of beginning.

Date June 27, 1983

Baughman Company, P.A.

Surveyor

This plat of "RIVER WALK ADDITION", Wichita, Kansas, has been submitted to and approved by the Wichita-Sedgwick County Metropolitan Area Planning Commission, Wichita, Kansas. Dated this 16TH day of June, 1983.

Wichita-Sedgwick County Metropolitan Area Planning Commission

Chairman

Secretary

This plat approved and all dedications shown hereon accepted by the Board of City Commissioners, Wichita, Kansas, this 26TH day of July, 1983.

Vice Mayor

City Clerk

This plat approved and all dedications shown hereon accepted by the Board of County Commissioners, Sedgwick County, Kansas, this ___ day of _____, 1983.

Chairman

Commissioner

Commissioner

County Clerk

Entered on record this 11 day of August

County Clerk

State of Kansas } S.S.
Sedgwick County }

This is to certify that this plat has been filed for record in the Office of the Register of Deeds this 11th day of August, 1983, at 1 o'clock, P.M., and is duly recorded.

Register of Deeds

Deputy

77740

S-2 4-32

1 of 8

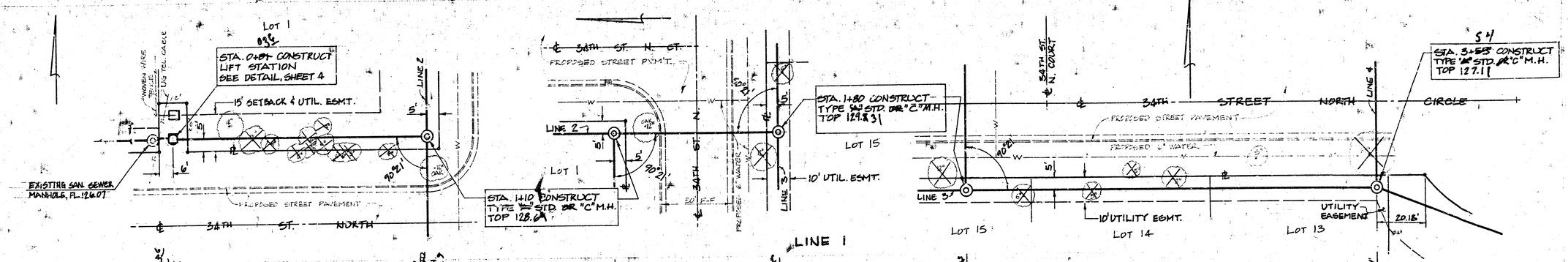

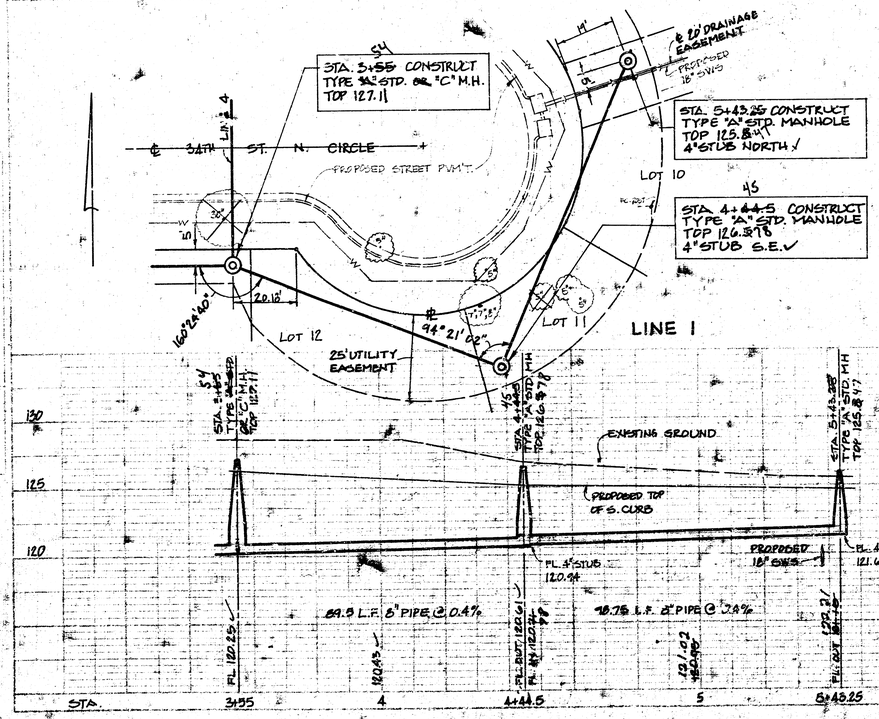

SCALE
PLAN: 1" = 20'
PROFILE: H" = 20' HORZ.
1" = 5' VERT.

As Built
J.L.L.
4-8-91

BENCH MARK:
R.R. SPIKE IN POWER POLE @ S.W. COR LOT 1, SACORDA ADDITION, ELEV. 130.75

NOTE:
REMOVE TREES AS REQUIRED. COST OF REMOVAL TO BE INCIDENTAL TO PROJECT.
(X) INDICATES TREE TO BE REMOVED.

ALL BLOCK CORNERS AND IRONS ARE TO BE PROTECTED. IF REMOVED DUE TO CONSTRUCTION, THE CONTRACTOR SHALL BE RESPONSIBLE FOR REPLACING THEM BY A LICENSED ENGINEER OR SURVEYOR AT CONTRACTOR'S EXPENSE.

LATERAL 69, MAIN 17
SANITARY SEWER 22
INCLUDING LIFT STATION

Riverwalk Addition
Wichita, Kansas

Project no. 468-76-245-81255-000-8-90-001

BAUGHMAN COMPANY, P.A.
SURVEYING & ENGINEERING
316/263-7271 • 230 LAURA • WICHITA, KANSAS 67211

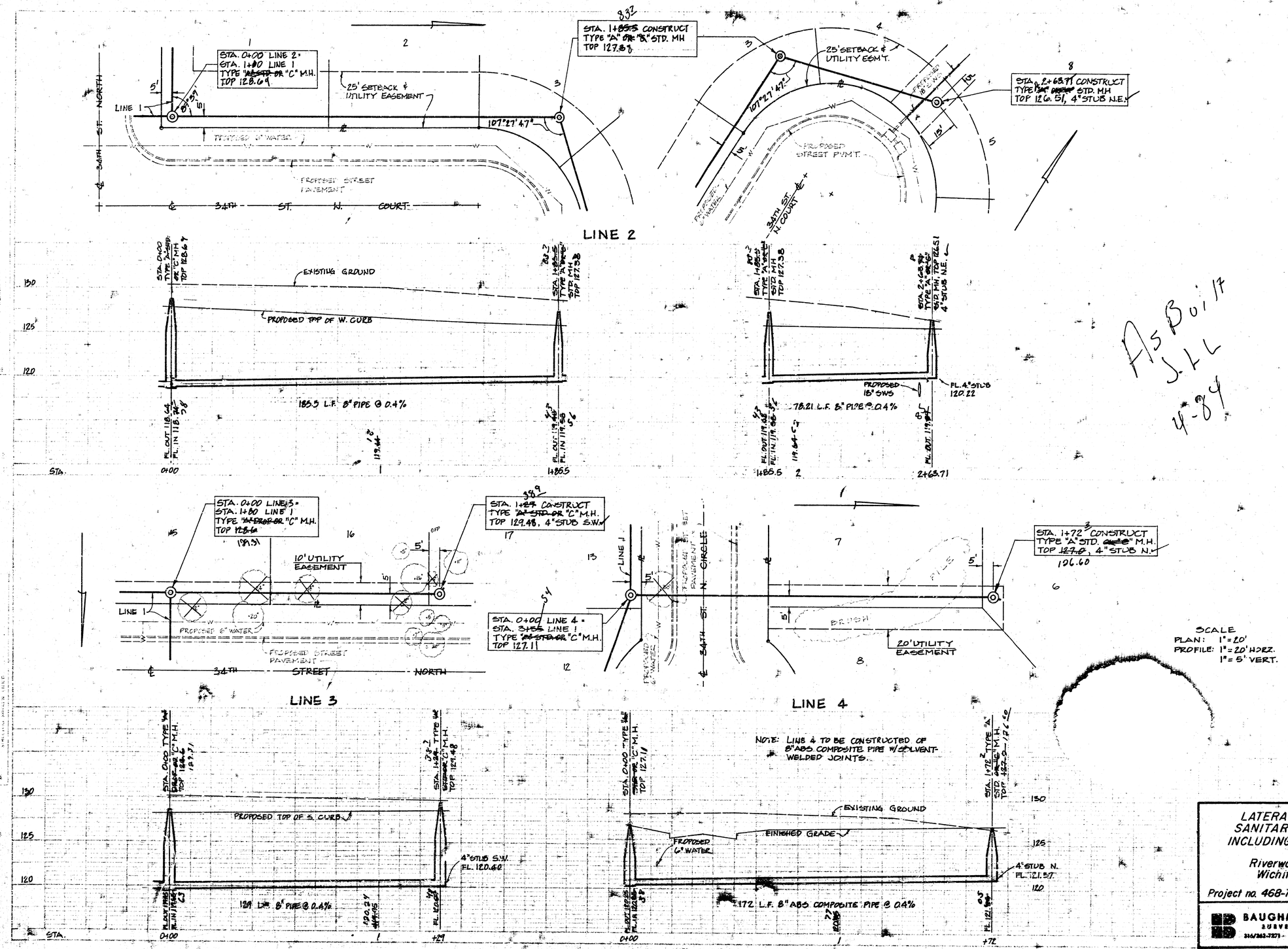

As Built
J.L.L
4-84

SCALE
PLAN: 1" = 20'
PROFILE: 1" = 20' HORZ.
1" = 5' VERT.

LATERAL 69, MAIN 17
SANITARY SEWER 22
INCLUDING LIFT STATION

Riverwalk Addition
Wichita, Kansas

Project no. 468-76-245-81255-000-000-001

BAUGHMAN COMPANY, P.A.
SURVEYING & ENGINEERING
316/262-7271 • 3[illegible] • WICHITA, KANSAS 67211

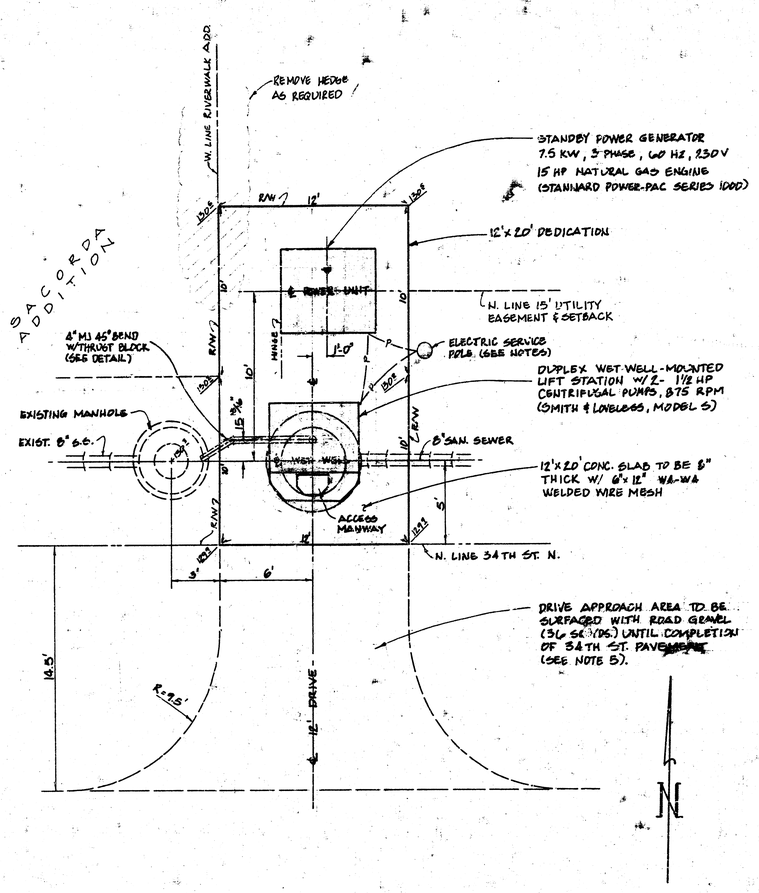

LIFT STATION
SITE PLAN
1"=4'

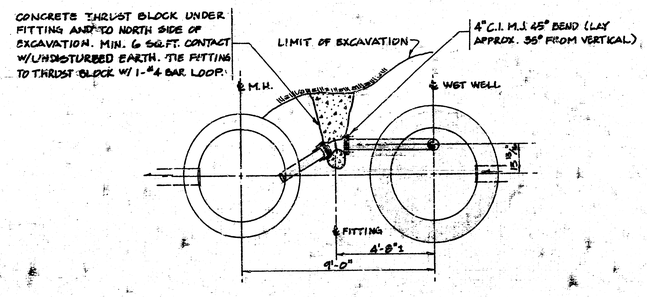

THRUST BLOCK DETAIL
NO SCALE

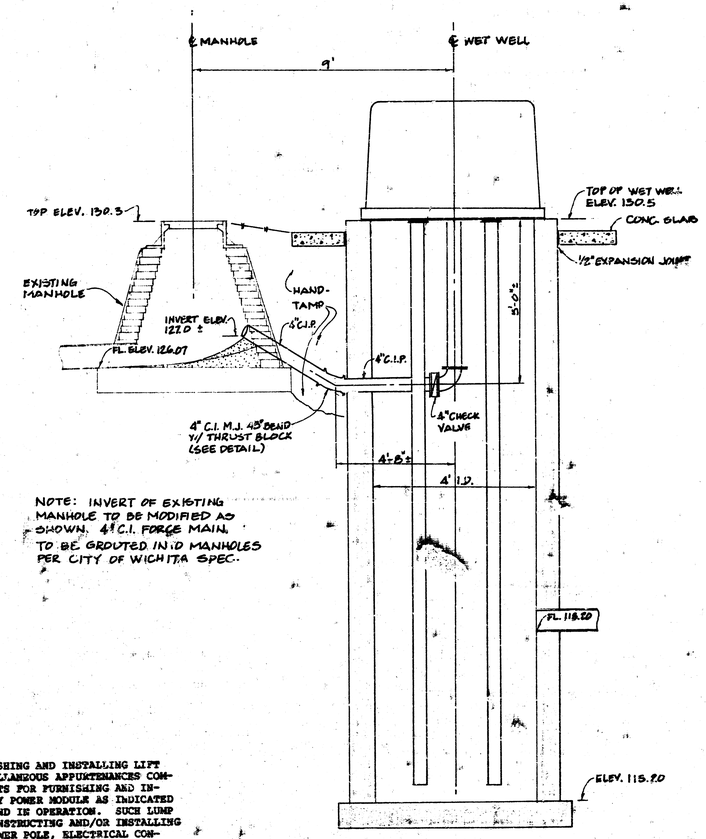

NOTE: INVERT OF EXISTING MANHOLE TO BE MODIFIED AS SHOWN. 4" C.I. FORCE MAIN TO BE GROUTED IN TO MANHOLES PER CITY OF WICHITA SPEC.

LIFT STATION
SECTIONAL ELEVATION
NO SCALE

NOTES:

1. THE LUMP SUM PRICE BID FOR FURNISHING AND INSTALLING LIFT STATION WITH STANDBY POWER AND MISCELLANEOUS APPURTENANCES COMPLETE IN PLACE SHALL INCLUDE ALL COSTS FOR FURNISHING AND INSTALLING THE LIFT STATION AND STANDBY POWER MODULE AS INDICATED ON THE SITE PLAN COMPLETE IN PLACE AND IN OPERATION. SUCH LUMP SUM BID SHALL INCLUDE THE COST OF CONSTRUCTING AND/OR INSTALLING COMPACTED SUBGRADE, CONCRETE PAD, POWER POLE, ELECTRICAL CONDUIT, ELECTRICAL WIRING, DISCONNECT SWITCH, ELECTRICAL POWER SUPPLY, NATURAL GAS FUEL SUPPLY, FINISHED GRADING AND ANY OTHER INCIDENTALS NECESSARY TO COMPLETE THE WORK.

2. CONTRACTOR SHALL INSTALL A 10" X 12' CREOSOTED WOOD POWER POLE IN A LOCATION APPROVED BY THE ENGINEER. POLE SHALL BE INSTALLED WITH 8' EXPOSED ABOVE GROUND. CONTRACTOR SHALL ALSO CONSTRUCT CONCRETE PAD FOR K.G.&E. TRANSFORMER ON THE EAST SIDE OF LIFT STATION PAD IN A LOCATION ALSO APPROVED BY THE ENGINEER. TRANSFORMER PAD SHALL BE CONSTRUCTED TO CONFORM WITH REQUIREMENTS OF K.G.&E.

3. A 2" CONDUIT SHALL BE INSTALLED UNDERGROUND FROM THE LIFT STATION MODULE TO THE STANDBY POWER MODULE AND FROM THE STANDBY POWER MODULE TO THE DISCONNECT SWITCH LOCATED ON POWER POLE. A 3/4" CONDUIT SHALL BE INSTALLED UNDERGROUND BETWEEN THE LIFT STATION MODULE AND THE POWER POLE TO FACILITATE CONNECTION OF THE ALARM SYSTEM BY OTHERS. THE ELECTRICAL POWER SUPPLY TO THE METER BASE MUST ALSO BE UNDERGROUND. ALL ELECTRICAL WIRING SHALL CONFORM TO THE CITY OF WICHITA CODE.

4. A UL LISTED LIGHTNING ARRESTOR SHALL BE INSTALLED AFTER THE DISCONNECT SWITCH FOR VOLTAGE SURGE PROTECTION OF THE PHASE GENERATOR, AUTOMATIC TRANSFER SWITCH, AND ALL SECONDARY WIRING.

5. CONCRETE DRIVE APPROACH TO LIFT STATION TO BE INSTALLED AS PART OF 34TH STREET PAVING PROJECT. CONTRACTOR SHALL GRADE AREA TO PROVIDE POSITIVE SURFACE DRAINAGE FROM LIFT STATION UNTIL PAVEMENT IS COMPLETED.

6. 3-PHASE PUMP MOTORS SHALL BE POWERED BY A ROTARY PHASE GENERATOR (1- TO 3-PHASE) WHICH SHALL BE AUTOMATICALLY ENERGIZED NO LESS THAN 6 SECS. NOR MORE THAN 15 SECS. BEFORE PUMP MOTOR IS ENERGIZED. THE PHASE GENERATOR SHALL BE "ROTO-PHASE" MODEL CM (3 HP OR SMALLER, 208 VOLTS, WITH 115 V CONTROL VOLTAGE) AS MANUFACTURED BY ARCO ELECTRIC PRODUCTS, OR EQUAL. THE PHASE GENERATOR SHALL BE INSTALLED IN A NEMA 3 R RAINTIGHT ENCLOSURE WITH REMOVABLE ACCESS COVER, AND LOCATED ON THE SERVICE POLE, A MINIMUM OF 2' ABOVE GROUND. THE LUMP SUM PRICE BID FOR FURNISHING AND INSTALLING THE LIFT STATION SHALL INCLUDE THE PHASE GENERATOR EQUIPMENT, FURNISHED AND IN PLACE, AND SHALL ALSO INCLUDE ONE SPARE PHASE GENERATOR, TO BE DELIVERED TO THE CITY OF WICHITA SEWER MAINTENANCE DEPARTMENT.

LATERAL 69, MAIN 17
SANITARY SEWER 22
INCLUDING LIFT STATION

Riverwalk Addition
Wichita, Kansas

Project no. 468-76-245-81255-000-000-001

BAUGHMAN COMPANY, P.A.
SURVEYING & ENGINEERING
316/263-7271 • 220 LAURA • WICHITA, KANSAS 67211

WET WELL DIAMETER	DIM. A	DIM. B	DIM. C	DIM. D	DIM. E	DIM. F	MANWAY G
4'-0"	4"	15 13/16"	33"	66"	27 7/8"	32 3/8"	14" x 24"
~~5'-0"~~	~~8"~~	~~19 13/16"~~	~~34"~~	~~68"~~	~~33 3/8"~~	~~37 7/8"~~	~~24 1/2" x 28"~~
~~6'-0"~~	~~2"~~	~~13 13/16"~~	~~40"~~	~~80"~~	~~27 3/8"~~	~~31 7/8"~~	~~24 1/2" x 28"~~

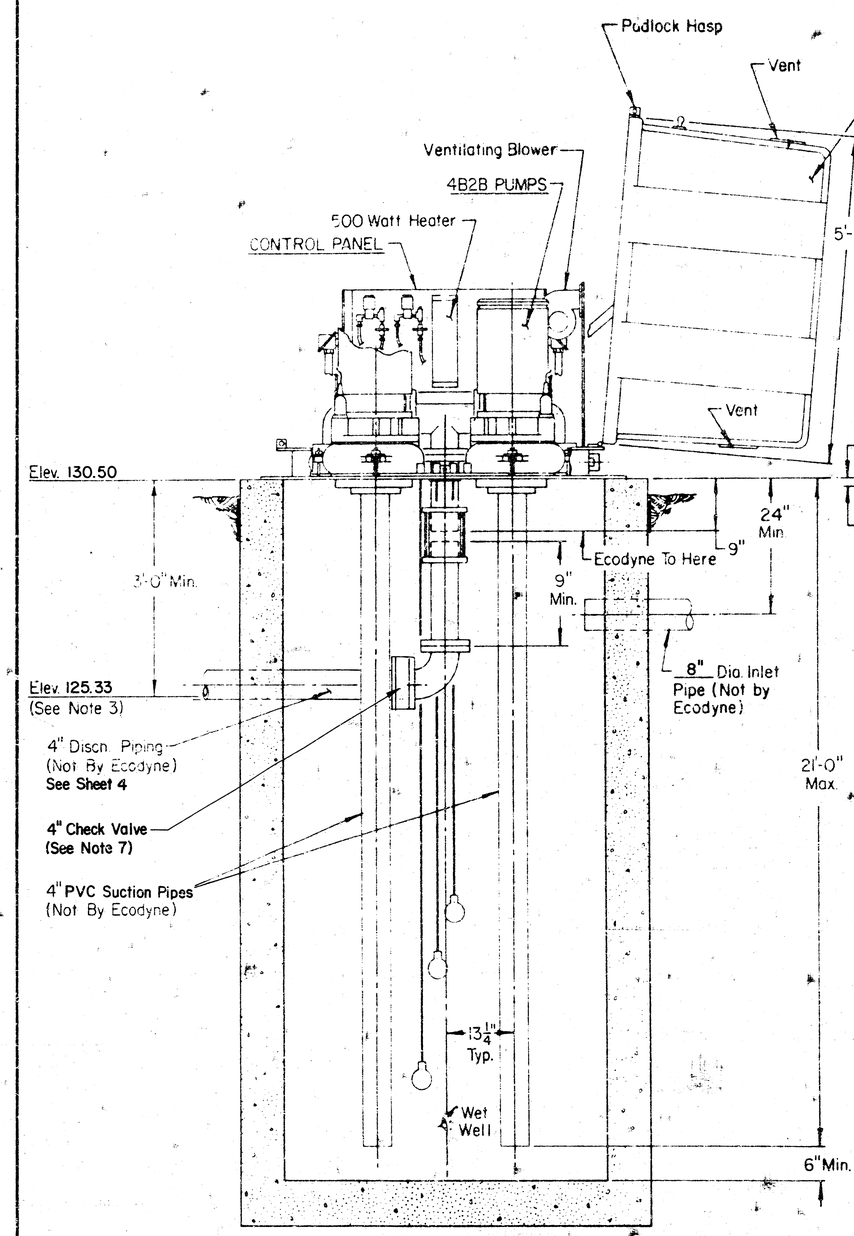

SECTIONAL ELEVATION

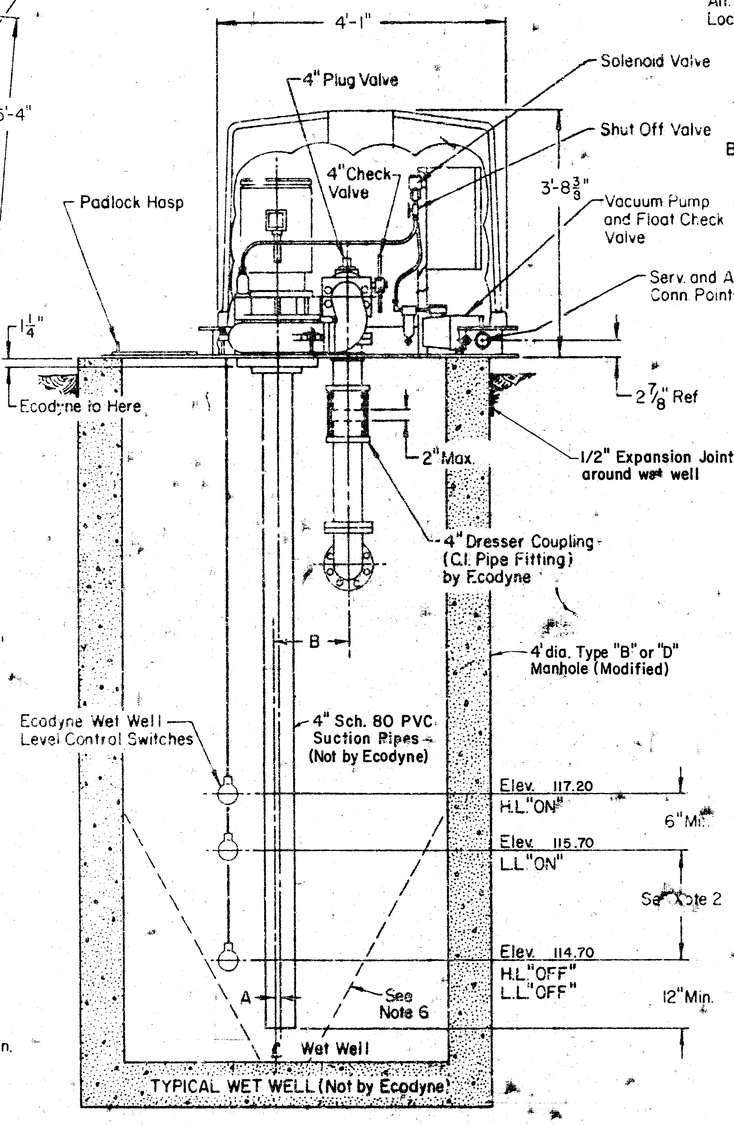

CROSS SECTION

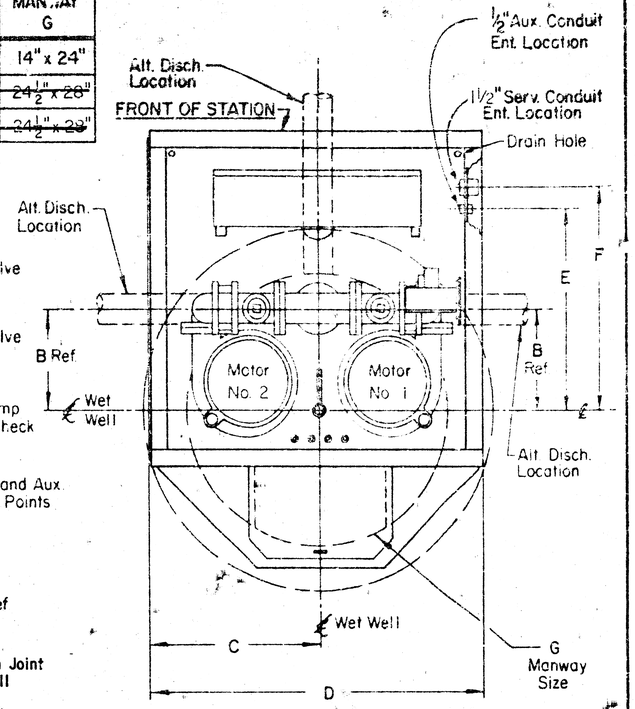

PLAN VIEW
MACH. CHAMBER
(Shown Less Cover)

NOTES:

1. Maximum Capacity - 300 G.P.M.
2. Volume In Gallons Between L.L."ON" and L.L."OFF" Should Equal Pumping Rate in G.P.M.
3. If End of Discharge Line is Below Elevation of Discharge Line at Point of Leaving Wet Well, Consult Factory.
4. If Discharge Line is Less than 200 Feet in Length a Check Valve May be Required - Consult Factory.
5. Pump Motors - 20 H.P. Maximum.
6. Provide 60° Slope in Wet Well - As Required.
7. **Discharge Check Valve Furnished by Ecodyne to be installed by Contractor.**

Lat. 69, Main 17, S.S. 22
Project no. 468-76-245-81255-000-000-001

4B2B PUMPS 87D196

THE DESIGN AND DETAIL OF THIS DRAWING IS THE PROPERTY OF ECODYNE CORPORATION AND IS NOT TO BE USED EXCEPT IN CONNECTION WITH OUR WORK. DESIGN AND INVENTION RIGHTS ARE RESERVED. DIMENSIONS ARE IN INCHES UNLESS OTHERWISE NOTED.

DRAWN BY D. Fisher	DATE 2-79	ALLOWABLE TOLERANCES	ECODYNE Smith & Loveless Division
CHECKED BY M.E.W.	DATE 2-79	FRACTIONS	FOR WET WELL MOUNTED SEWAGE PUMP LIFT STA. - MODEL "S" 4" PIPING - 4', 5' & 6' DIA. WELL
APPROVED BY C.V.	DATE 3-79	DECIMALS	
SCALE none		ANGLES	SIZE Ea.
ORIGINAL ISSUE N78-16		CODE P	SHEET NO. 87D196

A N80-16 6/80

REVISED SEPTEMBER 1980
REVISED DECEMBER 1981

SEWER APPURTENANCES DETAILS

ADOPTED AS STANDARD DESIGN BY

CITY of WICHITA, KANSAS

TYPE "A" MANHOLE

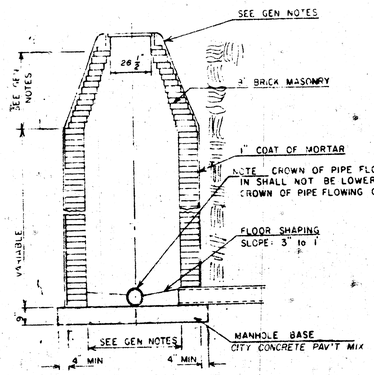

TYPE "A" INSIDE DROP MANHOLE

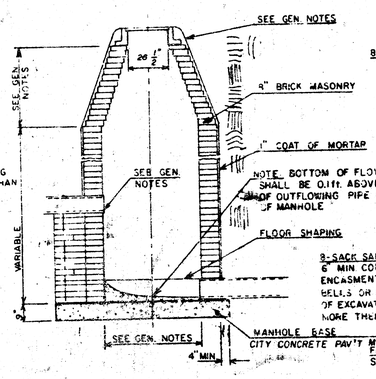

TYPE "A" OUTSIDE DROP MANHOLE

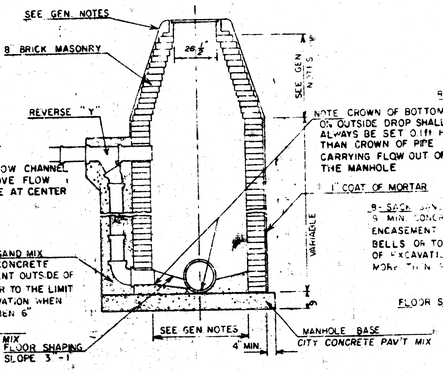

DETAIL OF OUTSIDE DROP CONSTRUCTED ON EXISTING MANHOLE

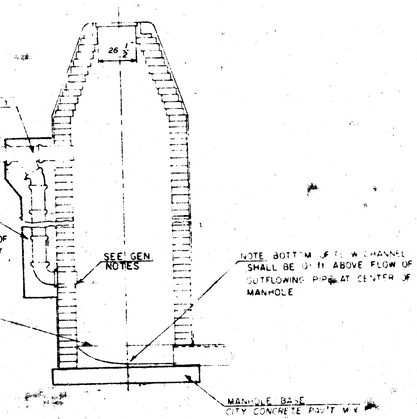

GENERAL NOTES

1. MORTAR USED IN MASONRY CONSTRUCTION SHALL CONTAIN 6 SACKS OF CEMENT PER CUBIC YARD. CONCRETE USED IN MANHOLE BASES SHALL CONFORM TO THE REQUIREMENTS OF CONCRETE FOR CONCRETE PAVEMENT CONSTRUCTION AS SPECIFIED IN THE LATEST STANDARD PAVING SPECIFICATIONS USING CITY CONCRETE PAVEMENT MIX WITHOUT AIR ENTRAINING ADMIXTURE. MORTAR SHALL BE PLACED AROUND THE MANHOLE RING AS SHOWN ON THE DRAWINGS WHEN MANHOLES ARE CONSTRUCTED IN UNPAVED AREAS. TYPE "A" MANHOLES CAN BE USED ON SEWERS UP TO 16' IN DEPTH WHEN THE MANHOLE IS NOT LOCATED WITHIN PUBLIC STREET PAVEMENT. MANHOLES CONSTRUCTED WHERE PIPE SIZES ARE SMALLER THAN 24" SHALL HAVE AN INSIDE DIAMETER OF 4'. MANHOLES CONSTRUCTED WHERE PIPE SIZES ARE 24" OR LARGER SHALL HAVE AN INSIDE DIAMETER OF 5'. THE HEIGHT OF THE CORBELS ON 4' DIAMETER MANHOLES SHALL BE 4'. MANHOLES HAVING A DIAMETER OF 5' SHALL HAVE CORBELS 6' IN HEIGHT. COMPLETED MANHOLE SHALL BE WITHOUT LEAKS AND WATER TIGHT.

2. REINFORCING STEEL SHALL BE INSTALLED IN THE MANHOLE BASES AND SHALL CONSIST OF NO. 4 BARS PLACED ON 6" CENTERS IN BOTH DIRECTIONS. THE MANHOLE BASE REINFORCEMENT SHALL BE PLACED 6" ABOVE THE BOTTOM OF THE MANHOLE BASE. ALL COSTS FOR FURNISHING AND INSTALLING REINFORCING STEEL SHALL BE INCLUDED IN THE UNIT PRICE BID FOR THE MANHOLE.

3. OPENINGS SHALL BE CUT INTO THE MANHOLE WALL WHEN OUTSIDE DROPS ARE CONSTRUCTED ON EXISTING MANHOLES. SUCH OPENINGS CUT INTO EXISTING MANHOLES SHALL BE AS SMALL AS PRACTICAL TO FACILITATE INSTALLING AND GROUTING THE NEW PIPE IN PLACE. WATERSTOP GASKETS SHALL BE USED WITH P.V.C. AND A.B.S. COMPOSITE PIPE. THE NEW PIPE SHALL BE GROUTED INTO THE OPENING USING AN APPROVED NONSHRINK GROUT FOR THE FULL MANHOLE WALL THICKNESS. THE EXTERIOR OF THE COMPLETED CONNECTION SHALL BE SEALED WITH AN APPROVED BITUMINOUS COATING SUCH THAT THE CONNECTION WILL BE WATER TIGHT. FLOWS OF MANHOLE SHALL BE MODIFIED TO FORM NEW FLOW CHANNEL FOR THE NEW CONNECTION AS INDICATED BY THE DRAWING. THE VERTICAL DROP FROM THE LOWER PIPE ON SUCH OUTSIDE DROP CONNECTIONS SHALL NOT EXCEED 4' FOR INFLOWING PIPES SIZED 12" OR SMALLER AND 2' FOR INFLOWING PIPES SIZED LARGER THAN 12", EXCEPT THE CROWN OF THE LOWER PIPE SHALL NEVER BE SET BELOW THE CROWN OF ANY LARGER OUTFLOWING PIPE. THIS WORK, INCLUDING MODIFICATION OF MANHOLE FLOOR, SHALL BE PAID FOR AT THE UNIT PRICE BID FOR OUTSIDE DROP STACK CONSTRUCTED ON EXISTING MANHOLE.

4. THE FLOORS OF ALL MANHOLES SHALL BE SHAPED WITH FLOW CHANNELS SUCH THAT THE MANHOLES WILL BE SELF CLEANING AND FREE OF AREAS WHERE SOLIDS COULD BE DEPOSITED AS SEWAGE FLOWS THROUGH THE MANHOLE FROM ALL INLET PIPES TO THE OUTLET PIPE. FLOW CHANNELS SHALL BE FORMED TO MATCH THE BOTTOM HALVES OF THE INFLOWING PIPES AND THE OUTFLOWING PIPE AS SHOWN BY THE DRAWINGS EXCEPT FOR INSIDE DROP MANHOLES. FLOW CHANNELS FOR INSIDE DROP MANHOLES SHALL BE CONSTRUCTED AS INDICATED BY THE DRAWING. MANHOLE FLOORS SHALL HAVE SLOPES OF .5 INCHES PER FOOT IN THE AREAS OUTSIDE OF THE FLOW CHANNELS SLOPED TOWARD THE FLOW CHANNELS. PIPES LAID THROUGH MANHOLES SHALL HAVE THE TOP HALF REMOVED TO SEAT LINES FOR THE FULL INSIDE DIAMETER OF THE MANHOLE. MANHOLE FLOORS SHALL THEN BE SHAPED AROUND THE BOTTOM HALF OF THE PIPE WHICH FORMS THE FLOW CHANNEL.

5. PIPES INSTALLED WITHIN THE EXCAVATION MADE FOR THE MANHOLE SHALL BE CRADLED WITH CONCRETE TO THE LIMITS OF THE MANHOLE EXCAVATION. WHEN CLAY PIPE IS USED, THE CRADLE SHALL EXTEND TO THE FIRST JOINT OUTSIDE THE MANHOLE. THE CRADLE SHALL BE TERMINATED AT THE CLAY PIPE JOINT IN A MANNER WHICH WILL MAINTAIN THE FLEXIBILITY OF THE JOINT. COST OF CRADLE WITHIN MANHOLE EXCAVATION OR TO CLAY PIPE JOINTS ADJACENT TO MANHOLE SHALL BE INCLUDED IN THE UNIT PRICE BID FOR THE MANHOLE.

6. MANHOLE COVER CASTINGS AND MANHOLE FRAME CASTINGS SHALL CONFORM TO THE REQUIREMENTS AS INDICATED IN THE STANDARD SPECIFICATIONS AND AS SHOWN IN THE STANDARD DETAIL DRAWING.

7. THE VERTICAL DROP IN INSIDE DROP MANHOLES SHALL NOT EXCEED 4' FOR INFLOWING PIPES SIZED 12" OR SMALLER AND 2' FOR INFLOWING PIPES LARGER THAN 12". THE CROWNS OF INFLOWING PIPES SHALL NEVER BE SET LOWER THAN THE CROWN OF THE OUTFLOWING PIPE.

8. STANDARD MANHOLES TYPE "A" AND STANDARD INSIDE DROP MANHOLES TYPE "A" SHALL BE BID AS STANDARD MANHOLES FOR THE TYPE AND DIAMETER INDICATED. OUTSIDE DROP MANHOLES TYPE "A" SHALL BE BID AS STANDARD OUTSIDE DROP MANHOLES FOR THE TYPE AND DIAMETER INDICATED. ALL MANHOLE DIAMETERS WILL BE 4' UNLESS INDICATED OTHERWISE.

BAUGHMAN COMPANY, P.A.
SURVEYING & ENGINEERING
316/262-7271 • 230 LAURA • WICHITA, KANSAS 67211

SEWER APPURTENANCES DETAILS

ADOPTED AS STANDARD DESIGN
BY

City of Wichita, Kansas

STANDARD MANHOLE TYPE "C"

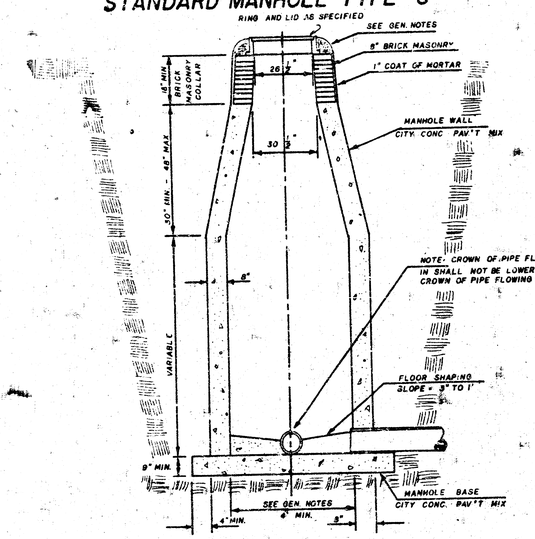

INSIDE DROP MANHOLE TYPE "C"

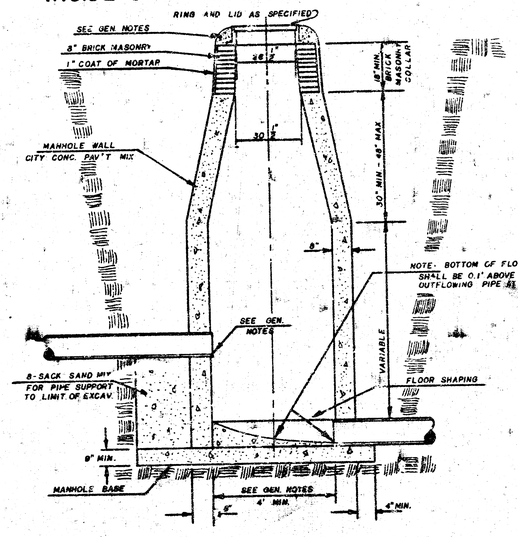

OUTSIDE DROP MANHOLE TYPE "C"

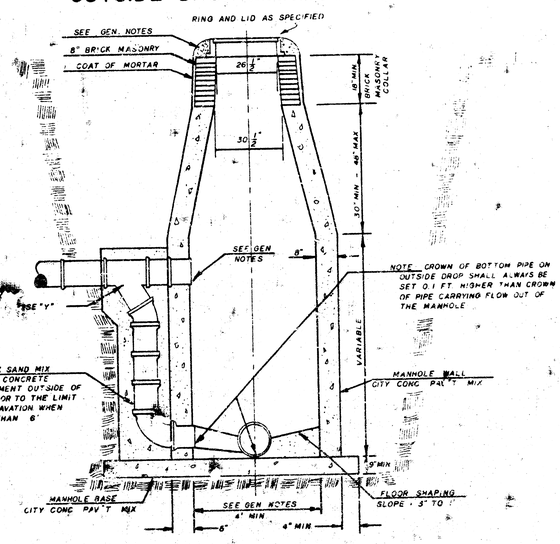

GENERAL NOTES

1. MORTAR USED IN MASONRY CONSTRUCTION SHALL CONTAIN 6 SACKS OF CEMENT PER CUBIC YARD. CONCRETE USED IN MANHOLE WALLS AND BASES SHALL CONFORM TO THE REQUIREMENTS OF CONCRETE FOR CONCRETE PAVEMENT CONSTRUCTION AS SPECIFIED IN THE CITY STANDARD PAVING SPECIFICATIONS USING CITY CONCRETE PAVEMENT MIX WITHOUT AIR ENTRAINING ADMIXTURE. MORTAR SHALL BE PLACED AROUND THE MANHOLE RING AS SHOWN ON THE DRAWINGS WHEN MANHOLES ARE CONSTRUCTED IN UNPAVED AREAS. TYPE "C" MANHOLES CAN BE CONSTRUCTED ONLY WHERE PIPE SIZES ARE 8" OR SMALLER. THE INSIDE DIAMETER OF TYPE "C" MANHOLES SHALL BE 4'. COMPLETED MANHOLE SHALL BE WITHOUT LEAKS AND WATER TIGHT.

2. REINFORCING STEEL SHALL BE INSTALLED IN THE MANHOLE BASE. REINFORCING STEEL SHALL CONSIST OF NO. 4 BARS PLACED ON 6" CENTERS IN BOTH DIRECTIONS. REINFORCING STEEL SHALL BE PLACED 6" ABOVE THE BOTTOM OF THE MANHOLE BASE. COST OF FURNISHING AND INSTALLING REINFORCING STEEL SHALL BE INCLUDED IN THE UNIT PRICE BID FOR THE MANHOLE.

3. AN OPENING SHALL BE CUT IN THE MANHOLE WALL FOR THE UPPER INLET PIPE FOR INSIDE AND OUTSIDE DROP MANHOLES. THE UPPER INLET PIPE SHALL BE GROUTED INTO THIS OPENING WITH NON-SHRINK GROUT. THE EXTERIOR OF THIS COMPLETED CONNECTION SHALL BE SEALED WITH AN APPROVED BITUMINOUS COATING SUCH THAT THE CONNECTION WILL BE WATER TIGHT.

4. THE FLOORS OF ALL MANHOLES SHALL BE SHAPED WITH FLOW CHANNELS SUCH THAT THE MANHOLES WILL BE SELF CLEANING AND FREE OF AREAS WHERE SOLIDS COULD BE DEPOSITED AS SEWAGE FLOWS THROUGH THE MANHOLE FROM ALL INLET PIPES TO THE OUTLET PIPE. FLOW CHANNELS SHALL BE FORMED FROM THE BOTTOM HALVES OF THE INFLOWING PIPES AND THE OUTFLOWING PIPE AS SHOWN ON THE DRAWINGS EXCEPT FOR INSIDE DROP MANHOLES. FLOW CHANNELS FOR INSIDE DROP MANHOLES SHALL BE CONSTRUCTED AS INDICATED BY THE DRAWING. MANHOLE FLOORS SHALL HAVE SLOPES OF 3 INCHES PER FOOT IN THE AREAS OUTSIDE OF THE FLOW CHANNELS SLOPED TOWARD THE FLOW CHANNELS. PIPES LAID THROUGH MANHOLES SHALL HAVE THE TOP HALF REMOVED TO NEAT LINES FOR THE FULL INSIDE DIAMETER OF THE MANHOLE. MANHOLE FLOORS SHALL THEN BE SHAPED AROUND THE BOTTOM HALF OF THE PIPE WHICH FORMS THE FLOW CHANNEL.

5. PIPES INSTALLED WITHIN THE EXCAVATION MADE FOR THE MANHOLE SHALL BE CRADLED WITH CONCRETE TO THE LIMITS OF THE MANHOLE EXCAVATION. WHEN CLAY PIPE IS USED, THE CRADLE SHALL EXTEND TO THE FIRST JOINT OUTSIDE THE MANHOLE. THE CRADLE SHALL BE TERMINATED AT THE CLAY PIPE JOINT IN A MANNER WHICH WILL MAINTAIN THE FLEXIBILITY OF THE JOINT. COST OF CRADLE WITHIN MANHOLE EXCAVATION OR TO CLAY PIPE JOINTS ADJACENT TO MANHOLE SHALL BE INCLUDED IN THE UNIT PRICE BID FOR THE MANHOLE.

6. MANHOLE COVER CASTINGS AND MANHOLE FRAME CASTINGS SHALL CONFORM TO THE REQUIREMENTS AS INDICATED IN THE STANDARD SPECIFICATIONS AND AS SHOWN IN THE STANDARD DETAIL DRAWING.

7. THE VERTICAL DROP IN INSIDE DROP MANHOLES SHALL NOT EXCEED 4' FOR INFLOWING PIPES SIZED 12" OR SMALLER AND 2' FOR INFLOWING PIPES LARGER THAN 12". THE CROWNS OF INFLOWING PIPES SHALL NEVER BE SET LOWER THAN THE CROWN OF THE OUTFLOWING PIPE.

8. STANDARD MANHOLES TYPE "C" AND STANDARD INSIDE DROP MANHOLES TYPE "C" SHALL BE BID AS STANDARD MANHOLES FOR THE TYPE AND DIAMETER INDICATED. OUTSIDE DROP MANHOLES TYPE "C" SHALL BE BID AS STANDARD OUTSIDE DROP MANHOLES FOR THE TYPE AND DIAMETER INDICATED. ALL MANHOLE DIAMETERS WILL BE 4' UNLESS INDICATED OTHERWISE.

JNL JAN. 1982

BAUGHMAN COMPANY, P.A.
SURVEYING & ENGINEERING
316/943-7271 • 330 LAMBA • WICHITA, KANSAS 67211

LATERAL 69, MAIN 17, SANITARY SEWER No. 22
INCLUDING LIFT STATION

Project no. 468-76-245-81255-000-000-001

RIVER WALK ADDITION

CITY OF WICHITA, KANSAS

MIKE LINDEBAK CITY ENGINEER

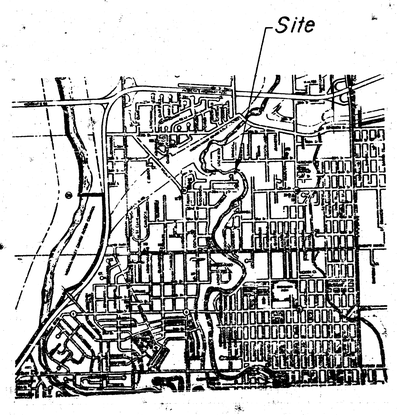

Location Map

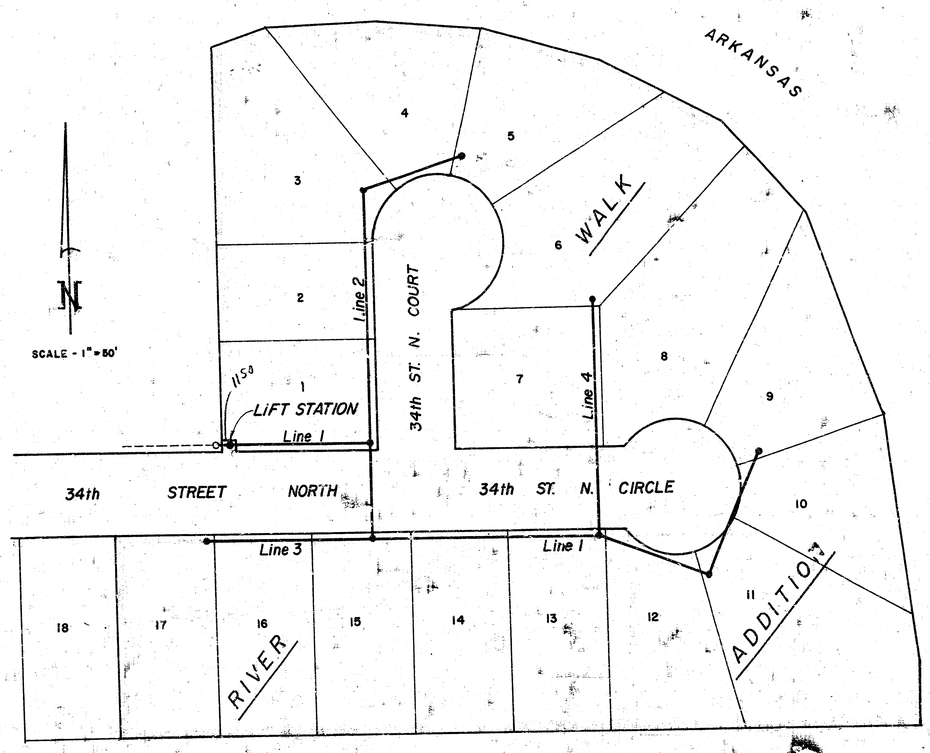

Rod
See me before
Booking this.
Chris

NOTE -

THE CONTRACTOR IS TO BE RESPONSIBLE FOR THE FEE COST TO GAS SERVICE CO. FOR THE METER [illegible] PUMP STATION LOCATION.

THE CONTRACTOR IS [illegible] FOR THE COST OF TWO SEPEPATE PHASE GENERA[illegible] ONE IS TO BE HOOKED UP WITH THE S[illegible] DELIVERED TO THE CITY OF WICHIT[illegible]



BAUGHMAN COMPANY, P.A.
SURVEYING & ENGINEERING
316/263-7371 • 330 LAURA • WICHITA, KANSAS 67211

FILMED FROM THE BEST

14 7 3 16

8/8

PRIVATE SANITARY SEWER EXTENSION
TO SERVE PART OF LOT 1, BLOCK 1, WOODLAWN PLACE, AN ADDITION TO WICHITA, SEDGWICK COUNTY, KANSAS.

THIS PROJECT TO BE CONSTRUCTED TO CITY OF WICHITA STANDARDS & SPECIFICATIONS

PRIVATE PROJECT NO.: 468-76-243-80000-000-000-008

NOTE TO CONTRACTOR
The project will be conducted under the supervision of the CITY ENGINEER and conform to the SPECIFICATIONS of the CITY OF WICHITA. The CONTRACTOR may obtain copies of the SPECIFICATIONS for all costs of inspection.

APPROVED AS NOTED
BY CITY ENGINEER OF WICHITA
Sanitary Sewers
Storm Sewers
Date Approved

DRAWN BY: LOWELL D. HIGH, L.S.
1542 S St FRANCIS

PROFILE
SHEET NO. 44
BOOK NO. 1
PAGE NO. 44
SURVEYED
PLOTTED
CHECKED BY
R.M.S. PROJECT NO. 1-76-243
SCALE: HOR. 1"=30' VERT. 1"=5'

PLAN
SURVEYED
PLOTTED
CHECKED BY
R.M.S. PROJECT NO. 1-76-243
SCALE: 1"=30'
SHEET NO. 44

EDGEMOOR DRIVE

"WOODLAWN PLACE"

PART OF LOT 1, BLOCK 1

CONSTRUCT 399 L.F. 8" PVC SEWER @ -0.70%

CONSTRUCT 293 L.F. 8" PVC PIPE @ -0.70%

EXISTING GROUND

FINISH GRADE

FIN. FL. 178.80

FIN. FL. 179.30

FIN. FL. 180.40

FIN. FL. 181.10

FIN. FL. 182.80

FIN. FL. 179.30

FIN. FL. 178.60

FIN. FL. 178.0

FIN. FL. 178.30

FIN. FL. 177.40

FIN. FL. 178.20

FIN. FL. 179.50

FIN. FL. 180.10

FIN. FL. 179.70

FIN. FL. 180.80

FIN. FL. 177.40

FIN. FL. 179.0

FIN. FL. 178.80

FIN. FL. 180.0

Remove & Replace Asphaltic Roadway (12 Sq. Yds.)

Proposed 8" Sewer Service Line

Existing 8" Sewer Line

Existing 20' Sewer Easement

Existing 15' Drainage Easement

Existing 20' Sewer Easement

Existing 10' Sewer Easement

Existing 20' Drainage