CONSTRUCTION PLANS
FOR
LATERAL 58, SANITARY SEWER NO. 23

NORTH WICHITA GARDENS
TO
THE CITY OF WICHITA, KANSAS

PROJECT NO. 468-76-245-81600-000-000-001

MICHAEL E. LINDEBAK, P. E. - CITY ENGINEER

GENERAL NOTES:

1. Underground utility service lines and overhead utility pole lines are to be adjusted as necessary by others prior to construction unless the plans specifically call for their adjustment by the Contractor. Existing utilities and their location, as shown on the plans, represent the best information obtainable for design. The Contractor will be required to work around existing utilities within the right-of-way which do not conflict with proposed construction.

2. A saw cut of at least one-half the depth of existing surface courses or one-fourth the depth of the existing total pavement thickness shall be provided at locations where proposed construction abuts an existing surface course or pavement for which partial removal of that surface or pavement is required. Sawed joint to facilitate removal within 3 feet (3') of existing joints will not be permitted and for such instances the limits of removal shall extend to the existing joint. Such saw cuts will not be paid for directly and this cost shall be considered as subsidiary to the removal of the surface or pavement.

3. Mailboxes within the limits of the project shall be removed and replaced by the Contractor as approved by the Engineer. Contractor will be required to make satisfactory provisions for mail delivery to properties affected by this project during its construction.

4. Trees and shrubs in public right-of-way which are in direct conflict with proposed new construction shall be removed by the Contractor with the Engineer's approval. Trees and shrubs which are not in direct conflict with proposed new construction shall be saved and protected from damage.

5. The Contractor shall give all property owners and/or tenants of developed property abutting the construction of this project a minimum of ten (10) days advance notice prior to start of construction.

6. The Contractor shall be responsible for preserving property irons. The Contractor will be required to re-establish any property irons which are damaged or destroyed by his construction operations. Such irons shall be re-established by a licensed land surveyor or a licensed professional engineer in accordance with state laws.

7. Pavement removal and/or replacement will be measured and paid for on the lineal foot basis as measured along the centerline of the sewer regardless of width or thickness. Minimum limits of such pavement removal and replacement shall be one foot beyond the limits of the excavation made for the sewer or the structure, except when the lines of removal are within three (3) feet of an existing joint the limits of removal shall be extended to the existing joint. Removal and replacement of existing pavement shall confora to the applicable sections of the City of Wichita Standard Specifications.

8. All disturbed grassed areas will be reseeded with the same grass as existing or grass which is acceptable to Property Owner. Payment for this work is incidental to Project Costs.

9. All work described in the Special Project Provisions shall be incidental to Project Costs.

10. Through traffic to be maintained at all times.

BENCH MARKS

1. B.M. 138.47 "□" Cut on S.W. Cor. square metal base of metal power pole S.W. Cor. 37TH & Hydraulic.(Record El. 138.470)

2. B.M. 142.63 (set) "□" Cut on N.W. Cor. North hub guard of RCB @ N. entrance to school service center.

3. B.M. 153.64 Std. City of Wichita disc North end E. hub guard of bridge on Hydraulic over big ditch. (Record El. 153.63 (USGS 1341.03))

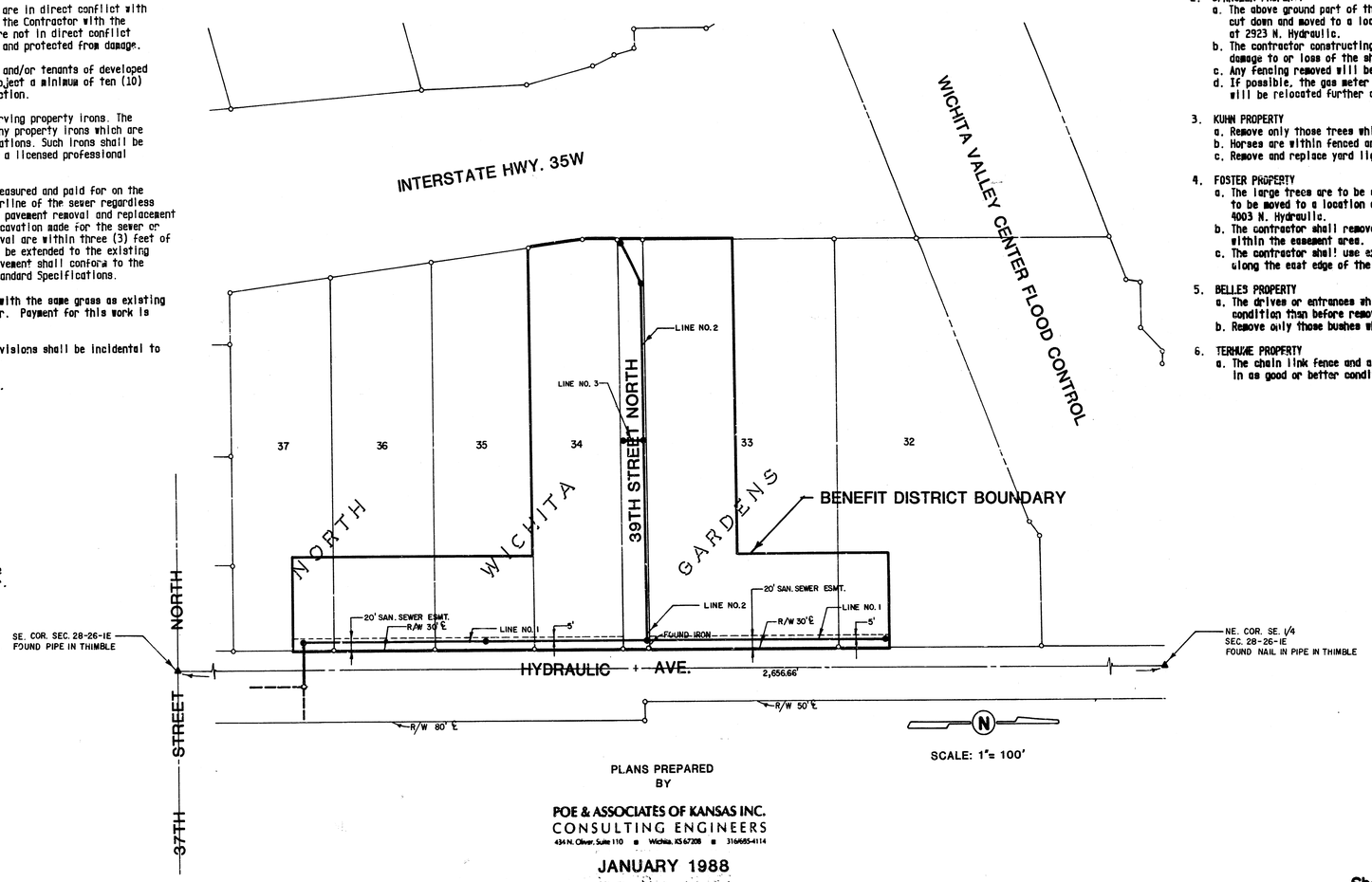

INDEX

TITLE SHEET	SHEET 1
LINE NO. 1	SHEET 2
LINE NO. 2 AND LINE NO. 3	SHEET 3
STANDARD MANHOLE TYPE "P"	SHEET 4
STANDARD MANHOLE TYPE "C"	SHEET 5

SPECIAL PROVISIONS

1. COOK PROPERTY
   a. The fence and driveway shall be removed and replaced in as good or better condition than before removal.

2. SPANGLER PROPERTY
   a. The above ground part of the large hackberry tree and the walnut tree are to be cut down and moved to a location designated by the Property Owner on the property at 2923 N. Hydraulic.
   b. The contractor constructing the sewer system is to use extreme care to avoid damage to or loss of the shrub hedge along the east edge of the easement.
   c. Any fencing removed will be replaced in as good or better condition as it now exists.
   d. If possible, the gas meter located at the north edge of the driveway entrance will be relocated further away from the driveway.

3. KUHN PROPERTY
   a. Remove only those trees which are necessary for construction of the sewer line.
   b. Horses are within fenced area. Contact owner before removing any fence.
   c. Remove and replace yard light in as good or better condition than before removal.

4. FOSTER PROPERTY
   a. The large trees are to be cut down and the above ground part of the trees are to be moved to a location designated by the Property Owner on the property at 4003 N. Hydraulic.
   b. The contractor shall remove the small five to six foot Locust tree located within the easement area.
   c. The contractor shall use extreme care to avoid damage of the shrubs located along the east edge of the easement.

5. BELLES PROPERTY
   a. The drives or entrances which are removed shall be replaced in as good or better condition than before removal.
   b. Remove only those bushes which are necessary for the construction of the sewer line.

6. TERHUNE PROPERTY
   a. The chain link fence and asphalt or gravel drives shall be removed and replaced in as good or better condition than before removal.

AS BUILT
R.D.C.
5-88

PLANS PREPARED
BY

POE & ASSOCIATES OF KANSAS INC.
CONSULTING ENGINEERS
434 N. Oliver, Suite 110 ■ Wichita, KS 67208 ■ 316/685-4114

JANUARY 1988

KENNY E. HILL
LICENSED
7690
KANSAS
PROFESSIONAL ENGINEER

STATE			FISCAL YEAR	SHEET NO	TOTAL SHEETS

PLAN — SURVEYED: DATE; PLOTTED: BY; ALIGNMENT CHECKED; PROFILE CHECKED; NOTE BOOK NO.; RE-DRAWN CHECKED

BENEFIT DISTRICT BOUNDARY

Cook 37 — Spangler 36 — Kuhn 35 — Kuhn 34 — Foster 33 — Belles 32 — Terhune

66' 33' 132' 165' 145' 80'

20' Sanitary Sewer Easement

LOT LINE

Sta. ~~0+68.0~~ 0+68.9
Constr. Std. M.H. Type ~~"S"~~ or "P"
Install 4" Stub N.W. F.L. 130.04
F.L. Out 129.70 F.L. In 129.80

Sta. 3+69.0
Constr. Std. M.H. Type ~~"S"~~ or "P"
F.L. 131.00

Sta. ~~10+22.1~~ 10+21.8
Constr. Std. M.H. Type ~~"S"~~ or "P"
Install 8" Stub N. F.L. 133.61
Install 4" Stub W. F.L. 133.95
F.L. 133.61

Line No. 1 — Line No. 2

39TH ST. NO.

HYDRAULIC AVENUE

6' CHAIN LINK FENCE — 24" HACKBERRY — 12' ASPHALT ENTRANCE — 8" WALNUT — HEDGE ROW — 10' GATE — 24" STUMP — 8" TREE — WOVEN WIRE FENCE — 2-15" TREES — END OF ASPHT. & CB. — GRAVEL ENT. — YARD LIGHT — 24" ELM — STREET SIGN — STOP SIGN — 18" STUMP — 6" TREE — TEL. & PP — 12' GRAVEL ENT. — 18" ELM — 12" ELM — BUSH — 36" STUMP — HOUSE — GM — ANCHORS — PP & TEL. RISER — PROP. IRON — 10' CONC. V.G. — 4- BUSHES — 10' ASPHALT ENT. — 3' FENCE — 15' ASPH. ENT. — ROW OF BUSHES — 30" TREE — 20' UNPAVED ENT. — 4' CH. LK. FENCE — 9' ASPH. ENT. — 18" CEDAR — 10' ASPH. ENT. — 2-GM — 10' RETAINING WALL — 12' ASPH. ENT. — 30" ELM — WOOD RET. WALL — ROCK RET. WALL — ANCHOR — B.O.C. — UGT — UGP — PP — WM — TEL. RISER — CB INLET — 24" ELM — 2" GAS LINE — 10" PINE — 18" CMP — BLOWOFF VALVE CAP — HDWL. — SANI. SEWER — MH — WV — 12" WATERLINE — 6" GAS LINE — 10' ASPHALT ENT. — ASPHALT PAVMT W. CB AND STR. ON W. SIDE — CONC. DRIVE — DOUBLE 10'x 5' RCB — CONC. LINED DITCH — ABANDONED P.P. — 24" CMP — EXIST. 12" WATER MAIN — END OF CURB & GUTTER — ASPHALT PAVEMENT (NO CB.) — STREET SIGN

Sta. 0+00 Line No. 1
Install 8" Pipe W.
Grout and Reshape Invert.
Incidental to Project Costs

DO NOT DAMAGE HEDGE

CAUTION
Double Circuit
12,000 Volt Power
Line

Sta. ~~6+26.1~~ 6+26.0 Line No. 1
Sta. 0+00 Line No. 2
Constr. Std. MH. Type ~~"S"~~ or "P"
F.L. Out S. 132.02
F.L. In W. 132.12
F.L. In N. 132.02

N

SCALE:
40 0 40 80
PLAN:
PROFILE: HORIZ. SAME AS ABOVE
VERT.

PROFILE — SURVEYED: BY; PLOTTED: DATE; CROSS SECTIONS CHECKED; B.M.'s NOTED; STRUCTURE NOTATIONS CHKD; NOTE BOOK NO.

145 140 135 130 125

Sta. 0+00 Line No. 1
Connect to Exist. Manhole
129.82 .40

Sta. 0+68.9 Line No. 1
Constr. Std. M.H. Type ~~"S"~~ or "P"
Top of M.H. Elev. 139.67
F.L. Out 129.74 .74
F.L. In 129.54 .54
129.82 .67

130.32 .17

130.22 .68

Sta. 3+69.0 Line No. 1
Constr. Std. M.H. Type ~~"S"~~ or "P"
Top of M.H. Elev. 140.56
131.00 130.86

131.32 .07

EXIST. GROUND PROFILE

8" Water Line
Top Elev. @ 136.50

131.52 .42

Sta. ~~6+26.1~~ 6+26.0 Line No. 1
Sta. 0+00.0 Line No. 2
Constr. Std. M.H. Type ~~"S"~~ or "P"
Top of M.H. Elev. 141.~~3~~ .09
131.82 .77
132.02 131.86 OUT
132.01 IN
Line No. 2
F.L. 132.12

132.32 .31

132.22 .70

133.12 .10

Sta. ~~10+22.1~~ 10+21.8 Line No. 1
Constr. Std. M.H. Type ~~"S"~~ or "P"
Top of M.H. Elev. 142.68
133.32 .50
133.81 .59

1022.1 L.F. 8" Pipe @ 0.4% Grade

0 1 2 3 4 5 6 7 8 9 10

POE & ASSOCIATES OF KANSAS INC.
CONSULTING ENGINEERS
434 N. Oliver, Suite 110 ■ Wichita, KS 67208 ■ 316/685-4114

DESIGNED BY K.H.
DRAWN BY P.V.
CHECKED BY
DATE JAN. 1988
SHEET 2 OF 5

CITY OF WICHITA, KANSAS
NORTH WICHITA GARDENS
LATERAL 58, SANITARY SEWER NO. 23
PROJECT NO. 468-76-245-81600-000-000-001

2/5

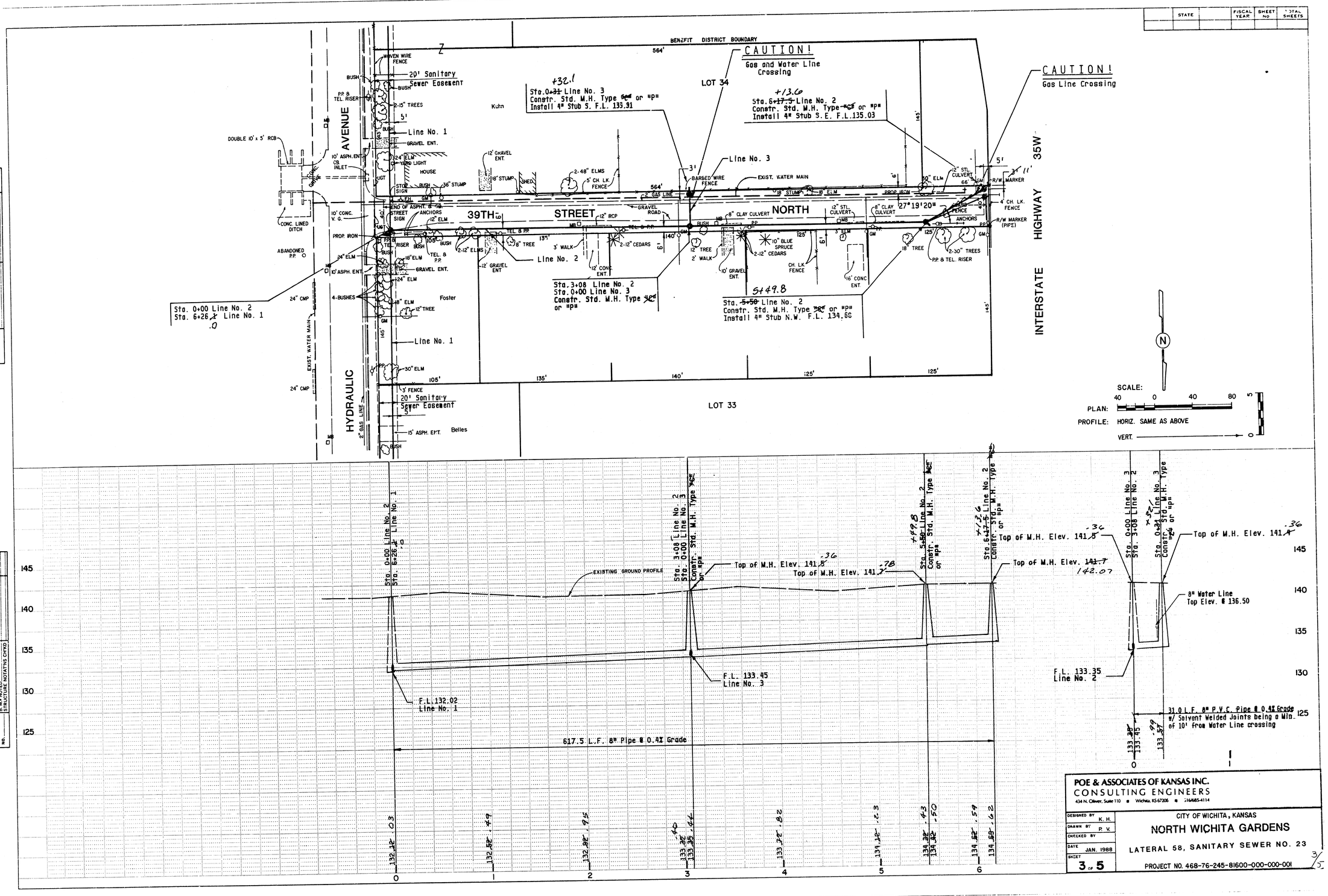

STATE		FISCAL YEAR	SHEET NO	TOTAL SHEETS

PLAN — SURVEYED, PLOTTED, ALIGNMENT CHECKED, RT. OF WAY CHECKED — NOTE BOOK NO. — BY — DATE

PROFILE — SURVEYED, PLOTTED, GRADES CHECKED, B.M. NOTED, STRUCTURE NOTATNS CHKD — NOTE BOOK NO. — BY — DATE

POE & ASSOCIATES OF KANSAS INC.
CONSULTING ENGINEERS
434 N. Oliver, Suite 110 ■ Wichita, KS 67206 ■ 316/685-4114

DESIGNED BY	K. H.
DRAWN BY	P. V.
CHECKED BY	
DATE	JAN. 1988
SHEET	3 OF 5

CITY OF WICHITA, KANSAS
NORTH WICHITA GARDENS
LATERAL 58, SANITARY SEWER NO. 23
PROJECT NO. 468-76-245-81600-000-000-001

SEWER APPURTENANCES DETAILS

ADOPTED AS STANDARD DESIGN BY CITY OF WICHITA

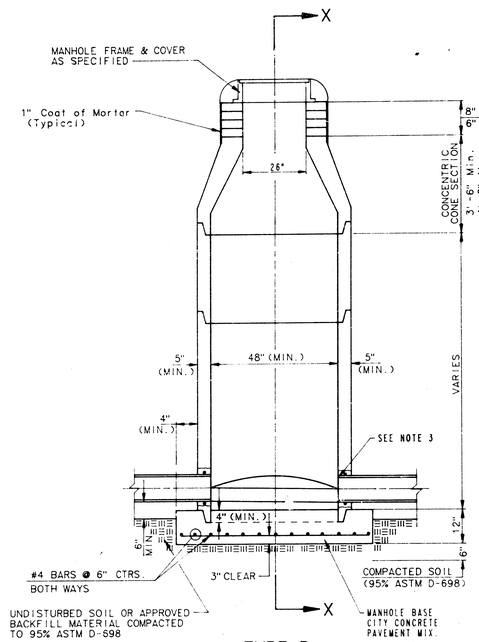

TYPE P
STANDARD MANHOLE

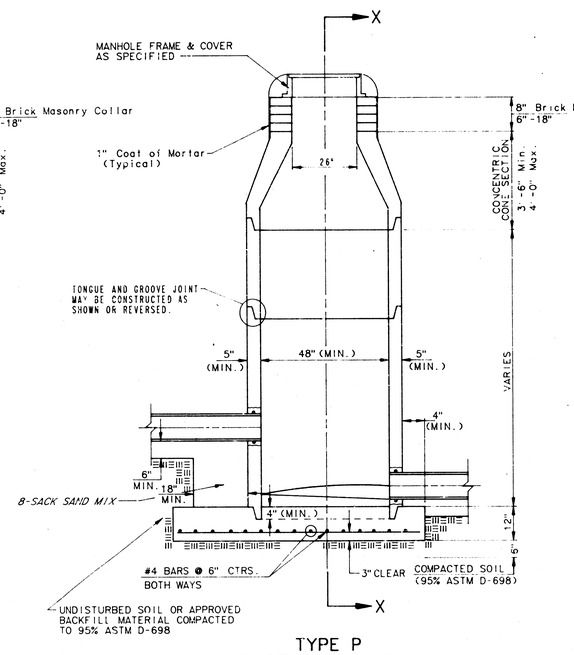

TYPE P
INSIDE DROP MANHOLE

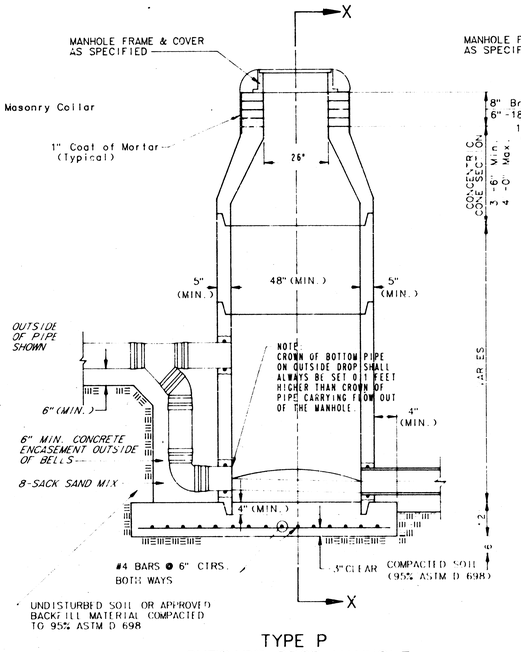

TYPE P
OUTSIDE DROP MANHOLE

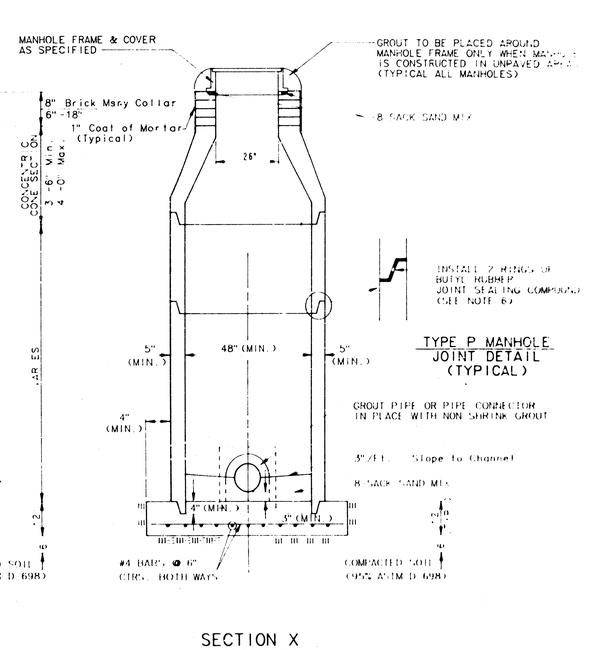

TYPE P MANHOLE
JOINT DETAIL
(TYPICAL)

SECTION X
(TYPICAL)

GENERAL NOTES

PRECAST MANHOLE NOTES

1. ALL PRECAST CONCRETE MANHOLE SECTIONS SHALL CONFORM TO THE LATEST REVISION OF A.S.T.M. C478 AS MODIFIED BY THE SPECIFICATIONS.
2. NON-SHRINK GROUT SHALL BE NON-METALLIC TYPE.
3. APPROVED FLEXIBLE WATERSTOP GASKETS SHALL BE INSTALLED TO JOIN THE SEWER TO THE MANHOLE WALL WHEN A.B.S. COMPOSITE PIPE OR P.V.C. PIPE IS USED. FOR OTHER TYPES OF PIPE THE SEWER SHALL BE GROUTED IN PLACE WITH NON-SHRINK GROUT. THE SEWER PIPE SHALL BE SUPPORTED WITH CONCRETE ENCASEMENT A MINIMUM OF 3 FEET FROM THE MANHOLE WALL AND TO THE FIRST JOINT FOR V.C.P. SUCH THAT THE JOINT REMAINS FLEXIBLE.
4. ALL INSIDE SURFACES OF THE CONCRETE MANHOLE WHICH WOULD BE EXPOSED TO SEWER GAS SHALL BE COATED WITH 2 COATS TNEMEC SERIES 66 HI-BUILD EPOXOLINE, DRY THICKNESS OF 8 MILS (MIN.)
5. EXTERIOR MANHOLE WALLS SHALL BE COATED WITH 1 COAT MOBILARMA 633 BITUMINUS COATING.
6. JOINT SEALING COMPOUND SHALL BE KENT SEAL NO. 2 OR APPROVED EQUAL.
7. PRECAST MANHOLES SHALL BE SET AT LEAST 4 INCHES INTO THE MANHOLE BASE.
8. TOP OF MANHOLE FLOOR SLAB SHALL BE AT LEAST 3 INCHES BELOW THE FLOW LINE OF THE OUTLET PIPE TO INSURE SUFFICIENT MINIMUM THICKNESS OF SHAPED INVERT.
9. LIFTING HOLES SHALL BE FILLED WITH NON-SHRINK GROUT AND THE INTERIOR SURFACE COATED AS SPECIFIED.
10. MORTAR USED IN MASONRY CONSTRUCTION SHALL CONTAIN 8 SACKS OF CEMENT PER CUBIC YARD. CONCRETE USED IN MANHOLE BASES SHALL CONFORM TO THE REQUIREMENTS OF CONCRETE FOR CONCRETE PAVEMENT CONSTRUCTION AS SPECIFIED IN THE CITY STANDARD PAVING SPECIFICATIONS USING CITY CONCRETE PAVEMENT MIX WITHOUT AIR ENTRAINING ADMIXTURE. MORTAR SHALL BE PLACED AROUND THE MANHOLE RING AS SHOWN ON THE DRAWINGS WHEN MANHOLES ARE CONSTRUCTED IN UNPAVED AREAS. MANHOLES CONSTRUCTED WHERE PIPE SIZES ARE SMALLER THAN 24" SHALL HAVE AN INSIDE DIAMETER OF 4'. MANHOLES CONSTRUCTED WHERE PIPE SIZES ARE 24" OR LARGER SHALL HAVE AN INSIDE DIAMETER OF 5'. COMPLETED MANHOLE SHALL BE WITHOUT LEAKS AND WATER TIGHT.
11. REINFORCING STEEL SHALL BE INSTALLED IN THE MANHOLE BASES AND SHALL CONSIST OF NO. 4 BARS PLACED ON 6" CENTERS IN BOTH DIRECTIONS. THE MANHOLE BASE REINFORCEMENT SHALL BE PLACED AT LEAST 3" ABOVE THE BOTTOM OF THE MANHOLE BASE. ALL COSTS FOR FURNISHING AND INSTALLING REINFORCING STEEL SHALL BE INCLUDED IN THE UNIT PRICE BID FOR THE MANHOLE.
12. OPENINGS SHALL BE CUT INTO THE MANHOLE WALL WHEN OUTSIDE DROPS ARE CONSTRUCTED ON EXISTING MANHOLES. SUCH OPENINGS CUT INTO EXISTING MANHOLES SHALL BE AS SMALL AS PRACTICAL TO FACILITATE INSTALLING AND GROUTING THE NEW PIPE IN PLACE. WATERSTOP GASKETS SHALL BE USED WITH P.V.C. AND A.B.S. COMPOSITE PIPE THE NEW PIPE SHALL BE GROUTED INTO THE OPENING USING AN APPROVED NONSHRINK GROUT FOR THE FULL MANHOLE WALL THICKNESS. THE EXTERIOR OF THE COMPLETED CONNECTION SHALL BE SEALED WITH AN APPROVED BITUMINOUS COATING SUCH THAT THE CONNECTION WILL BE WATER TIGHT. FLOOR OF MANHOLE SHALL BE MODIFIED TO FORM NEW FLOW CHANNEL FOR THE NEW CONNECTION AS INDICATED BY THE DRAWING. THIS WORK, INCLUDING MODIFICATION OF MANHOLE FLOOR, SHALL BE PAID FOR AT THE UNIT PRICE BID FOR OUTSIDE DROP STACK CONSTRUCTED ON EXISTING MANHOLE.
13. THE FLOORS OF ALL MANHOLES SHALL BE SHAPED WITH FLOW CHANNELS SUCH THAT THE MANHOLES WILL BE SELF CLEANING AND FREE OF AREAS WHERE SOLIDS COULD BE DEPOSITED AS SEWAGE FLOWS THROUGH THE MANHOLE FROM ALL INLET PIPES TO THE OUTLET PIPE. FLOW CHANNELS SHALL BE FORMED TO MATCH THE BOTTOM HALVES OF THE INFLOWING PIPES AND THE OUTFLOWING PIPE AS SHOWN BY THE DRAWINGS EXCEPT FOR INSIDE DROP MANHOLES. FLOW CHANNELS FOR INSIDE DROP MANHOLES SHALL BE CONSTRUCTED AS INDICATED BY THE DRAWING. MANHOLE FLOORS SHALL HAVE SLOPES OF 3 INCHES PER FOOT IN THE AREAS OUTSIDE OF THE FLOW CHANNELS SLOPED TOWARD THE FLOW CHANNELS. PIPES LAID THROUGH MANHOLES SHALL HAVE THE TOP HALF REMOVED TO NEAT LINES FOR THE FULL INSIDE DIAMETER OF THE MANHOLE. MANHOLE FLOORS SHALL THEN BE SHAPED AROUND THE BOTTOM HALF OF THE PIPE WHICH FORMS THE FLOW CHANNEL.
14. PIPES INSTALLED WITHIN THE EXCAVATION MADE FOR THE MANHOLE SHALL BE CRADLED WITH CONCRETE TO THE LIMITS OF THE MANHOLE EXCAVATION. WHEN CLAY PIPE IS USED, THE CRADLE SHALL EXTEND TO THE FIRST JOINT OUTSIDE THE MANHOLE. THE CRADLE SHALL BE TERMINATED AT THE CLAY PIPE JOINT IN A MANNER WHICH WILL MAINTAIN THE FLEXIBILITY OF THE JOINT. COST OF CRADLE WITHIN MANHOLE EXCAVATION OR TO CLAY PIPE JOINTS ADJACENT TO MANHOLE SHALL BE INCLUDED IN THE UNIT PRICE BID FOR THE MANHOLE.
15. MANHOLE COVER CASTINGS AND MANHOLE FRAME CASTINGS SHALL CONFORM TO THE REQUIREMENTS AS INDICATED IN THE STANDARD SPECIFICATIONS AND AS SHOWN IN THE STANDARD DETAIL DRAWING.
16. THE VERTICAL DROP IN INSIDE DROP MANHOLES SHALL NOT EXCEED 4' FOR INFLOWING PIPES SIZED 12" OR SMALLER AND 2' FOR INFLOWING PIPES LARGER THAN 12". THE CROWNS OF INFLOWING PIPES SHALL NEVER BE SET LOWER THAN THE CROWN OF THE OUTFLOWING PIPE.
17. STANDARD MANHOLES AND STANDARD INSIDE DROP MANHOLES SHALL BE BID AS STANDARD MANHOLES FOR THE TYPE AND DIAMETER INDICATED. OUTSIDE DROP MANHOLES SHALL BE BID AS STANDARD OUTSIDE DROP MANHOLES FOR THE TYPE AND DIAMETER INDICATED. ALL MANHOLE DIAMETERS WILL BE 4' UNLESS INDICATED OTHERWISE.
18. A BRICK MASONRY COLLAR SHALL BE INSTALLED BETWEEN THE CAST IRON FRAME AND THE CONCENTRIC CONE. THE COLLAR WILL HAVE 8" WALLS AND A VERTICAL HEIGHT OF 6" MINIMUM AND 18" MAXIMUM. A 1" COAT OF MORTAR WILL BE PLASTERED ON THE OUTSIDE OF THE COLLAR.

4/15

PROJECT NO. 468-76-245-81600-000-000-001

Received June 13 1996

[redacted]

SEWER APPURTENANCES DETAILS

ADOPTED AS STANDARD DESIGN
BY

City of Wichita, Kansas

STANDARD MANHOLE TYPE "C"

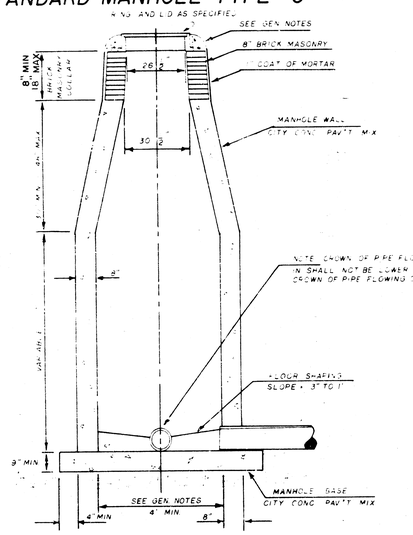

INSIDE DROP MANHOLE TYPE "C"

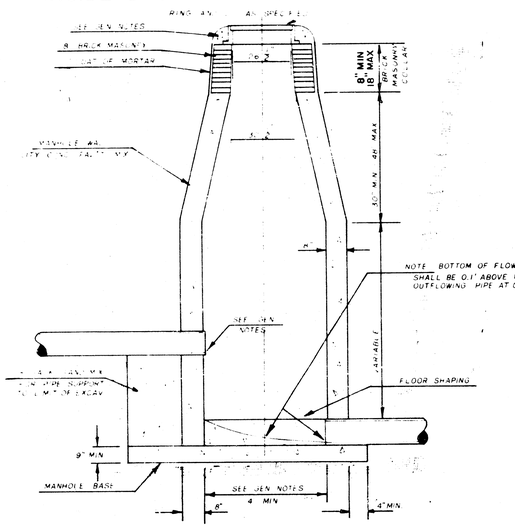

OUTSIDE DROP MANHOLE TYPE "C"

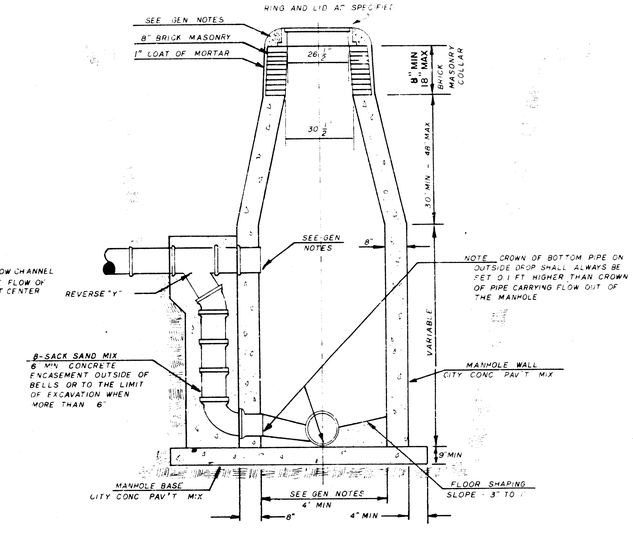

GENERAL NOTES

1. MORTAR USED IN MASONRY CONSTRUCTION SHALL CONTAIN 6 SACKS OF CEMENT PER CUBIC YARD. CONCRETE USED IN MANHOLE WALLS AND BASES SHALL CONFORM TO THE REQUIREMENTS OF CONCRETE FOR CONCRETE PAVEMENT CONSTRUCTION AS SPECIFIED IN THE CITY STANDARD PAVING SPECIFICATIONS USING CITY CONCRETE PAVEMENT MIX WITHOUT AIR ENTRAINING ADMIXTURE. MORTAR SHALL BE PLACED AROUND THE MANHOLE RING AS SHOWN ON THE DRAWINGS WHEN MANHOLES ARE CONSTRUCTED IN UNPAVED AREAS. TYPE "C" MANHOLES CAN BE CONSTRUCTED ONLY WHERE PIPE SIZED ARE 24" OR SMALLER. THE INSIDE DIAMETER OF TYPE "C" MANHOLES SHALL BE 4'. COMPLETED MANHOLE SHALL BE WITHOUT LEAKS AND WATER TIGHT.

2. REINFORCING STEEL SHALL BE INSTALLED IN THE MANHOLE BASE. REINFORCING STEEL SHALL CONSIST OF NO. 4 BARS PLACED ON 6" CENTERS IN BOTH DIRECTIONS. REINFORCING STEEL SHALL BE PLACED 4" ABOVE THE BOTTOM OF THE MANHOLE BASE. COST OF FURNISHING AND INSTALLING REINFORCING STEEL SHALL BE INCLUDED IN THE UNIT PRICE BID FOR THE MANHOLE.

3. AN OPENING SHALL BE CUT IN THE MANHOLE WALL FOR THE UPPER INLET PIPE FOR INSIDE AND OUTSIDE DROP MANHOLES. THE UPPER INLET PIPE SHALL BE GROUTED INTO THE OPENING WITH NON-SHRINK GROUT. THE EXTERIOR OF THE CONCRETE CONNECTION SHALL BE SEALED WITH AN APPROVED BITUMINOUS MATERIAL SUCH THAT THE CONNECTION WILL BE WATER TIGHT.

4. THE BASE OF ALL MANHOLES SHALL BE SHAPED WITH FLOW CHANNELS SUCH THAT THE MANHOLE WILL BE SELF CLEANING AND FREE OF AREAS WHERE SOLIDS CAN BE DEPOSITED AS SEWAGE FLOWS THROUGH THE MANHOLE FROM ENTERING PIPES TO THE OUTGOING PIPE. FLOW CHANNELS SHALL BE FORMED TO THE FULL DIAMETER OF THE INFLOWING PIPES AND THE OUTFLOWING PIPE. A MINIMUM DROP OF 0.1' SHALL EXIST IN INSIDE DROP MANHOLES. FLOW CHANNELS IN OUTSIDE DROP MANHOLES SHALL BE CONSTRUCTED AS INDICATED BY THE DRAWING. MANHOLE FLOORS SHALL HAVE SLOPES OF 3 INCHES PER FOOT IN THE AREAS OUTSIDE OF THE FLOW CHANNELS SLOPED TOWARD THE FLOW CHANNELS. PIPES LAID THROUGH MANHOLE SHALL HAVE THE TOP HALF REMOVED TO SEAT LINES FOR THE FULL INSIDE DIAMETER OF THE MANHOLE. MANHOLE FLOORS SHALL THEN BE SHAPED AROUND THE BOTTOM HALF OF THE PIPE WHICH FORMS THE FLOW CHANNEL.

5. PIPES INSTALLED WITHIN THE EXCAVATION MADE FOR THE MANHOLE SHALL BE CRADLED WITH CONCRETE TO THE LIMITS OF THE MANHOLE EXCAVATION. WHEN CLAY PIPE IS USED, THE CRADLE SHALL EXTEND TO THE FIRST JOINT OUTSIDE THE MANHOLE. THE CRADLE SHALL BE TERMINATED AT THE CLAY PIPE JOINT IN A MANNER WHICH WILL MAINTAIN THE FLEXIBILITY OF THE JOINT. COST OF CRADLE WITHIN MANHOLE EXCAVATION OR TO CLAY PIPE JOINTS ADJACENT TO MANHOLE SHALL BE INCLUDED IN THE UNIT PRICE BID FOR THE MANHOLE.

6. MANHOLE COVER CASTINGS AND MANHOLE FRAME CASTINGS SHALL CONFORM TO THE REQUIREMENTS AS INDICATED IN THE STANDARD SPECIFICATIONS AND AS SHOWN IN THE STANDARD DETAIL DRAWING.

7. THE VERTICAL DROP IN INSIDE DROP MANHOLES SHALL NOT EXCEED 4' FOR INFLOWING PIPES SIZED 12" OR SMALLER AND 2' FOR INFLOWING PIPES LARGER THAN 12". THE CROWNS OF INFLOWING PIPES SHALL NEVER BE SET LOWER THAN THE CROWN OF THE OUTFLOWING PIPE.

8. STANDARD MANHOLES TYPE "C" AND STANDARD INSIDE DROP MANHOLES TYPE "C" SHALL BE BID AS STANDARD MANHOLES FOR THE TYPE AND DIAMETER INDICATED. OUTSIDE DROP MANHOLES TYPE "C" SHALL BE BID AS STANDARD OUTSIDE DROP MANHOLES FOR THE TYPE AND DIAMETER INDICATED. ALL MANHOLE DIAMETERS WILL BE 4' UNLESS INDICATED OTHERWISE.

REVISED JAN 1982

PROJECT NO. 468-76-245-81600-000-000-001

5/5