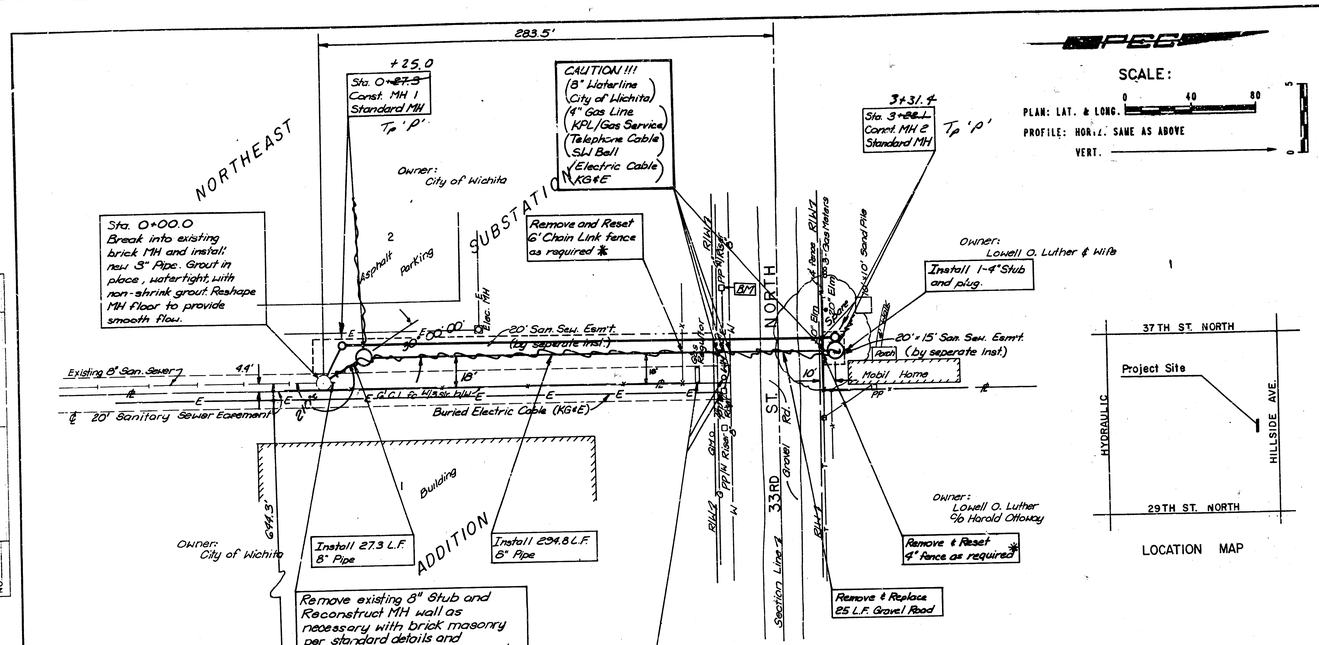
283.5'
+25.0
Sta. 0+87.9
Const. MH 1
Standard MH
Tp 'P'
CAUTION !!!
(8" Waterline City of Wichita)
(4" Gas Line KPL/Gas Service)
(Telephone Cable SW Bell)
(Electric Cable KG&E)
3+31.4
Sta. 3+88.1
Const. MH 2
Standard MH
Tp 'P'
NORTHEAST
SUBSTATION
Owner: City of Wichita
Sta. 0+00.0
Break into existing brick MH and install new 8" Pipe. Grout in place, watertight, with non-shrink grout. Reshape MH floor to provide smooth flow.
Remove and Reset 6' Chain Link fence as required *
2 Asphalt Parking
Elec. MH
F.F.=1100.00
20' San. Sew. Esmt. (by separate inst.)
Existing 8" San. Sewer
44'
18'
E
E
E

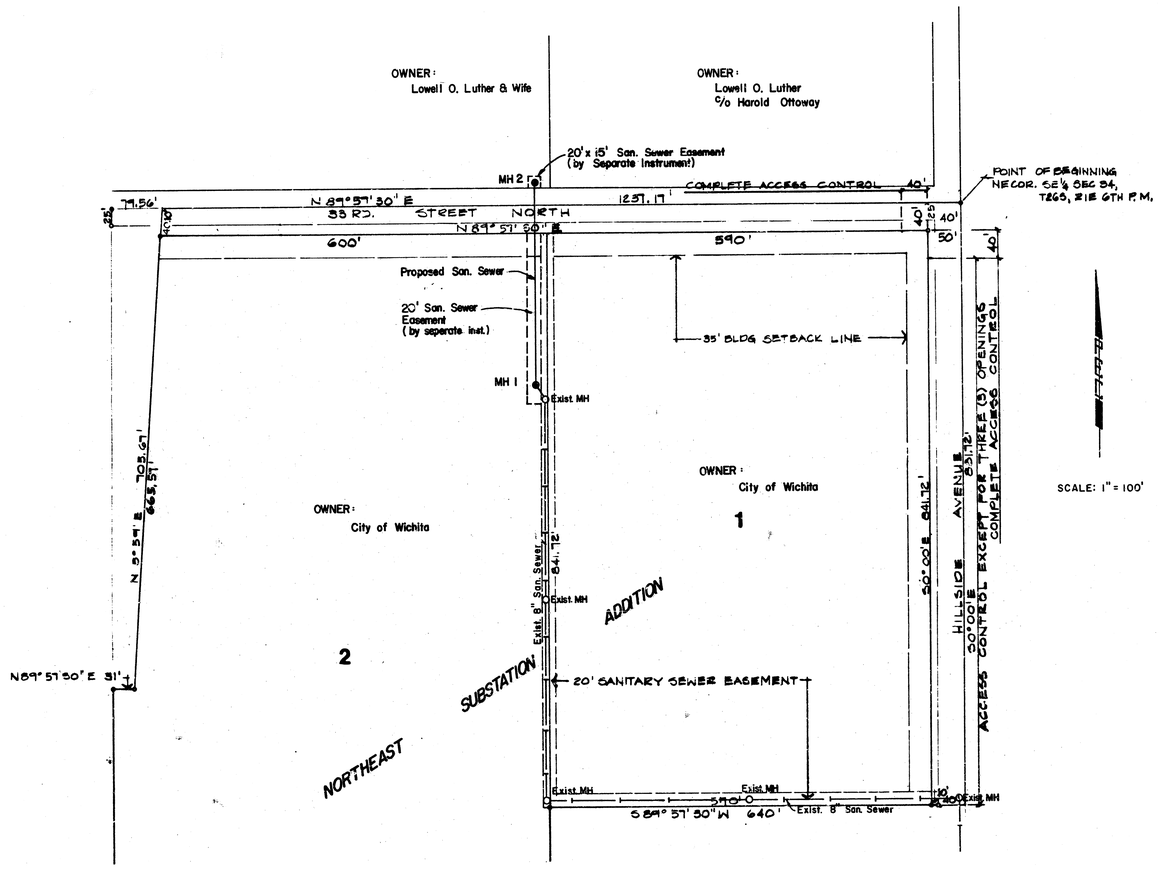

No.	Revision	By	Date

LATERAL 64
SANITARY SEWER NO. 24
KEY MAP & PLAT

MICHAEL E. LINDEBAK, P.E. CITY ENGINEER
CITY OF WICHITA PROJECT NO. 468-76-245-81884-000-000-001

PROFESSIONAL ENGINEERING CONSULTANTS, P.A.
ENGINEERS
WICHITA, KANSAS

Designed by MDS, RFJ	Job No. 34-8833G	Sht. 2 of 6
Drawn by TLS	Date June, 1988	

SEWER APPURTENANCES DETAILS

ADOPTED AS STANDARD DESIGN
BY

City of Wichita, Kansas

STANDARD MANHOLE TYPE "C"

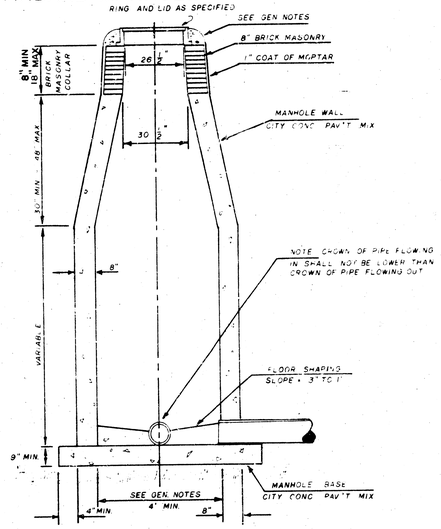

INSIDE DROP MANHOLE TYPE "C"

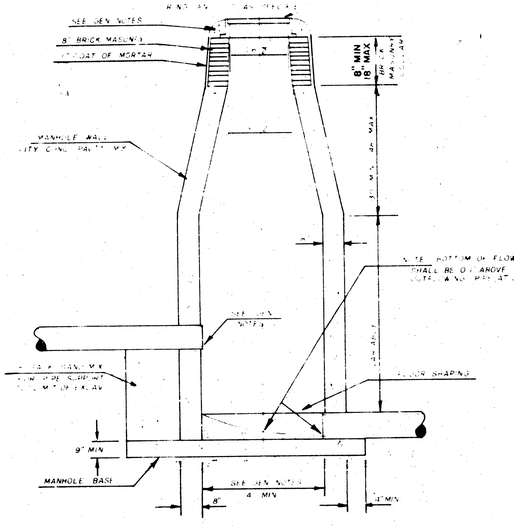

OUTSIDE DROP MANHOLE TYPE "C"

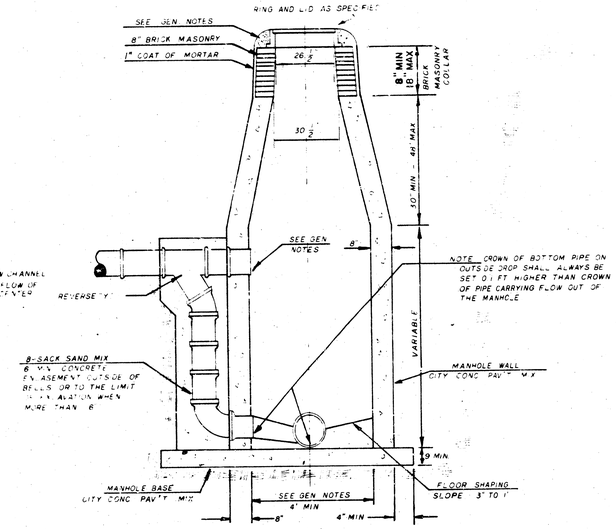

GENERAL NOTES

1. MORTAR USED IN MASONRY CONSTRUCTION SHALL CONTAIN 6 SACKS OF CEMENT PER CUBIC YARD. CONCRETE USED IN MANHOLE WALLS AND CRADLE SHALL CONFORM TO THE REQUIREMENTS OF CONCRETE FOR CONCRETE PAVEMENT CONSTRUCTION AS SPECIFIED IN THE CITY STANDARD PAVING SPECIFICATIONS USING CITY CONCRETE PAVEMENT MIX WITHOUT AIR ENTRAINING ADMIXTURES. MORTAR SHALL BE PLACED AROUND THE MANHOLE RING AS SHOWN ON THE DRAWINGS WHEN MANHOLES ARE CONSTRUCTED IN UNPAVED AREAS. TYPE "A" MANHOLES CAN BE CONSTRUCTED ONLY WHERE PIPE SIZES ARE 24" OR SMALLER. THE INSIDE DIAMETER OF TYPE "D" MANHOLES SHALL BE 4'. COMPLETED MANHOLE WALL SHALL BE WITHOUT LEAKS AND WATER TIGHT.

2. REINFORCING STEEL SHALL BE INSTALLED IN THE MANHOLE WALL. REINFORCING STEEL SHALL CONSIST OF NO. 4 BARS PLACED ON 6" CENTERS IN BOTH DIRECTIONS. REINFORCING STEEL SHALL BE PLACED 6" ABOVE THE BOTTOM OF THE MANHOLE BASE. COST OF FURNISHING AND INSTALLING REINFORCING STEEL SHALL BE INCLUDED IN THE UNIT PRICE BID FOR THE MANHOLE.

3. AN OPENING SHALL BE CUT IN THE MANHOLE WALL FOR THE UPPER INLET PIPE FLUSH WITH INSIDE AND JUST ABOVE MANHOLE BASE. THE UPPER INLET PIPE SHALL BE CONNECTED TO OPENING WITH NON-SHRINK GROUT. THE EXTERIOR OF CONNECTION SHALL BE SEALED WITH AN APPROVED BITUMEN TO INSURE THAT THE CONNECTION WILL BE WATER TIGHT.

4. THE FLOOR OF THE MANHOLE SHALL BE SHAPED WITH FLOW CHANNELS AND SLOPES SO THAT THE MANHOLE WILL BE SELF CLEANING AND FREE OF AREAS WHERE SOLIDS MAY BE DEPOSITED. A CRADLE FLOWS THROUGH THE MANHOLE FROM ALL INCOMING PIPES TO THE OUTLET PIPE. FLOW CHANNELS SHALL BE FORMED TO MAXIMUM HEIGHT AT THE SIDES OF THE MANHOLE AND THE OUTFLOWING CHANNEL SHALL BE OF THE SAME SIZE AS THE OUTLET PIPE. INSIDE DROP MANHOLES, FLOW CHANNELS FOR MANHOLES SHALL BE CONSTRUCTED AS INDICATED BY THE DRAWINGS. MANHOLE FLOOR SHALL HAVE SLOPE OF 1 INCHES PER FOOT IN THE AREAS OUTSIDE OF THE FLOW CHANNELS, SLOPED TOWARD THE FLOW CHANNEL. PIPE LAID THROUGH MANHOLE SHALL HAVE THE TOP HALF REMOVED TO NEAT LINES FOR THE FULL INSIDE DIAMETER OF THE MANHOLE. MANHOLE FLOORS SHALL THEN BE SHAPED AROUND THE BOTTOM HALF OF THE PIPE WHICH FORMS THE FLOW CHANNEL.

5. JOINTS INSTALLED WITHIN THE EXCAVATION MADE FOR THE MANHOLE SHALL BE CRADLED WITH CONCRETE TO THE LIMITS OF THE MANHOLE EXCAVATION. WHEN CLAY PIPE IS USED, THE CRADLE SHALL EXTEND TO THE FIRST JOINT OUTSIDE THE MANHOLE. THE CRADLE SHALL BE TERMINATED AT THE CLAY PIPE JOINT IN A MANNER WHICH WILL MAINTAIN THE FLEXIBILITY OF THE JOINT. COST OF PIPE OR JOINTS IN MANHOLE EXCAVATION OR TO CLAY PIPE JOINT ADJACENT TO MANHOLE SHALL BE INCLUDED IN THE UNIT PRICE BID FOR THE MANHOLE.

6. MEN AND COVER OF CAST IRON MANHOLE FRAME CASTING SHALL CONFORM TO THE REQUIREMENTS AS INDICATED IN THE STANDARD SPECIFICATIONS AND AS SHOWN ON THE STANDARD DETAIL DRAWING.

7. VERTICAL DROP IN INSIDE DROP MANHOLES SHALL NOT EXCEED 4'. PIPE ENTERING PIPE USED TO BE 12" OR SMALLER AND 24" FOR INCOMING PIPES LARGER THAN 24". THE CROWN OF INCOMING PIPE SHALL NEVER BE AT LOWER THAN THE CROWN OF THE OUTLET PIPE.

8. OUTSIDE MANHOLE TYPE "C" DROP CONNECTIONS ON MANHOLES TYPE "C" SHALL BE AS STANDARD MANHOLES FOR THE TYPE AND DIAMETER INDICATED. AT THE DROP MANHOLE TYPE "C" SHALL BE AS A STANDARD OUTSIDE DROP CONNECTION FOR THE TYPE AND DIAMETER INDICATED. ALL MANHOLE DIMENSIONS ARE TO BE AS NOTED UNLESS OTHERWISE.

JNL JAN. 1982

3/6

Sheet 3 of 6

FILMED FROM THE BEST AVAILABLE COPY

SEWER APPURTENANCES DETAILS

ADOPTED AS STANDARD DESIGN
BY

CITY OF WICHITA, KANSAS

TYPE "D" MANHOLE

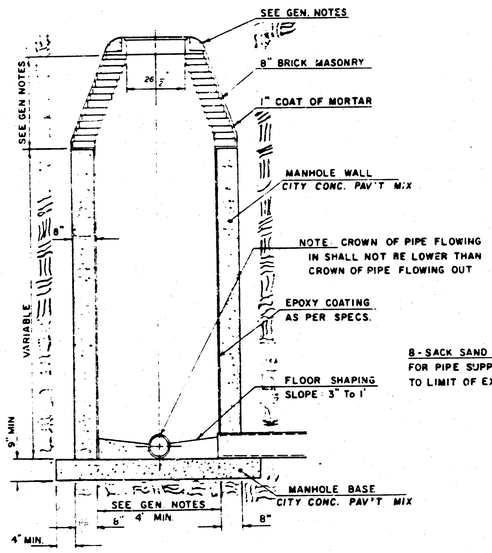

TYPE "D" INSIDE DROP MANHOLE

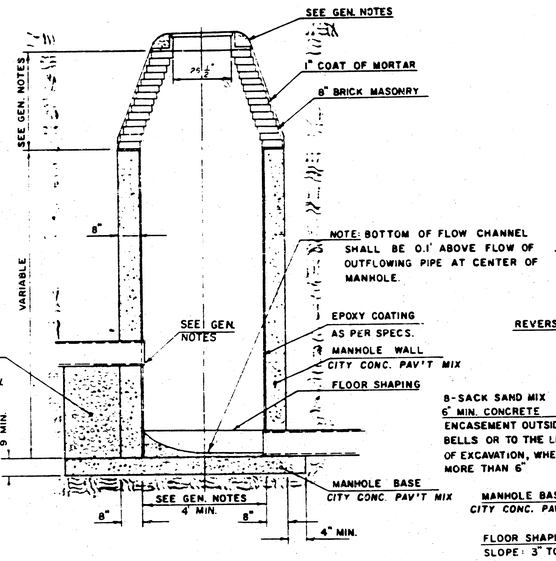

TYPE "D" OUTSIDE DROP MANHOLE

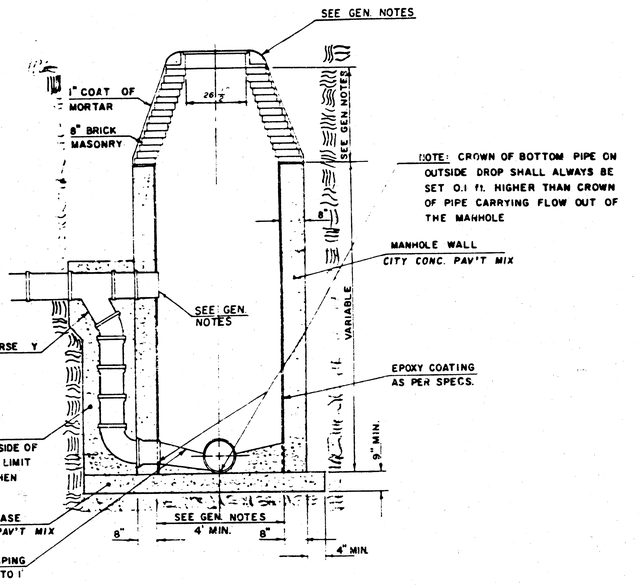

GENERAL NOTES

1. MORTAR USED IN MASONRY CONSTRUCTION SHALL CONTAIN 6 SACKS OF CEMENT PER CUBIC YARD. CONCRETE USED IN MANHOLE WALLS AND BASES SHALL CONFORM TO THE REQUIREMENTS OF CONCRETE FOR CONCRETE PAVEMENT CONSTRUCTION AS SPECIFIED IN THE CITY STANDARD PAVING SPECIFICATIONS USING CITY CONCRETE PAVEMENT MIX WITHOUT AEM ENTRAINING ADMIXTURE. MORTAR SHALL BE PLACED AROUND THE MANHOLE RING AS SHOWN ON THE DRAWINGS WHEN MANHOLES ARE CONSTRUCTED IN UNPAVED AREAS.

   ALL INSIDE SURFACES OF THE CONCRETE MANHOLE WALL WHICH WOULD BE EXPOSED TO SEWER GAS SHALL BE PROTECTED BY AN APPROVED EPOXY COATING. TYPE "D" MANHOLES MAY BE USED ON PIPE SIZES 8" TO 36" WHEN THE MANHOLE DEPTH EXCEEDS THE REQUIRED CORBEL HEIGHT BY 1' PLUS THE OUTSIDE DIAMETER OF THE LARGEST PIPE IN THE MANHOLE.

   MANHOLES CONSTRUCTED WHERE PIPE SIZES ARE SMALLER THAN 24" SHALL HAVE A DIAMETER OF 4'. MANHOLES CONSTRUCTED WHERE THE PIPE SIZES ARE 24" OR LARGER SHALL HAVE A DIAMETER OF 5'. THE HEIGHT OF THE CORBELS ON 4' DIAMETER MANHOLES SHALL BE 4'. MANHOLES HAVING A DIAMETER OF 5' SHALL HAVE CORBELS 6' IN HEIGHT. COMPLETED MANHOLE SHALL BE WITHOUT LEAKS AND WATER TIGHT.

2. REINFORCING STEEL SHALL BE INSTALLED IN THE MANHOLE BASE. REINFORCING STEEL SHALL CONSIST OF NO. 4 BARS PLACED ON 6" CENTERS IN BOTH DIRECTIONS. REINFORCING STEEL SHALL BE PLACED 6" ABOVE THE BOTTOM OF THE MANHOLE BASE. COST OF FURNISHING AND INSTALLING REINFORCING STEEL SHALL BE INCLUDED IN THE UNIT PRICE BID FOR THE MANHOLE.

3. AN OPENING SHALL BE CUT IN THE MANHOLE WALL FOR THE UPPER INLET PIPE FOR INSIDE AND OUTSIDE DROP MANHOLES. THE UPPER INLET PIPE SHALL BE GROUTED INTO THIS OPENING WITH NON-SHRINK GROUT. THE EXTERIOR OF THIS COMPLETED CONNECTION SHALL BE SEALED WITH AN APPROVED BITUMINOUS COATING SUCH THAT THE CONNECTION WILL BE WATER TIGHT. THE INTERIOR PLASTIC LINING SHALL BE SEALED AROUND THE INLET PIPE OPENING IN SUCH A MANNER THAT WILL EFFECTIVELY MAINTAIN THE INTEGRITY OF THE PROTECTIVE PLASTIC LINER.

4. THE FLOORS OF ALL MANHOLES SHALL BE SHAPED WITH FLOW CHANNELS SUCH THAT THE MANHOLES WILL BE SELF CLEANING AND FREE OF AREAS WHERE SOLIDS COULD BE DEPOSITED AS SEWAGE FLOWS THROUGH THE MANHOLE FROM ALL INLET PIPES TO THE OUTLET PIPE. FLOW CHANNELS SHALL BE FORMED TO MATCH THE BOTTOM HALVES OF THE INFLOWING PIPES AND THE OUTFLOWING PIPE AS SHOWN BY THE DRAWINGS EXCEPT FOR INSIDE DROP MANHOLES. FLOW CHANNELS FOR INSIDE DROP MANHOLES SHALL BE CONSTRUCTED AS INDICATED BY THE DRAWING. MANHOLE FLOORS SHALL HAVE SLOPES OF 3 INCHES PER FOOT IN THE AREAS OUTSIDE OF THE FLOW CHANNELS SLOPED TOWARD THE FLOW CHANNELS. PIPES LAID THROUGH MANHOLES SHALL HAVE THE TOP HALF REMOVED TO NEAT LINES FOR THE FULL INSIDE DIAMETER OF THE MANHOLE. MANHOLE FLOORS SHALL THEN BE SHAPED AROUND THE BOTTOM HALF OF THE PIPE WHICH FORMS THE FLOW CHANNEL.

5. PIPES INSTALLED WITHIN THE EXCAVATION MADE FOR THE MANHOLE SHALL BE CRADLED WITH CONCRETE TO THE LIMITS OF THE MANHOLE EXCAVATION. WHEN CLAY PIPE IS USED, THE CRADLE SHALL EXTEND TO THE FIRST JOINT OUTSIDE THE MANHOLE. THE CRADLE SHALL BE TERMINATED AT THE CLAY PIPE JOINT IN A MANNER WHICH WILL MAINTAIN THE FLEXIBILITY OF THE JOINT. COST OF CRADLE WITHIN MANHOLE EXCAVATION OR TO CLAY PIPE JOINTS ADJACENT TO MANHOLE SHALL BE INCLUDED IN THE UNIT PRICE BID FOR THE MANHOLE.

6. MANHOLE COVER CASTINGS AND MANHOLE FRAME CASTINGS SHALL CONFORM TO THE REQUIREMENTS AS INDICATED IN THE STANDARD SPECIFICATIONS AND AS SHOWN IN THE STANDARD DETAIL DRAWING.

7. THE VERTICAL DROP IN INSIDE DROP MANHOLES SHALL NOT EXCEED 4' FOR INFLOWING PIPES SIZED 12" OR SMALLER AND 2' FOR INFLOWING PIPES LARGER THAN 12". THE CROWNS OF INFLOWING PIPES SHALL NEVER BE SET LOWER THAN THE CROWN OF THE OUTFLOWING PIPE.

8. STANDARD MANHOLES TYPE "D" AND STANDARD INSIDE DROP MANHOLES TYPE "D" SHALL BE BID AS STANDARD MANHOLES FOR THE TYPE AND DIAMETER INDICATED. OUTSIDE DROP MANHOLES TYPE "D" SHALL BE BID AS STANDARD OUTSIDE DROP MANHOLES FOR THE TYPE AND DIAMETER INDICATED. ALL MANHOLE DIAMETERS WILL BE 4' UNLESS INDICATED OTHERWISE.

NOTE: EPOXY COATING ON INTERIOR CONCRETE SURFACES MAY BE DELETED WHEN TYPE "D" MANHOLES ARE CONSTRUCTED ON SEWERS WITH DIAMETERS SMALLER THAN 10".

APRIL 1987

FILMED FROM THE BEST AVAILABLE COPY

SEWER APPURTENANCES DETAILS
ADOPTED AS STANDARD DESIGN
BY
CITY OF WICHITA

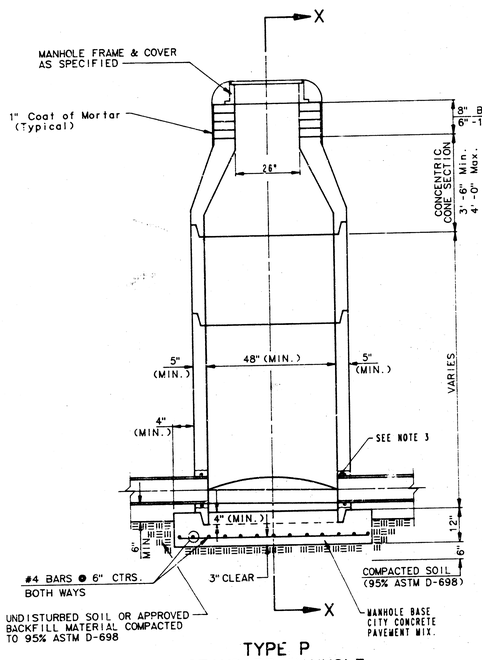

TYPE P
STANDARD MANHOLE

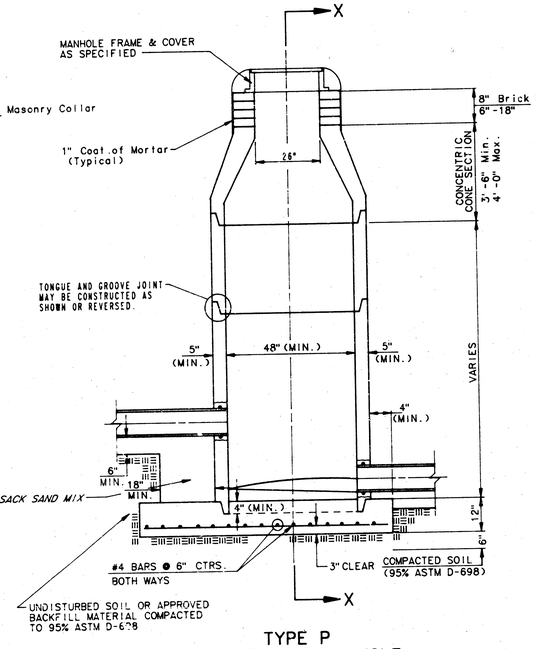

TYPE P
INSIDE DROP MANHOLE

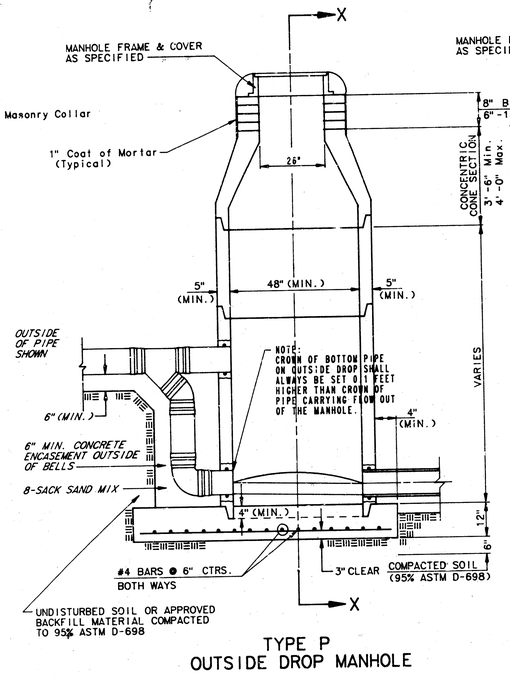

TYPE P
OUTSIDE DROP MANHOLE

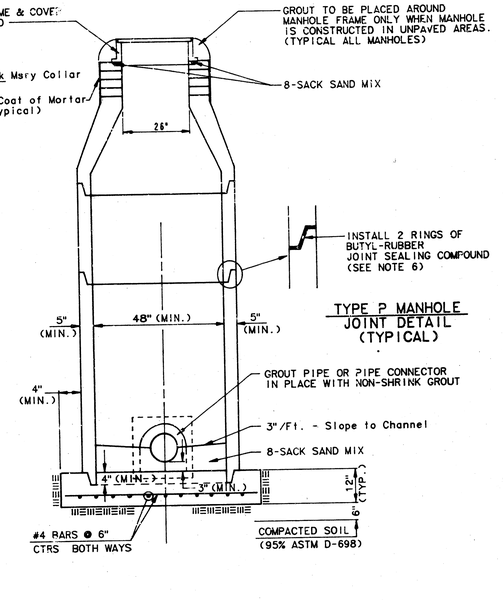

TYPE P MANHOLE
JOINT DETAIL
(TYPICAL)

SECTION X
(TYPICAL)

GENERAL NOTES

PRECAST MANHOLE NOTES

1. ALL PRECAST CONCRETE MANHOLE SECTIONS SHALL CONFORM TO THE LATEST REVISION OF A.S.T.M. C478 AS MODIFIED BY THE SPECIFICATIONS.
2. NON-SHRINK GROUT SHALL BE NON-METALLIC TYPE.
3. APPROVED FLEXIBLE WATERSTOP GASKETS SHALL BE INSTALLED TO JOIN THE SEWER TO THE MANHOLE WALL WHEN A.B.S. COMPOSITE PIPE OR P.V.C. PIPE IS USED. FOR OTHER TYPES OF PIPE THE SEWER SHALL BE GROUTED IN PLACE WITH NON-SHRINK GROUT. THE SEWER PIPE SHALL BE SUPPORTED WITH CONCRETE ENCASEMENT A MINIMUM OF 3 FEET FROM THE MANHOLE WALL AND TO THE FIRST JOINT FOR V.C.P. SUCH THAT THE JOINT REMAINS FLEXIBLE.
4. ALL INSIDE SURFACES OF THE CONCRETE MANHOLE WHICH WOULD BE EXPOSED TO SEWER GAS SHALL BE COATED WITH 2 COATS TNEMEC SERIES 46 HI-BUILD EPOXOLINE, DRY THICKNESS OF 8 MILS (MIN.)
5. EXTERIOR MANHOLE WALLS SHALL BE COATED WITH 1 COAT MOBILARMA 633 BITUMINUS COATING.
6. JOINT SEALING COMPOUND SHALL BE KENT SEAL NO. 2 OR APPROVED EQUAL.
7. PRECAST MANHOLES SHALL BE SET AT LEAST 4 INCHES INTO THE MANHOLE BASE.
8. TOP OF MANHOLE FLOOR SLAB SHALL BE AT LEAST 3 INCHES BELOW THE FLOW LINE OF THE OUTLET PIPE TO INSURE SUFFICIENT MINIMUM THICKNESS OF SHAPED INVERT.
9. LIFTING HOLES SHALL BE FILLED WITH NON-SHRINK GROUT AND THE INTERIOR SURFACE COATED AS SPECIFIED.
10. MORTAR USED IN MASONRY CONSTRUCTION SHALL CONTAIN 8 SACKS OF CEMENT PER CUBIC YARD. CONCRETE USED IN MANHOLE BASES SHALL CONFORM TO THE REQUIREMENTS OF CONCRETE FOR CONCRETE PAVEMENT CONSTRUCTION AS SPECIFIED IN THE CITY STANDARD PAVING SPECIFICATIONS USING CITY CONCRETE PAVEMENT MIX WITHOUT AIR ENTRAINING ADMIXTURE. MORTAR SHALL BE PLACED AROUND THE MANHOLE RING AS SHOWN ON THE DRAWINGS WHEN MANHOLES ARE CONSTRUCTED IN UNPAVED AREAS. MANHOLES CONSTRUCTED WHERE PIPE SIZES ARE SMALLER THAN 24" SHALL HAVE AN INSIDE DIAMETER OF 4'. MANHOLES CONSTRUCTED WHERE PIPE SIZES ARE 24" OR LARGER SHALL HAVE AN INSIDE DIAMETER OF 5'. COMPLETED MANHOLE SHALL BE WITHOUT LEAKS AND WATER TIGHT.
11. REINFORCING STEEL SHALL BE INSTALLED IN THE MANHOLE BASES AND SHALL CONSIST OF NO. 4 BARS PLACED ON 6" CENTERS IN BOTH DIRECTIONS. THE MANHOLE BASE REINFORCEMENT SHALL BE PLACED AT LEAST 3" ABOVE THE BOTTOM OF THE MANHOLE BASE. ALL COSTS FOR FURNISHING AND INSTALLING REINFORCING STEEL SHALL BE INCLUDED IN THE UNIT PRICE BID FOR THE MANHOLE.
12. OPENINGS SHALL BE CUT INTO THE MANHOLE WALL WHEN OUTSIDE DROPS ARE CONSTRUCTED ON EXISTING MANHOLES. SUCH OPENINGS CUT INTO EXISTING MANHOLES SHALL BE AS SMALL AS PRACTICAL TO FACILITATE INSTALLING AND GROUTING THE NEW PIPE IN PLACE. WATERSTOP GASKETS SHALL BE USED WITH P.V.C. AND A.B.S. COMPOSITE PIPE. THE NEW PIPE SHALL BE GROUTED INTO THE OPENING USING AN APPROVED NONSHRINK GROUT FOR THE FULL MANHOLE WALL THICKNESS. THE EXTERIOR OF THE COMPLETED CONNECTION SHALL BE SEALED WITH AN APPROVED BITUMINOUS COATING SUCH THAT THE CONNECTION WILL BE WATER TIGHT. FLOOR OF MANHOLE SHALL BE MODIFIED TO FORM NEW FLOW CHANNEL FOR THE NEW CONNECTION AS INDICATED BY THE DRAWINGS. THIS WORK, INCLUDING MODIFICATION OF MANHOLE FLOOR, SHALL BE PAID FOR AT THE UNIT PRICE BID FOR OUTSIDE DROP STACK CONSTRUCTED ON EXISTING MANHOLE.
13. THE FLOORS OF ALL MANHOLES SHALL BE SHAPED WITH FLOW CHANNELS SUCH THAT THE MANHOLES WILL BE SELF CLEANING AND FREE OF AREAS WHERE SOLIDS COULD BE DEPOSITED AS SEWAGE FLOWS THROUGH THE MANHOLE FROM ALL INLET PIPES TO THE OUTLET PIPE. FLOW CHANNELS SHALL BE FORMED TO MATCH THE BOTTOM HALVES OF THE INFLOWING PIPES AND THE OUTFLOWING PIPE AS SHOWN BY THE DRAWINGS EXCEPT FOR INSIDE DROP MANHOLES. FLOW CHANNELS FOR INSIDE DROP MANHOLES SHALL BE CONSTRUCTED AS INDICATED BY THE DRAWING. MANHOLE FLOORS SHALL HAVE SLOPES OF 3 INCHES PER FOOT IN THE AREAS OUTSIDE OF THE FLOW CHANNELS SLOPED TOWARD THE FLOW CHANNELS. PIPES LAID THROUGH MANHOLES SHALL HAVE THE TOP HALF REMOVED TO NEAT LINES FOR THE FULL INSIDE DIAMETER OF THE MANHOLE. MANHOLE FLOORS SHALL THEN BE SHAPED AROUND THE BOTTOM HALF OF THE PIPE WHICH FORMS THE FLOW CHANNEL.
14. PIPES INSTALLED WITHIN THE EXCAVATION MADE FOR THE MANHOLE SHALL BE CRADLED WITH CONCRETE TO THE LIMITS OF THE MANHOLE EXCAVATION. WHEN CLAY PIPE IS USED, THE CRADLE SHALL EXTEND TO THE FIRST JOINT OUTSIDE THE MANHOLE. THE CRADLE SHALL BE TERMINATED AT THE CLAY PIPE JOINT IN A MANNER WHICH WILL MAINTAIN THE FLEXIBILITY OF THE JOINT. COST OF CRADLE WITHIN MANHOLE EXCAVATION OR TO CLAY PIPE JOINTS ADJACENT TO MANHOLE SHALL BE INCLUDED IN THE UNIT PRICE BID FOR THE MANHOLE.
15. MANHOLE COVER CASTINGS AND MANHOLE FRAME CASTINGS SHALL CONFORM TO THE REQUIREMENTS AS INDICATED IN THE STANDARD SPECIFICATIONS AND AS SHOWN IN THE STANDARD DETAIL DRAWING.
16. THE VERTICAL DROP IN INSIDE DROP MANHOLES SHALL NOT EXCEED 4' FOR INFLOWING PIPES SIZED 12" OR SMALLER AND 2' FOR INFLOWING PIPES LARGER THAN 12". THE CROWNS OF INFLOWING PIPES SHALL NEVER BE SET LOWER THAN THE CROWN OF THE OUTFLOWING PIPE.
17. STANDARD MANHOLES AND STANDARD INSIDE DROP MANHOLES SHALL BE BID AS STANDARD MANHOLES FOR THE TYPE AND DIAMETER INDICATED. OUTSIDE DROP MANHOLES SHALL BE BID AS STANDARD OUTSIDE DROP MANHOLES FOR THE TYPE AND DIAMETER INDICATED. ALL MANHOLE DIAMETERS WILL BE 4' UNLESS INDICATED OTHERWISE.
18. A BRICK MASONRY COLLAR SHALL BE INSTALLED BETWEEN THE CAST IRON FRAME AND THE CONCENTRIC CONE. THE COLLAR WILL HAVE 8" WALLS AND A VERTICAL HEIGHT OF 6" MINIMUM AND 18" MAXIMUM. A 1" COAT OF MORTAR WILL BE PLASTERED ON THE OUTSIDE OF THE COLLAR.

5/6

Sheet 5 of 6

Revised: June 12, 1986

FILMED FROM THE BEST AVAILABLE COPY

MANHOLE FRAME AND COVER DETAIL

ADOPTED AS STANDARD DESIGN

BY

City of Wichita, Kansas

MANHOLE COVER

Weight: 180 Lbs.

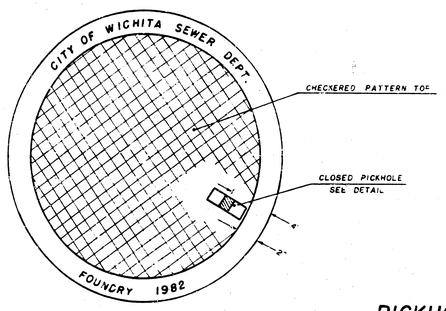

TOP VIEW

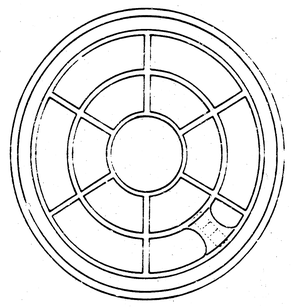

BOTTOM VIEW

PICKHOLE DETAIL

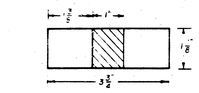

TOP VIEW

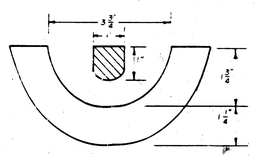

SECTION VIEW

MANHOLE FRAME

Weight: 240 Lbs.

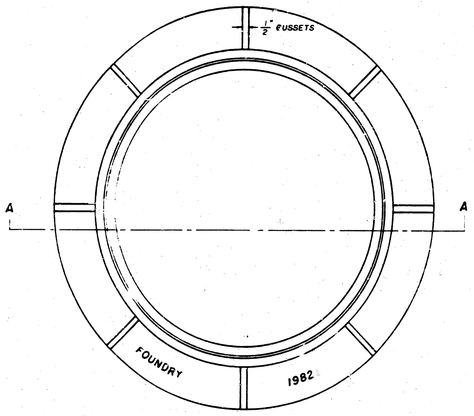

TOP VIEW

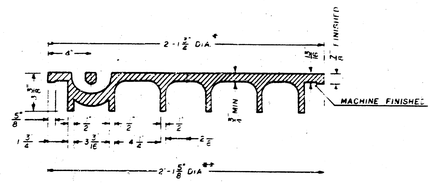

SECTION VIEW

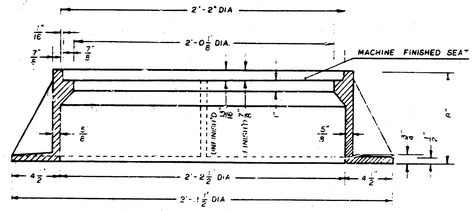

SECTION A-A

* OUTSIDE DIA TOP OF COVER
** OUTSIDE DIA BOTTOM OF COVER

GENERAL NOTES

1. MANHOLE CASTINGS SHALL BE MANUFACTURED USING GOOD QUALITY GRAY IRON CONFORMING TO CLASS 30 OF A.S.T.M. DESIGNATION A-48. DIMENSIONS AND WEIGHTS SHOWN ON THE DETAILED DRAWINGS SHALL BE CONSIDERED AS MINIMUM REQUIREMENTS AND ANY DEVIATIONS FROM THE DIMENSIONS SHOWN MUST BE SPECIFICALLY APPROVED. THE FINISHED CASTINGS SHALL BE OF UNIFORM QUALITY, FREE FROM BLOWHOLES, POROSITY, HARD SPOTS, SHRINKAGE DISTORTIONS OR OTHER DEFECTS.

2. MANHOLE CASTINGS SHALL BE COATED WITH AN ASPHALT PAINT RESULTING IN A SMOOTH, TOUGH AND TENACIOUS COATING WHICH IS NOT BRITTLE OR TACKY.

3. MANHOLE CASTINGS SHALL BE MANUFACTURED SUCH THAT A COVER MANUFACTURED BY ANY ONE FOUNDRY WILL FIT INTERCHANGEABLY INTO A FRAME MANUFACTURED BY ANOTHER FOUNDRY AND STILL MEET ALLOWABLE CLEARANCES AND NON-ROCKING REQUIREMENTS. THIS WILL REQUIRE MANUFACTURING OF THE MATCHING FACES ON THE COVER AND THE FRAME TO CLOSE TOLERANCES.

4. THE OUTSIDE CIRCUMFERENCE OF THE VERTICAL FACE OF THE COVER AND THE INSIDE CIRCUMFERENCE OF THE VERTICAL FACE IN THE FRAME RECESS SHALL BE MANUFACTURED TO TOLERANCES SUCH THAT THE CLEARANCE BETWEEN THE COVER AND FRAME WILL NOT EXCEED 1/8" AT ANY POINT AROUND THE CIRCUMFERENCE OF THE COVER. THE SEATING SURFACES BETWEEN THE COVER AND FRAME SHALL BE MACHINED SUCH THAT THESE SURFACES SHALL MAKE FULL CONTACT FOR THEIR FULL CIRCUMFERENCE TO PRECLUDE THE COVER FROM ROCKING IN THE FRAME.

5. THE MANHOLE FRAME AND COVER SHALL BE MARKED WITH LETTERING INDICATING THE NAME OF THE MANUFACTURER AND THE YEAR WHEN THE COVER OR FRAME WAS CAST. THE COVER SHALL BE FURTHER IDENTIFIED WITH REGARDS TO OWNERSHIP USING LETTERS AT LEAST 1" IN HEIGHT. THIS IDENTIFICATION SHALL BE "CITY OF WICHITA SEWER DEPARTMENT". THE WORD DEPARTMENT MAY BE ABBREVIATED. THE TEXTURE OF THE TOP SURFACE OF THE COVER SHALL BE MANUFACTURED IN A CHECKERED PATTERN DESIGN AS INDICATED ON THE DRAWINGS. SMOOTH BLOCKOUTS SHALL BE UTILIZED TO HIGHLIGHT THE LETTERING ON THE COVER SURFACE. THE TOTAL AREA OF SMOOTH SURFACE BLOCKOUT SHALL NOT EXCEED THE AREA AS INDICATED ON THE DRAWING. POSITIONING OF SMOOTH BLOCKOUTS AND LETTERING MAY VARY FROM THAT SHOWN ON THE DETAILED DRAWING.

JHL DEC. 1981

6/6

FILMED FROM THE BEST AVAILABLE COPY