SANITARY SEWER PLANS

SANITARY SEWER LATERAL 77, SAN. SEWER 23

INDUSTRIAL AIR CENTER (PHASE 2)

PROJECT NO.

468-82229

INDEX CODE: 741389
CITY OF WICHITA, KANSAS
MICHAEL E. LINDEBAK, CITY ENGINEER

1. THE CONTRACTOR SHALL BE RESPONSIBLE FOR PRESERVING PROPERTY IRONS. THE CONTRACTOR WILL BE REQUIRED TO RE-ESTABLISH ANY PROPERTY IRONS WHICH ARE DAMAGED OR DESTROYED BY HIS CONSTRUCTION OPERATIONS. SUCH IRONS SHALL BE RE-ESTABLISHED BY A LICENSED LAND SURVEYOR IN ACCORDANCE WITH STATE LAWS.

2. EXISTING UTILITIES AND THEIR LOCATIONS, AS SHOWN ON THE PLANS REPRESENT THE BEST INFORMATION OBTAINABLE FOR DESIGN. LOCATION INFORMATION HAS BEEN OBTAINED FROM THE VARIOUS UTILITY COMPANIES AND IS EITHER FROM COMPANY RECORD DRAWINGS OR COMPANY PROVIDED FIELD LOCATIONS. THE PLAN LOCATIONS SHOWN ARE NOT GUARANTEED. ADDITIONAL EXISTING UTILITIES MAY ALSO BE ENCOUNTERED.

3. CONTRACTOR WILL BE REQUIRED TO PROVIDE A MINIMUM ADVANCE NOTICE OF FORTY-EIGHT (48) HOURS TO UTILITY COMPANIES PRIOR TO STARTING ANY EXCAVATION AS FOLLOWS:

KANSAS ONE-CALL	1-800-344-7233 or 687-2470 (LOCAL WICHITA)

THE CONTRACTOR MUST NOTIFY THE FOLLOWING IN CASE OF AN EMERGENCY:

SOUTHWESTERN BELL TELEPHONE COMPANY	1-571-2115
CABLEVISION	262-4270 or 263-2061
KANSAS GAS & ELECTRIC	264-1141
CITY OF WICHITA SEWER MAINTENANCE	268-4071
ARKLA GAS COMPANY	942-8350 OR 263-8161
CITY OF WICHITA WATER DEPARTMENT	268-4908

4. RUBBLE FROM THE REMOVAL OF MISCELLANEOUS STRUCTURES AND EXCESS EXCAVATION WHICH IS TO BE WASTED SHALL BE DISPOSED OF ON SITES TO BE PROVIDED BY THE CONTRACTOR. THESE SITES SHALL BE APPROVED BY THE ENGINEER AS TO SUITABILITY, APPEARANCE AND SITE LOCATION. LOCATIONS THAT, IN THE OPINION OF THE ENGINEER, WILL LEAVE AN UNSIGHTLY APPEARANCE WILL NOT BE APPROVED. ALL DIPOSAL SITES MUST BE APPROVED BY THE KANSAS DEPARTMENT OF HEALTH AND ENVIRONMENT. MATERIAL EITHER STOCKPILED OR DISPOSED OF IN A FLOOD PLAIN WOULD REQUIRE A KANSAS STATE BOARD OF AGRICULTURE PERMIT. ANY MATERIAL DUMPED IN WATERS OF THE UNITED STATES OR WETLANDS IS SUBJECT TO U.S. CORPS OF ENGINEERS PERMITTING REGULATIONS. ANY MATERIAL BURIED OR STOCKPILED BEYOND APPROVED CONSTRUCTION LIMITS WOULD REQUIRE ADDITIONAL ARCHAEOLOGICAL INVESTIGATIONS UNLESS BURIED IN A PREVIOUSLY APPROVED BORROW LOCATION.

5. COST OF EXCAVATION, HAULING, AND DUMPING OF EXCESS EXCAVATION SHALL BE SUBSIDIARY TO THE PROJECT.

6. A PORTION OF EXCESS EXCAVATED MATERIAL SHALL BE MOUNDED AROUND MANHOLES WHICH EXTEND MORE THAN ONE (1) FOOT ABOVE THE EXISTING GROUND. SUCH MOUNDS SHALL BE CONSTRUCTED WITH A SIX (6) FOOT DIAMETER FLAT TOP WITH 4 TO 1 SIDE SLOPES DOWN TO THE ORIGINAL GROUND. THE ELEVATION OF THE FLAT TOP OF THE MOUND SHALL BE 0.4 FOOT BELOW THE TOP OF THE MANHOLE.

7. ALL STUBS AND PLUGGED PIPES SHALL BE LOCATED WITH GREEN PLASTIC TAPE IN THE SAME MANNER AS RISERS.

8. PRIOR TO LAYING SEWER LINES USING EXISTING STUBS IN EXISTING MANHOLES, THE CONTRACTOR SHALL EXPOSE AND VERIFY THE ELEVATION, GRADE AND ALIGNMENT OF EXISTING STUBS AND NOTIFY THE ENGINEER OF ANY DEVIATION FROM THE PLAN. WHERE CONNECTION TO AN EXISTING MANHOLE THAT DOES NOT HAVE AN EXISTING STUB OR THE STUB IS UNUSABLE DUE TO ELEVATION GRADE OR ALIGNMENT, THE CONTRACTOR SHALL RESHAPE THE EXISTING MANHOLE INVERT TO PROVIDE SMOOTH FLOW. THE COST OF RESHAPING EXISTING MANHOLE INVERTS IS INCIDENTAL TO THE PROJECT.

9. TREES AND SHRUBS IN PUBLIC RIGHT-OF-WAY WHICH ARE IN DIRECT CONFLICT WITH PROPOSED NEW CONSTRUCTION SHALL BE REMOVED BY THE CONTRACTOR WITH THE ENGINEER'S APPROVAL. TREES AND SHRUBS WHICH ARE NOT IN DIRECT CONFLICT WITH PROPOSED NEW CONSTRUCTION SHALL BE SAVED AND PROTECTED FROM DAMAGE.

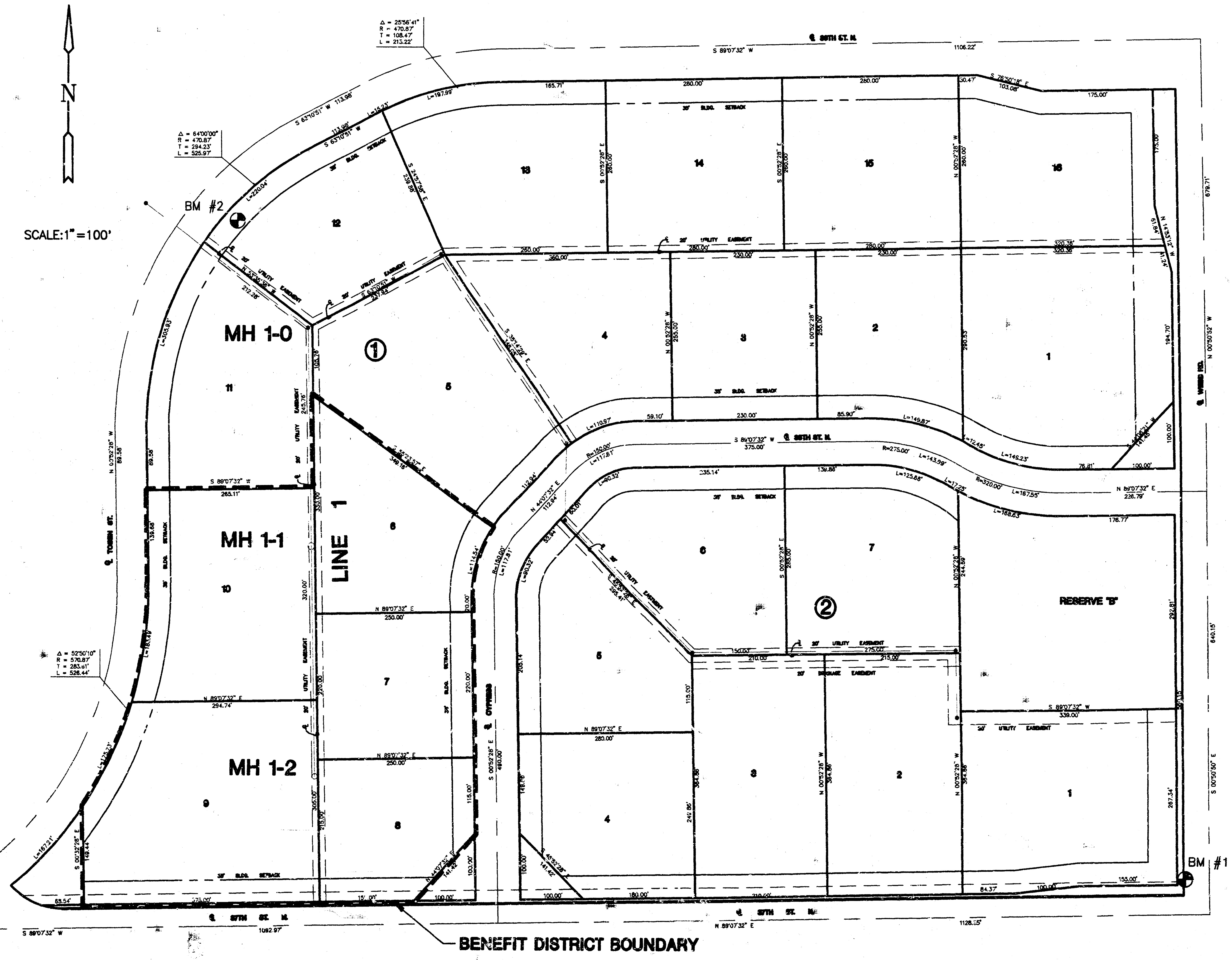

SHEET NO.	DESCRIPTION
1	TITLE SHEET
2	LINE 1 PLAN & PROFILE
3	SEWER APPURTENANCES DETAILS
4	FINAL PLAT

GREGORY J. ALLISON
11159

Booked 7-21-93
JKB
From As Builts

BM #1 CITY OF WICHITA BM DISC 53' N 38' W OF CENTERLINE 37TH ST. N AND WEBB ROAD.

ELEV. = 227.52 CITY DATUM

BM #2 CHISELED "□" ON CENTERLINE W SIDE OF THE MIDDLE INLET OF 3 AT THE NW CORNER OF LOT 12, BLOCK 1, INDUSTRIAL AIR CENTER.

ELEV. = 224.96 CITY DATUM

INDUSTRIAL AIR CENTER SANITARY SEWER PLANS

Design	JTC
Drawn by	JTC
Checked by	DSS
Date	1/93
Job no.	SAN1
Sheet	1
Of	4

MID-KANSAS ENGINEERING CONSULTANTS INC.
3500 NORTH ROCK ROAD
BUILDING #800
WICHITA, KANSAS 67226
(316) 636-5566

92-18-100-B

INDUSTRIAL AIR CENTER
SANITARY SEWER PLANS
LAT. 77, SAN. SEW. NO. 23
PROJECT NO. 468-82229

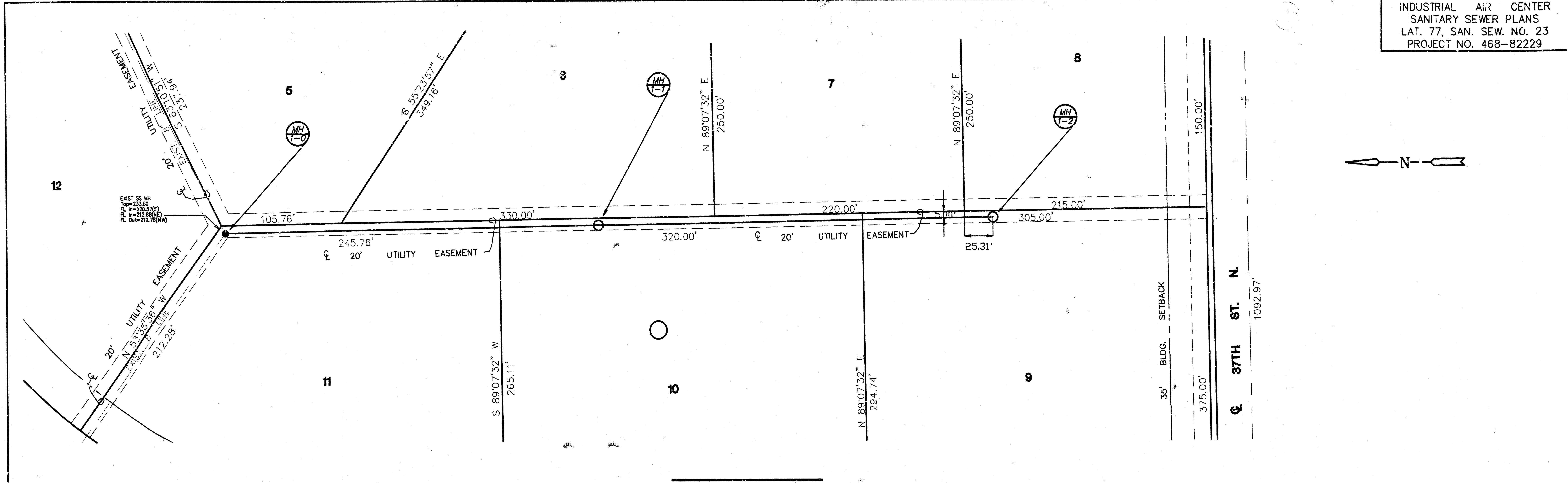

5
3
7
8
12
11
10
9
MH 1-0
MH 1-1
MH 1-2
20' UTILITY EASEMENT
EXIST. 8" LINE S 63°10'51" W 237.94'
EXIST SS MH
Top=233.80
FL In=220.57(S)
FL In=212.88(NE)
FL Out=212.78(NW)
20' UTILITY EASEMENT
N 53°35'36" W EXIST. 8" LINE 212.28'
S 55°23'57" E 349.16'
105.76'
245.76'
330.00'
℄ 20' UTILITY EASEMENT
N 89°07'32" E 250.00'
320.00'
220.00'
℄ 20' UTILITY EASEMENT
N 89°07'32" E 250.00'
5.00'
25.31'
215.00'
305.00'
S 89°07'32" W 265.11'
N 89°07'32" E 294.74'
35' BLDG. SETBACK
150.00'
375.00'
℄ 37TH ST. N.
1092.97'
N

SCALE: 1"=40'

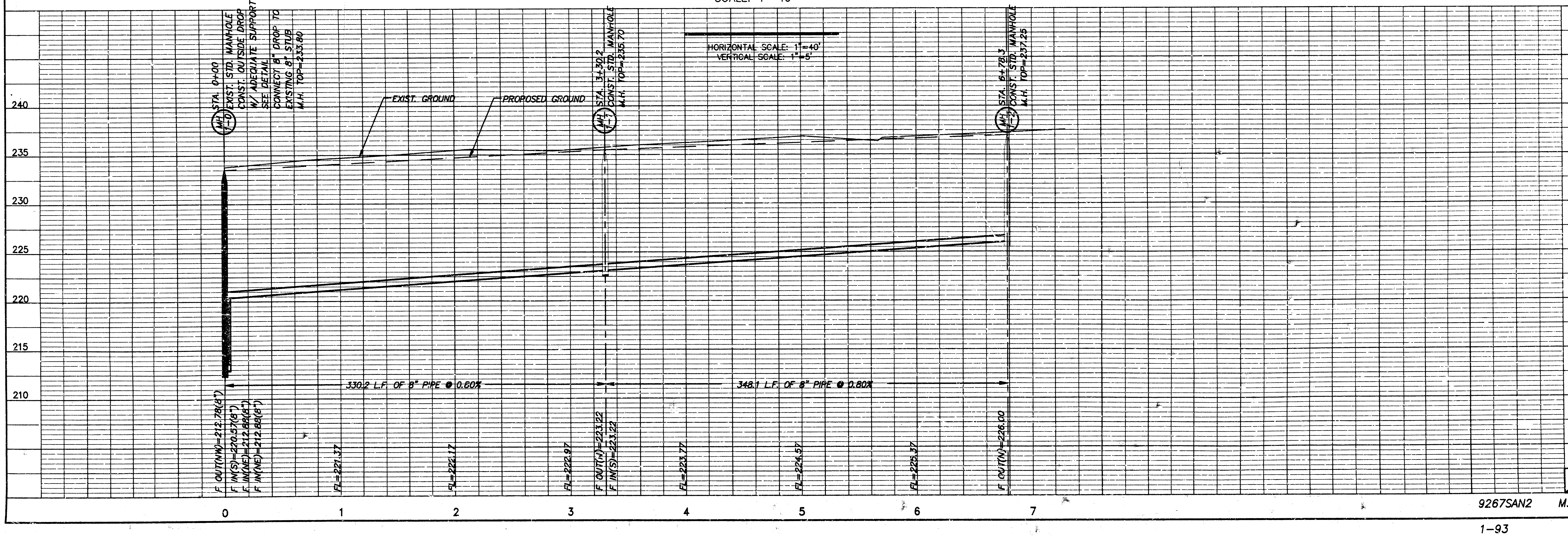

HORIZONTAL SCALE: 1"=40'
VERTICAL SCALE: 1"=5'
MH 1-0 STA. 0+00
EXIST. STD. MANHOLE
CONST. OUTSIDE DROP
W/ ADEQUATE SUPPORT
SEE DETAIL
CONNECT 8" DROP TO
EXISTING 8" STUB
M.H. TOP=233.80
EXIST. GROUND
PROPOSED GROUND
MH 1-1 STA. 3+30.2
CONST. STD. MANHOLE
M.H. TOP=235.70
MH 1-2 STA. 6+78.3
CONST. STD. MANHOLE
M.H. TOP=237.25
240
235
230
225
220
215
210
330.2 L.F. OF 8" PIPE @ 0.80%
348.1 L.F. OF 8" PIPE @ 0.80%
F OUT(NW)=212.78(8")
F IN(S)=220.57(8")
F IN(NE)=212.88(8")
F IN(NE)=212.88(8")
FL=221.37
FL=222.17
FL=222.97
F OUT(N)=223.22
F IN(S)=223.22
FL=223.77
FL=224.57
FL=225.37
F OUT(N)=226.00
0
1
2
3
4
5
6
7

2/4

9267SAN2 M.K.E.C.

1-93

SEWER APPURTENANCES DETAILS

ADOPTED AS STANDARD DESIGN
BY
CITY OF WICHITA

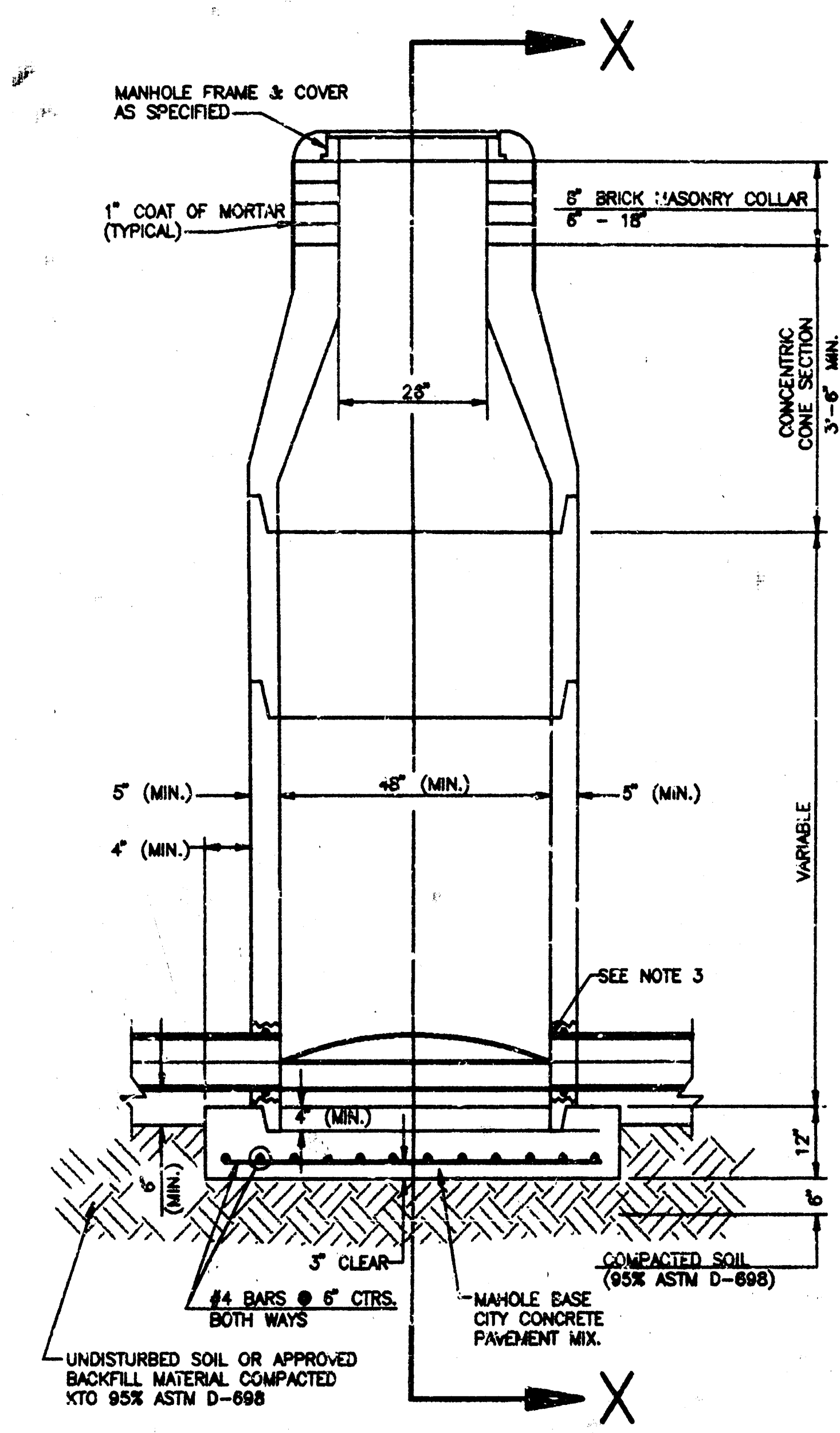
X
MANHOLE FRAME & COVER AS SPECIFIED
1" COAT OF MORTAR (TYPICAL)
8" BRICK MASONRY COLLAR
6" - 18"
CONCENTRIC CONE SECTION
3'-6" MIN.
4'-0" MAX
26"
5" (MIN.)
4" (MIN.)
48" (MIN.)
5" (MIN.)
VARIABLE
SEE NOTE 3
4" (MIN.)
6" (MIN.)
12"
6"
3" CLEAR
#4 BARS @ 6" CTRS. BOTH WAYS
MAHOLE BASE CITY CONCRETE PAVEMENT MIX.
COMPACTED SOIL (95% ASTM D-698)
UNDISTURBED SOIL OR APPROVED BACKFILL MATERIAL COMPACTED KTO 95% ASTM D-698
X

TYPE P
STANDARD MANHOLE

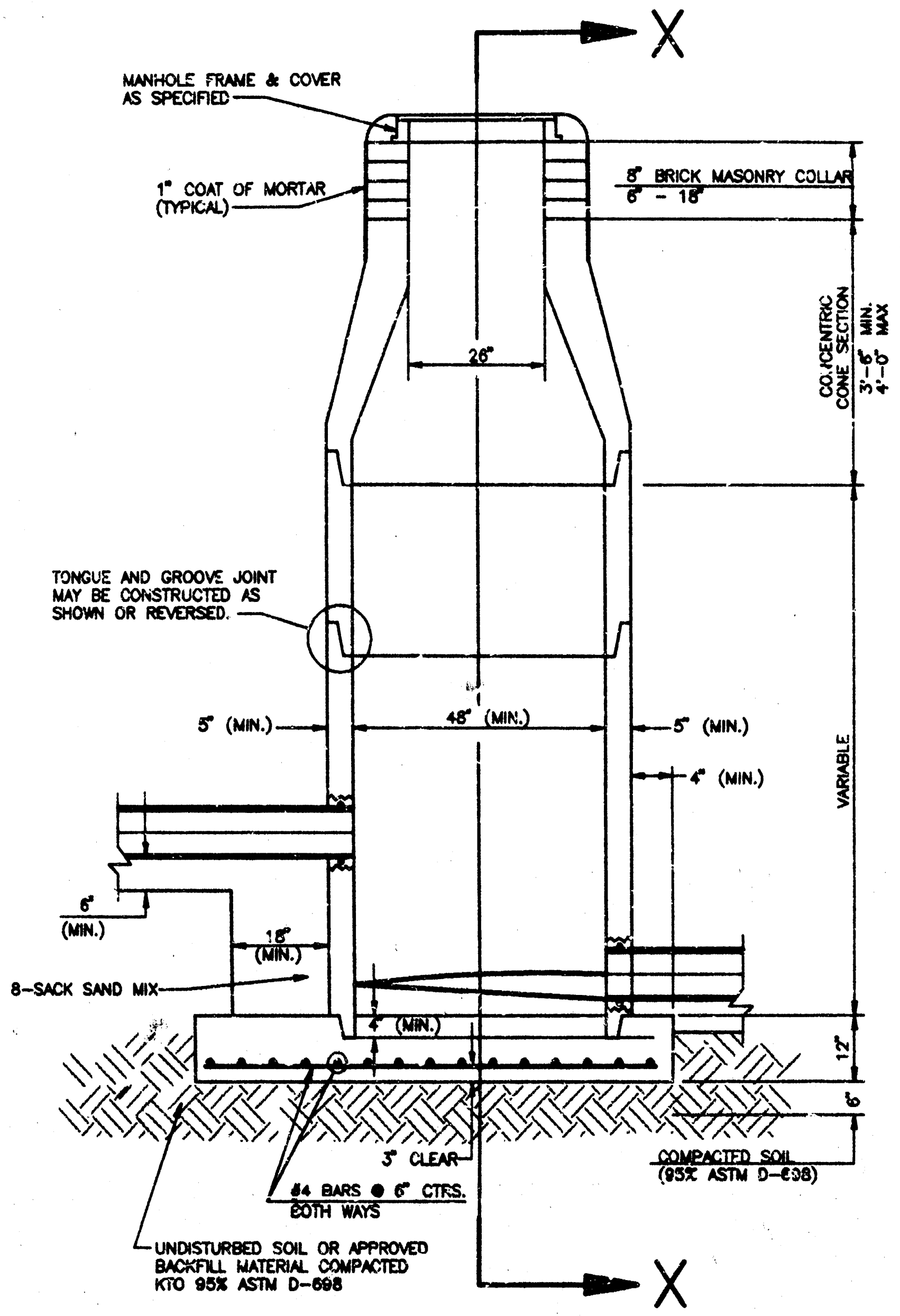
X
MANHOLE FRAME & COVER AS SPECIFIED
1" COAT OF MORTAR (TYPICAL)
8" BRICK MASONRY COLLAR
6" - 18"
CONCENTRIC CONE SECTION
3'-6" MIN.
4'-0" MAX
26"
TONGUE AND GROOVE JOINT MAY BE CONSTRUCTED AS SHOWN OR REVERSED.
5" (MIN.)
48" (MIN.)
5" (MIN.)
4" (MIN.)
VARIABLE
6" (MIN.)
18" (MIN.)
8-SACK SAND MIX
4" (MIN.)
12"
6"
3" CLEAR
#4 BARS @ 6" CTRS. BOTH WAYS
COMPACTED SOIL (95% ASTM D-698)
UNDISTURBED SOIL OR APPROVED BACKFILL MATERIAL COMPACTED KTO 95% ASTM D-698
X

TYPE P
INSIDE DROP MANHOLE

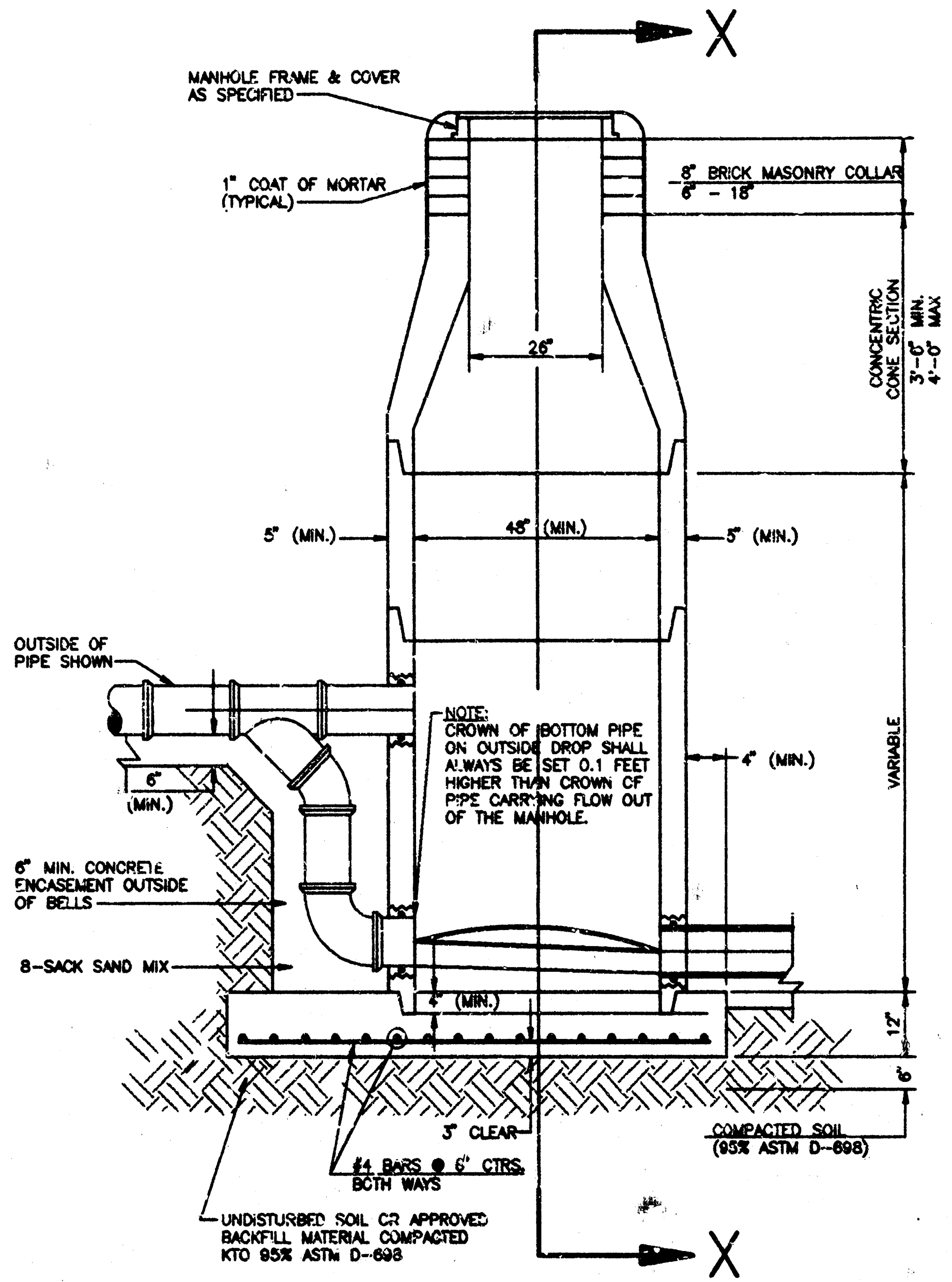
X
MANHOLE FRAME & COVER AS SPECIFIED
1" COAT OF MORTAR (TYPICAL)
8" BRICK MASONRY COLLAR
6" - 18"
CONCENTRIC CONE SECTION
3'-6" MIN.
4'-0" MAX
26"
5" (MIN.)
48" (MIN.)
5" (MIN.)
OUTSIDE OF PIPE SHOWN
6" (MIN.)
NOTE: CROWN OF BOTTOM PIPE ON OUTSIDE DROP SHALL ALWAYS BE SET 0.1 FEET HIGHER THAN CROWN OF PIPE CARRYING FLOW OUT OF THE MANHOLE.
4" (MIN.)
VARIABLE
6" MIN. CONCRETE ENCASEMENT OUTSIDE OF BELLS
8-SACK SAND MIX
4" (MIN.)
12"
6"
3" CLEAR
#4 BARS @ 6" CTRS. BOTH WAYS
COMPACTED SOIL (95% ASTM D-698)
UNDISTURBED SOIL OR APPROVED BACKFILL MATERIAL COMPACTED KTO 95% ASTM D-698
X

TYPE P
OUTSIDE DROP MANHOLE

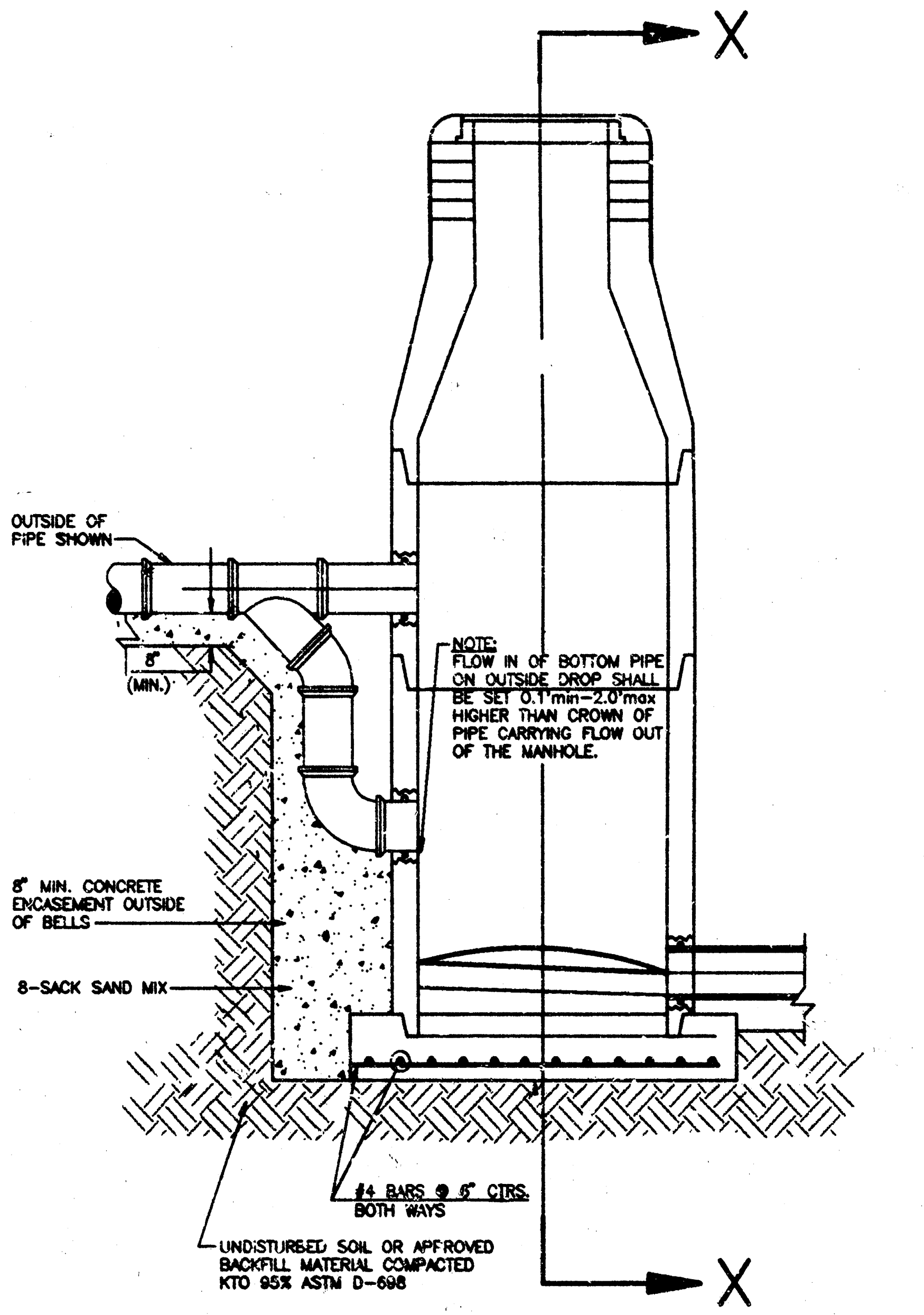
X
OUTSIDE OF PIPE SHOWN
8" (MIN.)
NOTE: FLOW IN OF BOTTOM PIPE ON OUTSIDE DROP SHALL BE SET 0.1'min-2.0'max HIGHER THAN CROWN OF PIPE CARRYING FLOW OUT OF THE MANHOLE.
8" MIN. CONCRETE ENCASEMENT OUTSIDE OF BELLS
8-SACK SAND MIX
#4 BARS @ 6" CTRS. BOTH WAYS
UNDISTURBED SOIL OR APPROVED BACKFILL MATERIAL COMPACTED KTO 95% ASTM D-698
X

TYPE P
OUTSIDE DROP ON EXISTING MANHOLE

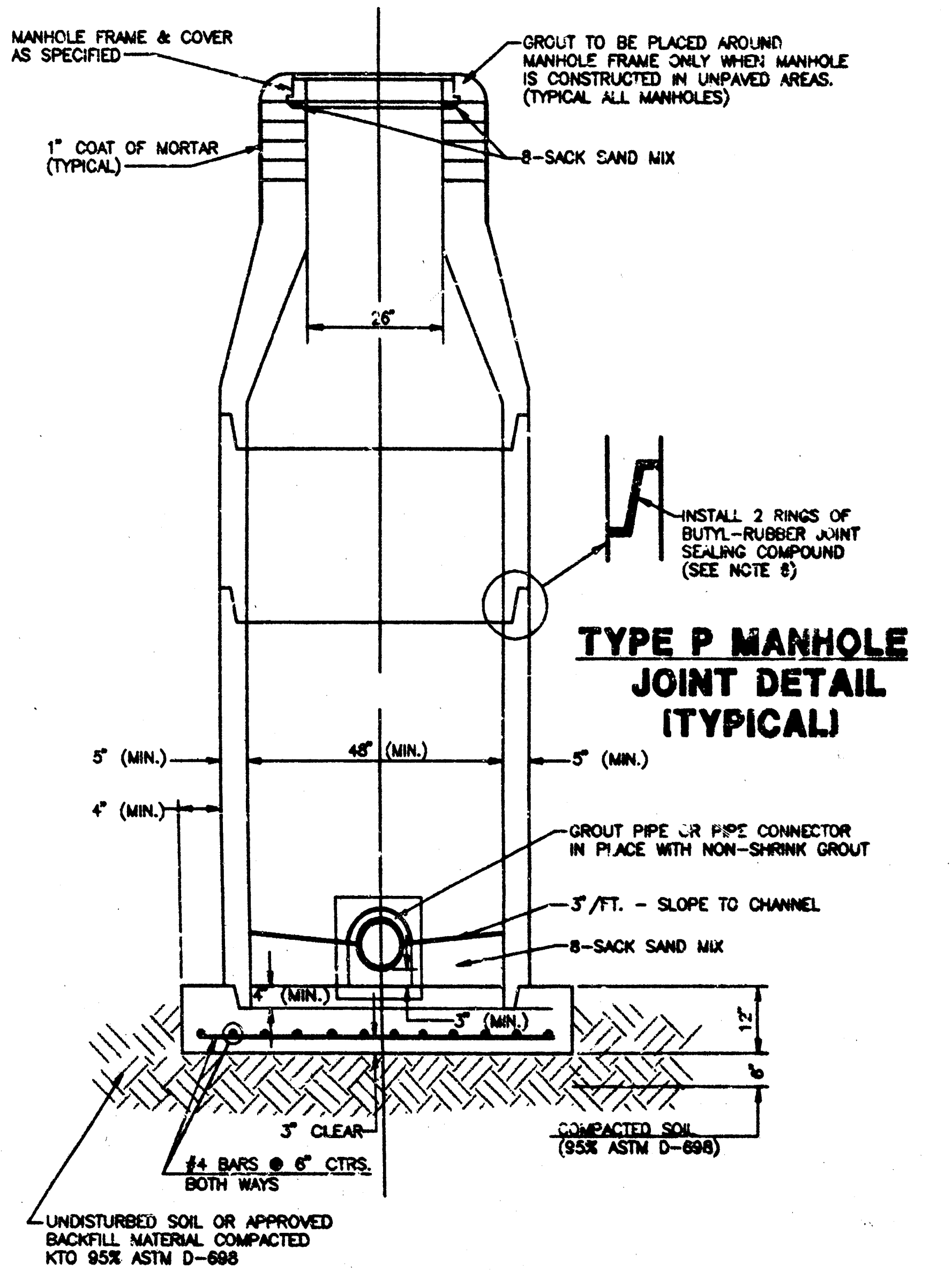
MANHOLE FRAME & COVER AS SPECIFIED
GROUT TO BE PLACED AROUND MANHOLE FRAME ONLY WHEN MANHOLE IS CONSTRUCTED IN UNPAVED AREAS. (TYPICAL ALL MANHOLES)
1" COAT OF MORTAR (TYPICAL)
8-SACK SAND MIX
26"
INSTALL 2 RINGS OF BUTYL-RUBBER JOINT SEALING COMPOUND (SEE NOTE 6)
5" (MIN.)
48" (MIN.)
5" (MIN.)
4" (MIN.)
GROUT PIPE OR PIPE CONNECTOR IN PLACE WITH NON-SHRINK GROUT
3"/FT. - SLOPE TO CHANNEL
8-SACK SAND MIX
4" (MIN.)
3" (MIN.)
12"
6"
3" CLEAR
#4 BARS @ 6" CTRS. BOTH WAYS
COMPACTED SOIL (95% ASTM D-698)
UNDISTURBED SOIL OR APPROVED BACKFILL MATERIAL COMPACTED KTO 95% ASTM D-698

TYPE P MANHOLE
JOINT DETAIL
(TYPICAL)

SECTION X
(TYPICAL)

GENERAL NOTES

PRECAST MANHOLE NOTES

1. ALL PRECAST CONCRETE MANHOLE SECTIONS SHALL CONFORM TO THE LATEST REVISIONS OF A.S.T.M. C478 AS MODIFIED BY THE SPECIFICATIONS.
2. NON-SHRINK GROUT SHALL BE NON-METALLIC TYPE.
3. APPROVED FLEXIBLE WATERSTOP GASKETS SHALL BE INSTALLED TO JOIN THE SEWER TO THE MANHOLE WALL WHEN A.B.S. COMPOSITE PIPE OR P.V.C. PIPE IS USED. FOR OTHER TYPES OF PIPE THE SEWER SHALL BE GROUTED IN PLACE WITH NON-SHRINK GROUT. THE SEWER PIPE SHALL BE SUPPORTED WITH CONCRETE ENCASEMENT A MINIMUM OF 3 FEET FROM THE MANHOLE WALL AND TO THE FIRST JOINT FOR V.C.P. SUCH THAT THE JOINT REMAINS FLEXIBLE.
4. ALL INSIDE SURFACES OF THE CONCRETE MANHOLE WHICH WOULD BE EXPOSED TO SEWER GAS SHALL BE COATED WITH 2 COATS TNEMEC SERIES 66 HI-BUILD EPOXOLINE, DRY THICKNESS OF 8 MILS (MIN.)
5. EXTERIOR MANHOLE WALLS SHALL BE COATED WITH 1 COAT MOBILARMA 633 BITUMINUS COATING.
6. JOINT SEALING COMPOUND SHALL BE KENT SEAL NO. 2 OR APPROVED EQUAL.
7. PRECAST MANHOLES SHALL BE SET AT LEAST 4 INCHES INTO THE MANHOLE BASE.
8. TOP OF MANHOLE FLOOR SLAB SHALL BE AT LEAST 3 INCHES BELOW THE FLOW LINE OF THE OUTLET PIPE TO INSURE SUFFICIENT MINIMUM THICKNESS OF SHAPED INVERT.
9. LIFTING HOLES SHALL BE FILLED WITH NON-SHRINK GROUT AND THE INTERIOR SURFACE COATED AS SPECIFIED.
10. MORTAR USED IN MASONRY CONSTRUCTION SHALL CONTAIN 8 SACKS OF CEMENT PER CUBIC YARD. CONCRETE USED IN MANHOLE BASES SHALL CONFORM TO THE REQUIREMENTS OF CONCRETE FOR CONCRETE PAVEMENT CONSTRUCTION AS SPECIFIED IN THE CITY STANDARD PAVING SPECIFICATIONS USING CITY CONCRETE PAVEMENT MIX WITHOUT AIR ENTERING ADMIXTURE. MORTAR SHALL BE PLACED AROUND THE MANHOLE RING AS SHOWN ON THE DRAWINGS WHEN MANHOLES ARE CONSTRUCTED IN UNPAVED AREAS. MANHOLES CONSTRUCTED WHERE PIPE SIZES ARE SMALLER THAN 24" SHALL HAVE AN INSIDE DIAMETER OF 4'. MANHOLES CONSTRUCTED WHERE PIPE SIZES ARE 24" OR LARGER SHALL HAVE AN INSIDE DIAMETER OF 5'. COMPLETED MANHOLE SHALL BE WITHOUT LEAKS AND WATER TIGHT.
11. REINFORCING STEEL SHALL BE INSTALLED IN THE MANHOLE BASES AND SHALL CONSIST OF NO. 4 BARS PLACED ON 6" CENTERS IN BOTH DIRECTIONS. THE MANHOLE BASE REINFORCEMENT SHALL BE PLACED AT LEAST 3" ABOVE THE BOTTOM OF THE MANHOLE BASE. ALL COSTS FOR FURNISHING AND INSTALLING REINFORCING STEEL SHALL BE INCLUDED IN THE UNIT PRICE BID FOR THE MANHOLE.
12. OPENINGS SHALL BE CUT INTO THE MANHOLE WALL WHEN OUTSIDE DROPS ARE CONSTRUCTED ON EXISTING MANHOLES. SUCH OPENINGS CUT INTO EXISTING MANHOLES SHALL BE AS SMALL AS PRACTICAL TO FACILITATE INSTALLING AND GROUTING THE NEW PIPE IN PLACE. WATERSTOP GASKETS SHALL BE USED WITH P.V.C. AND A.B.S. COMPOSITE PIPE. THE NEW PIPE SHALL BE GROUTED INTO THE OPENING USING AN APPROVED NONSHRINK GROUT FOR THE FULL MANHOLE WALL THICKNESS. THE EXTERIOR OF THE COMPLETED CONNECTION SHALL BE SEALED WITH AN APPROVED BITUMINOUS COATING SUCH THAT THE CONNECTION WILL BE WATER TIGHT. FLOOR OF MANHOLE SHALL BE MODIFIED TO FORM NEW FLOW CHANNEL FOR THE NEW CONNECTION AS INDICATED BY THE DRAWING. THIS WORK, INCLUDING MODIFICATION OF MANHOLE FLOOR, SHALL BE PAID FOR AT THE UNIT PRICE BID FOR OUTSIDE DROP STACK CONSTRUCTED ON EXISTING MANHOLE.
13. THE FLOORS OF ALL MANHOLES SHALL BE SHAPED WITH FLOW CHANNELS SUCH THAT THE MANHOLES WILL BE SELF CLEANING AND FREE OF AREAS WHERE SOLIDS COULD BE DEPOSITED AS SEWAGE FLOWS THROUGH THE MANHOLE FROM ALL INLET PIPES TO THE OUTLET PIPE. FLOW CHANNELS SHALL BE FORMED TO MATCH THE BOTTOM HALVES OF THE INFLOWING PIPES AND THE OUTFLOWING PIPE AS SHOWN BY THE DRAWINGS EXCEPT FOR INSIDE DROP MANHOLES. FLOW CHANNELS FOR INSIDE DROP MANHOLES SHALL BE CONSTRUCTED AS INDICATED BY THE DRAWING. MANHOLE FLOORS SHALL HAVE SLOPES OF 3 INCHES PER FOOT IN THE AREAS OUTSIDE OF THE FLOW CHANNELS SLOPED TOWARD THE FLOW CHANNELS. PIPES LAID THROUGH MANHOLES SHALL HAVE THE TOP HALF REMOVED TO NEAT LINES FOR THE FULL INSIDE DIAMETER OF THE MANHOLE. MANHOLE FLOORS SHALL THEN BE SHAPED AROUND THE BOTTOM HALF OF THE PIPE WHICH FORMS THE FLOW CHANNEL.
14. PIPES INSTALLED WITHIN THE EXCAVATION MADE FOR THE MANHOLE SHALL BE CRADLED WITH CONCRETE TO THE LIMITS OF THE MANHOLE EXCAVATION. WHEN CLAY PIPE IS USED, THE CRADLE SHALL EXTEND TO THE FIRST JOINT OUTSIDE THE MANHOLE. THE CRADLE SHALL BE TERMINATED AT THE CLAY PIPE JOINT IN A MANNER WHICH WILL MAINTAIN THE FLEXIBILITY OF THE JOINT. COST OF CRADLE WITHIN MANHOLE EXCAVATION OR TO CLAY PIPE JOINTS ADJACENT TO MANHOLE SHALL BE INCLUDED IN THE UNIT PRICE BID FOR THE MANHOLE.
15. MANHOLE COVER CASTINGS AND MANHOLE FRAME CASTINGS SHALL CONFORM TO THE REQUIREMENTS AS INDICATED IN THE STANDARD SPECIFICATIONS AND AS SHOWN IN THE STANDARD DETAIL DRAWING.
16. THE VERTICAL DROP IN INSIDE DROP MANHOLES SHALL NOT EXCEED 4' FOR INFLOWING PIPES SIZED 12" OR SMALLER AND 2' FOR INFLOWING PIPES LARGER THAN 12". THE CROWNS OF INFLOWING PIPES SHALL NEVER BE SET LOWER THAN THE CROWN OF THE OUTFLOWING PIPE.
17. STANDARD MANHOLES AND STANDARD INSIDE DROP MANHOLES SHALL BE BID AS STANDARD MANHOLES FOR THE TYPE AND DIAMETER INDICATED. OUTSIDE DROP MANHOLES SHALL BE BID AS STANDARD OUTSIDE DROP MANHOLES FOR THE TYPE AND DIAMETER INDICATED. ALL MANHOLE DIAMETERS WILL BE 4' UNLESS INDICATED OTHERWISE.
18. A BRICK MASONRY COLLAR SHALL BE INSTALLED BETWEEN THE CAST IRON FRAME AND THE CONCENTRIC CONE. THE COLLAR WILL HAVE 8" WALLS AND A VERTICAL HEIGHT OF 6" MINIMUM AND 18" MAXIMUM. A 1" COAT OF MORTAR WILL BE PLASTERED ON THE OUTSIDE OF THE COLLAR.

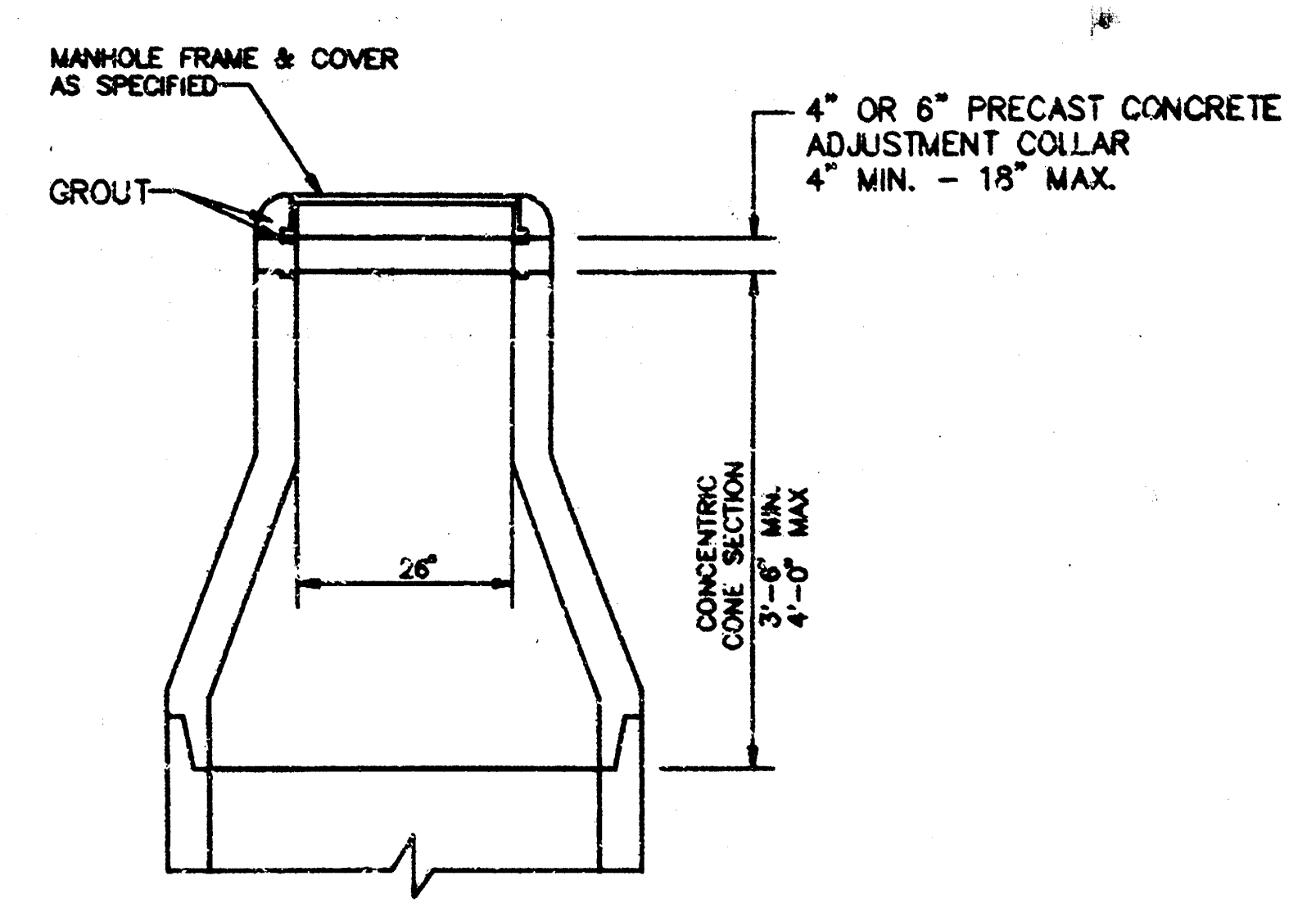
MANHOLE FRAME & COVER AS SPECIFIED
GROUT
4" OR 6" PRECAST CONCRETE ADJUSTMENT COLLAR 4" MIN. - 18" MAX.
26"
CONCENTRIC CONE SECTION
3'-6" MIN.
4'-0" MAX

ALTERNATE CONSTRUCTION
IN UNPAVED AREAS

INDUSTRIAL
AIR CENTER
SANITARY SEWER
MANHOLE DETAIL

Design GA
Drawn by AN
Checked by GA
Date 1/93
Job no. 9267SAN4

MID-KANSAS ENGINEERING CONSULTANTS INC.
3500 NORTH ROCK ROAD
BUILDING #800
WICHITA, KANSAS 67226
(316) 636-5566

Sheet 3 of 4

I, Kenneth H. Bengtson, a Civil Engineer in Kansas, do hereby certify that I have been in responsible charge of surveying and platting of "INDUSTRIAL AIR CENTER", an addition to Wichita, Sedgwick County, Kansas, into Lots, Blocks, Streets, and Reserves, the same being accurately set forth in the accompanying plat and described as follows:

A tract of land lying within the Southeast Quarter of Section 29, Township 26 South, Range 2 East of the 6th P.M., more particularly described as follows:

Commencing at the Southeast corner of said Section 29; thence N 0° 50' 50" W, 30.00 feet; thence S 89° 07' 32" W, 40.00 feet to the point of beginning; thence S 89° 07' 32" W, 1784.62 feet parallel and 30.00 feet North of the South line of said Southeast Quarter to the beginning of a curve to the right; thence 91.08 feet along said curve having a radius of 110.00 feet, a central angle of 47° 26' 36", a long chord of 88.50 feet bearing N 67° [illegible] 10" W; to a point on a curve to the left, said point lying on the East right-of-way line of Toben Street as platted in Toben Second Addition, an addition to Wichita, Sedgwick County, Kansas; thence following said East right-of-way 526.44 feet along said curve having a radius of 570.87 feet, a central angle of 52° 50' 10", a long chord of 507.98 feet bearing N 25° 35' 56" E; thence N 0° 49' 09" W, 229.26 feet to the beginning of a curve to the right; thence 525.97 feet along said curve having a radius of 470.87 feet, a central angle of 64° 00' 00", a long chord of 499.05 feet bearing N 31° 10' 51" E; thence following the South right-of-way line of 39th Street North as platted in said Toben Second Addition N 63° 10' 51" E, 113.98 feet to the beginning of a curve to the right; thence 213.22 feet along said curve having a radius of 470.87 feet, a central angle of 25° 56' 41", a long chord of 211.40 feet bearing N 76° 09' 12" E; thence N 89° 07' 32" E, 756.18 feet; thence S 76° 50' 19" E, 103.08 feet; thence N 89° 07' 32" E, 210.00 feet; thence S 0° 50' 50" E, 1214.86 feet parallel and 40.00 feet West of the East line of said Southeast Quarter to the point of beginning.

[illegible]

Kenneth H. Bengtson, P.E.
Mid-Kansas Engineering Consultants, P.A.
3500 N. Rock Road, Building #800
Wichita, KS 67226

Know all men by these presents that we the undersigned property owners of the land as above set forth in the Civil Engineers Certificate, have caused the same to be surveyed and platted into Lots, Blocks, Streets, and Reserves, the same to be known as "INDUSTRIAL AIR CENTER", an addition to Wichita, Sedgwick County, Kansas. The streets are hereby dedicated to and for the use of the public. Reserves are platted for construction and maintenance of public utilities, drainage, landscaping, irrigation and entry monuments. Reserve B is also platted for recreational purposes and related structures. Reserves shall be owned and maintained by the Industrial Air Center Owners Association. Easements for the construction and maintenance of public utilities and drainage, as indicated on the accompanying plat, are hereby granted. All abutters rights of access to or from Webb Road over and across the East line of "INDUSTRIAL AIR CENTER", except for one opening each to Lot 1 and 16, Block 1 and Lot 1, Block 2 as shall be determined by the City Engineer, are hereby granted to the City of Wichita, Kansas. Also, abutters rights of access to or from Toben/39th Street North across the West line of Lots 9, 10 and 11, Block 1 and the North line of Lots 12, 13, 14, 15 and 16, Block 1 except for two openings per lot as shall be determined by the City Engineer are hereby granted to the City of Wichita, Kansas.

M & H Investments, Inc.

By
Horst K. Hille, President

STATE OF KANSAS)
) SS:
SEDGWICK COUNTY)

Be it remembered that on this 5th day of April, 1987, before me a Notary Public in and for said State and County, came Horst K. Hiller, President, M & H Investments, Inc., to me personally known to be the same person who executed the foregoing instrument of writing and duly acknowledged the execution of the same. In testimony whereof I have hereunto set my hand and affixed my notarial seal the day and year above written.

Katheryn S. Bauman, Notary Public
Katheryn S. Bauman
My Appointment Expires: 1-24-91

This plat of "INDUSTRIAL AIR CENTER: has been submitted to and approved by the Wichita-Sedgwick County Metropolitan Area Planning Commission, Wichita, Kansas.

Dated this 30th day of April, 1987.

WICHITA-SEDGWICK COUNTY METROPOLITAN AREA PLANNING COMMISSION

________________, Chairman
John Terry Moore

Marvin Krout, Secretary
Marvin S. Krout

This plat approved and all dedications shown hereon, if any, accepted by the City Council of the City of Wichita, Kansas, this _____ day of __________, 1987.

________________, Mayor
Robert G. Knight

________________, Deputy City Clerk
Dale E. Rea

Entered on transfer record this _____ day of __________, 1987.

________________, County Clerk
Don Wright

STATE OF KANSAS

[illegible]

________________, Register of Deeds
Pat Keffler

________________, Deputy
Ed Resa

We, the Kansas State Bank and Trust Company, Wichita, Kansas, mortgagees on the above described property, do hereby consent to the plat of "INDUSTRIAL AIR CENTER".

KANSAS STATE BANK AND TRUST COMPANY, WICHITA, KANSAS

By:
WM R. Summers, Senior Vice-President

STATE OF KANSAS)
) SS:
SEDGWICK COUNTY)

Be it remembered that on this 5 day of Apr., 1987, before me a Notary Public in and for said State and County, came Wm. Randall Summers, on behalf of Kansas State Bank and Trust Company, Wichita, Kansas, to me personally known to be the same person who executed the foregoing instrument of writing and duly acknowledged the execution of the same. In testimony whereof I have hereunto set my hand and affixed my notarial seal the day and year above written.

________________, Notary Public
Susan J. Houlik
My Appointment Expires: [illegible]

FINAL PLAT OF

INDUSTRIAL AIR CENTER

AN ADDITION TO WICHITA, SEDGWICK COUNTY, KANSAS

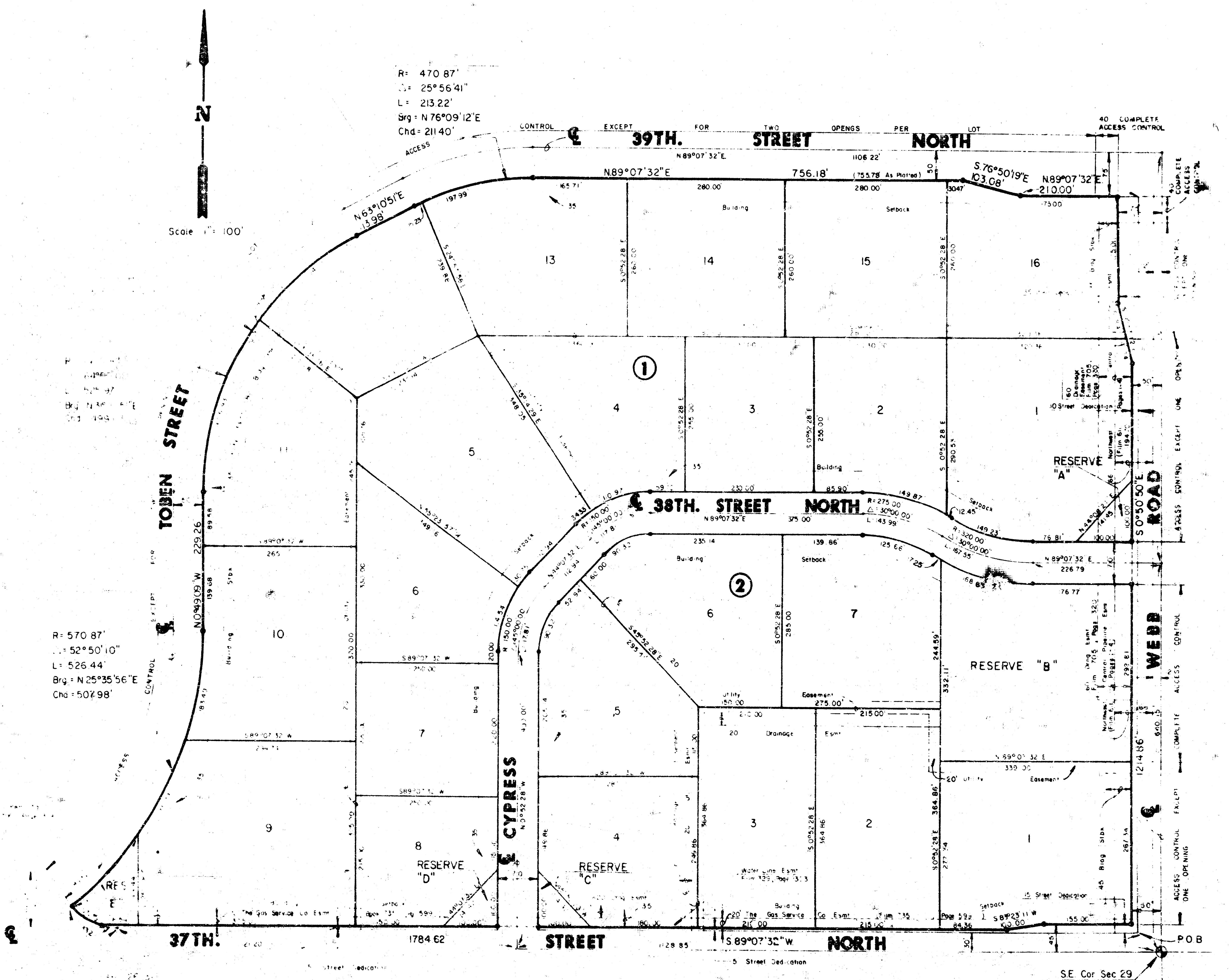
N
Scale 1" = 100'
R = 470.87'
Δ = 25°56'41"
L = 213.22'
Brg = N 76°09'12"E
Chd = 211.40'
ACCESS CONTROL EXCEPT FOR TWO OPENGS PER LOT
℄ 39TH. STREET NORTH
N89°07'32"E 1106.22'
N89°07'32"E 756.18' (755.78 As Platted)
S.76°50'19"E 103.08'
N89°07'32"E 210.00'
40 COMPLETE ACCESS CONTROL
N63°10'51"E 113.98'
197.99
165.71
280.00
280.00
Building Setback
13
14
15
16
①
4
3
2
1
5
11
12
RESERVE "A"
℄ 38TH. STREET NORTH
R = 275.00
N89°07'32"E
②
6
7
RESERVE "B"
5
4
3
2
1
10
9
8
6
7
RESERVE "C"
RESERVE "D"
TOBEN STREET
N0°49'09"W 229.26
R = 570.87'
Δ = 52°50'10"
L = 526.44'
Brg = N 25°35'56"E
Chd = 507.98'
CYPRESS
WEBB ROAD
S0°50'50"E 1214.86
ACCESS CONTROL EXCEPT ONE OPENING
COMPLETE ACCESS CONTROL
℄ 37TH. STREET NORTH
1784.62
S89°07'32"W
15 Street Dedication
S 89°23'11"W 100.00
155.00
30'
P.O.B
S.E. Cor Sec 29
T26S., R 2 E