SANITARY SEWER PLANS

INDUSTRIAL AIR CENTER

LATERAL 78, SANITARY SEWER NO. 23

PROJECT NO. 468-82230

CITY OF WICHITA, KANSAS

MICHAEL E. LINDEBAK, CITY ENGINEER

OCA 743851

SANITARY SEWER: LOTS 1,2,3,14,15 & 16 BLOCK 1

TOBEN 3RD ADDITION

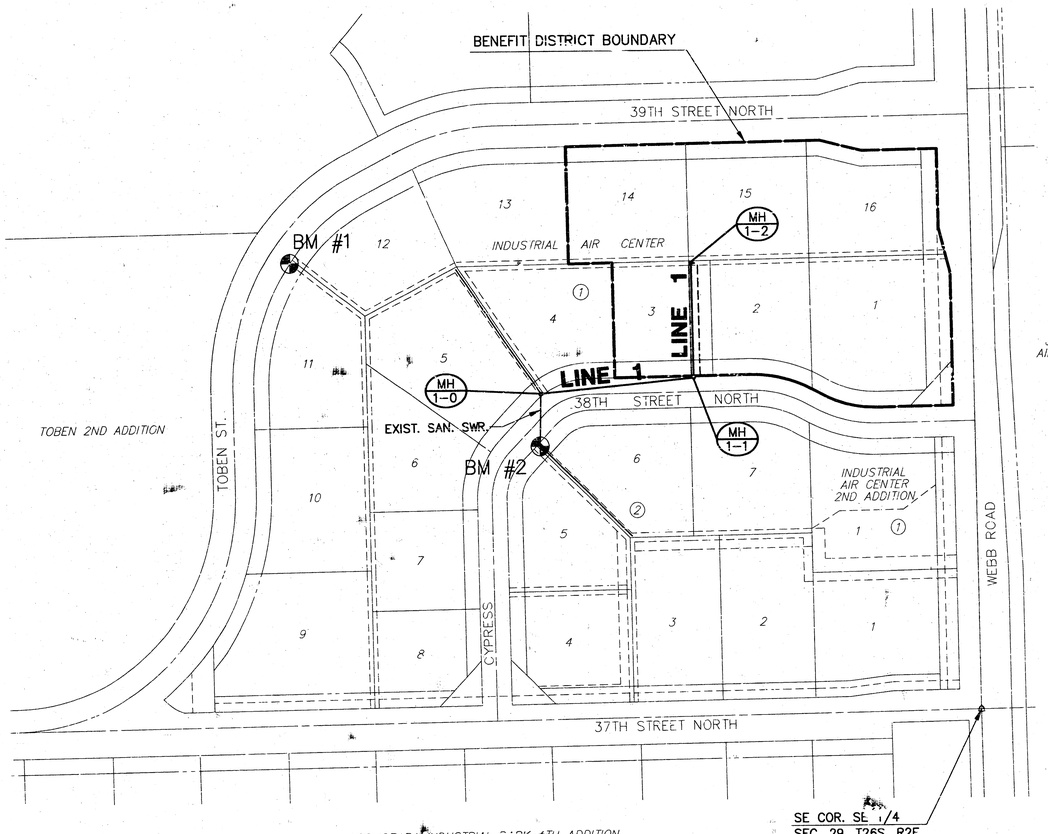

N

SCALE: 1" = 100'

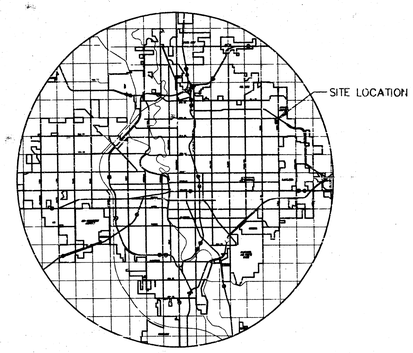

LOCATION MAP

GENERAL NOTES

1. THE CONTRACTOR SHALL BE RESPONSIBLE FOR PRESERVING PROPERTY IRONS. THE CONTRACTOR WILL BE REQUIRED TO RE-ESTABLISH ANY PROPERTY IRONS WHICH ARE DAMAGED OR DESTROYED BY HIS CONSTRUCTION OPERATIONS. SUCH IRONS SHALL BE RE-ESTABLISHED BY A LICENSED LAND SURVEYOR IN ACCORDANCE WITH STATE LAWS.

2. EXISTING UTILITIES AND THEIR LOCATIONS, AS SHOWN ON THE PLANS REPRESENT THE BEST INFORMATION OBTAINABLE FOR DESIGN. LOCATION INFORMATION HAS BEEN OBTAINED FROM THE VARIOUS UTILITY COMPANIES AND IS EITHER FROM COMPANY RECORD DRAWINGS OR COMPANY PROVIDED FIELD LOCATIONS. THE PLAN LOCATIONS SHOWN ARE NOT GUARANTEED. ADDITIONAL EXISTING UTILITIES MAY ALSO BE ENCOUNTERED.

3. CONTRACTOR WILL BE REQUIRED TO PROVIDE A MINIMUM ADVANCE NOTICE OF FORTY-EIGHT (48) HOURS TO UTILITY COMPANIES PRIOR TO STARTING ANY EXCAVATION AS FOLLOWS:

   KANSAS ONE-CALL 1-800-344-7233
   or 687-2470 (LOCAL WICHITA)

   THE CONTRACTOR MUST NOTIFY THE FOLLOWING IN CASE OF AN EMERGENCY:

SOUTHWESTERN BELL TELEPHONE COMPANY	1-800-286-8313
COX CABLEVISION	1-316-262-0661
KG&E (GAS & ELECTRIC)	383-8600
CITY OF WICHITA WATER & SEWER MAINTENANCE	262-6000

4. RUBBLE FROM THE REMOVAL OF MISCELLANEOUS STRUCTURES AND EXCESS EXCAVATION WHICH IS TO BE WASTED SHALL BE DISPOSED OF ON SITES TO BE PROVIDED BY THE CONTRACTOR. THESE SITES SHALL BE APPROVED BY THE ENGINEER AS TO SUITABILITY, APPEARANCE AND SITE LOCATION. LOCATIONS THAT, IN THE OPINION OF THE ENGINEER, WILL LEAVE AN UNSIGHTLY APPEARANCE WILL NOT BE APPROVED. ALL DIPOSAL SITES MUST BE APPROVED BY THE KANSAS DEPARTMENT OF HEALTH AND ENVIRONMENT. MATERIAL EITHER STOCKPILED OR DISPOSED OF IN A FLOOD PLAIN WOULD REQUIRE A KANSAS STATE BOARD OF AGRICULTURE PERMIT. ANY MATERIAL DUMPED IN WATERS OF THE UNITED STATES OR WETLANDS IS SUBJECT TO U.S. CORPS OF ENGINEERS PERMITTING REGULATIONS. ANY MATERIAL BURIED OR STOCKPILED BEYOND APPROVED CONSTRUCTION LIMITS WOULD REQUIRE ADDITIONAL ARCHAEOLOGICAL INVESTIGATIONS UNLESS BURIED IN A PREVIOUSLY APPROVED BORROW LOCATION.

5. COST OF EXCAVATION, HAULING, AND DUMPING OF EXCESS EXCAVATION SHALL BE SUBSIDIARY TO THE PROJECT.

6. A PORTION OF EXCESS EXCAVATED MATERIAL SHALL BE MOUNDED AROUND MANHOLES WHICH EXTEND MORE THAN ONE (1) FOOT ABOVE THE EXISTING GROUND. SUCH MOUNDS SHALL BE CONSTRUCTED WITH A SIX (6) FOOT DIAMETER FLAT TOP WITH 4 TO 1 SIDE SLOPES DOWN TO THE ORIGINAL GROUND. THE ELEVATION OF THE FLAT TOP OF THE MOUND SHALL BE 0.4 FOOT BELOW THE TOP OF THE MANHOLE.

7. ALL STUBS AND PLUGGED PIPES SHALL BE LOCATED WITH GREEN PLASTIC TAPE IN THE SAME MANNER AS RISERS.

8. CONNECTING TO EXISTING MANHOLES:
   PRIOR TO LAYING SEWER LINES USING EXISTING STUBS IN EXISTING MANHOLES, THE CONTRACTOR SHALL EXPOSE AND VERIFY THE ELEVATION, GRADE AND ALIGNMENT OF EXISTING STUBS AND NOTIFY THE ENGINEER OF ANY DEVIATION FROM THE PLAN. WHERE CONNECTION TO AN EXISTING MANHOLE THAT DOES NOT HAVE AN EXISTING STUB OR THE STUB IS UNUSABLE DUE TO ELEVATION GRADE OR ALIGNMENT, THE CONTRACTOR SHALL BORE CUT INTO EXISTING MANHOLE WALL TO MAKE CONNECTION USING APPROVED WATER STOP GASKET, AND RESHAPE THE EXISTING MANHOLE INVERT TO PROVIDE SMOOTH FLOW. THE COST OF CONNECTING TO EXISTING MANHOLES IS INCIDENTAL TO THE PROJECT.

9. TREES AND SHRUBS IN PUBLIC RIGHT-OF-WAY WHICH ARE IN DIRECT CONFLICT WITH PROPOSED NEW CONSTRUCTION SHALL BE REMOVED BY THE CONTRACTOR WITH THE ENGINEER'S APPROVAL. TREES AND SHRUBSWHICH ARE NOT IN DIRECT CONFLICT WITH PROPOSED NEW CONSTRUCTION SHALL BE SAVED AND PROTECTED FROM DAMAGE.

10. ALL DISTURBED AREAS TO BE SEEDED WITH RYE GRASS AT A RATE OF 200 LBS. PER ACRE WITHIN 10 DAYS OF CONSTRUCTION. CONTRACTOR TO PREPARE GROUND PER CITY SPECIFICATIONS. COST IS SUBSIDIARY TO SITE PREPARATION AND RESTORATION.

INDEX TO DRAWINGS

SHEET NO.	DESCRIPTION
1	TITLE SHEET
2	MANHOLE DETAILS
3	LINE 1 PLAN & PROFILE
4	FINAL PLAT

BENCHMARKS

BM #1 "□" CUT AT CENTER OF INLET NW COR. OF LOT 12, BLK 1.
ELEV. = 224.96

BM #2 " + " CUT AT N. EDGE SSMH RIM NW COR. OF LOT 6, BLK 1.
ELEV. = 232.92

GREGORY J. ALLRUM LICENSED 11980 10-2002 KANSAS PROFESSIONAL ENGINEER

MKEC
411 N. WEBB ROAD
WICHITA, KS. 67206
316 - 684 - 9600

INDUSTRIAL AIR CENTER (PROJECT NAME)		
SANITARY SEWER IMPROVEMENTS (SHEET TITLE)		
GJA (DESIGN BY:)	BDM (DRAWN BY:)	GJA (CHECKED BY:)
JULY, 2000 (DATE)	00156BT1 (JOB NO.)	1 / 4 (SHEET/OF)

H:\CIVIL\00156\DWG\SAN\00156BT1.DWG Wed Aug 09 13:26:13 2000

H:\CIVIL\00156\DWG\SAN\00156BT1.DWG

SEWER APPURTENANCES DETAILS

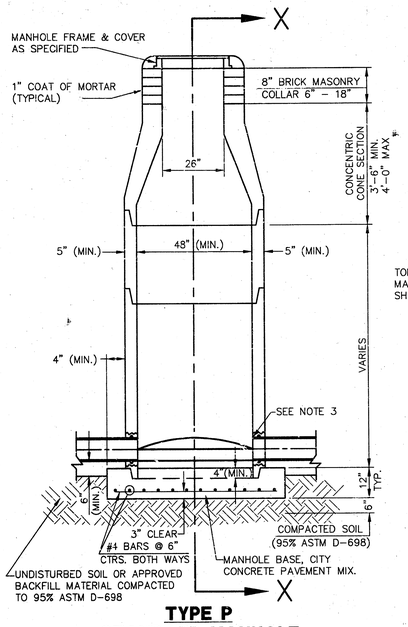

TYPE P
STANDARD MANHOLE

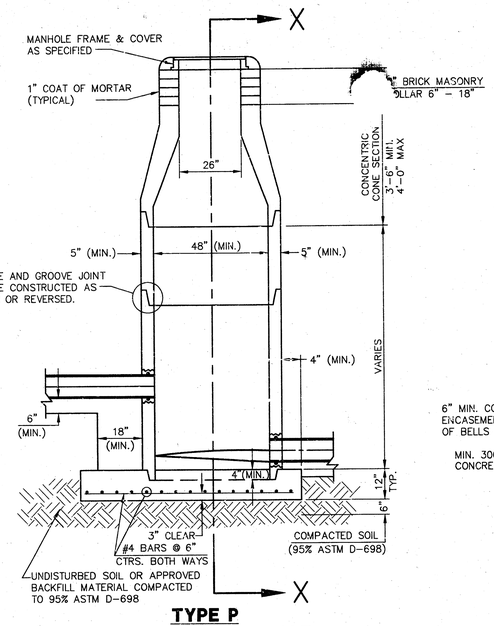

TYPE P
INSIDE DROP MANHOLE

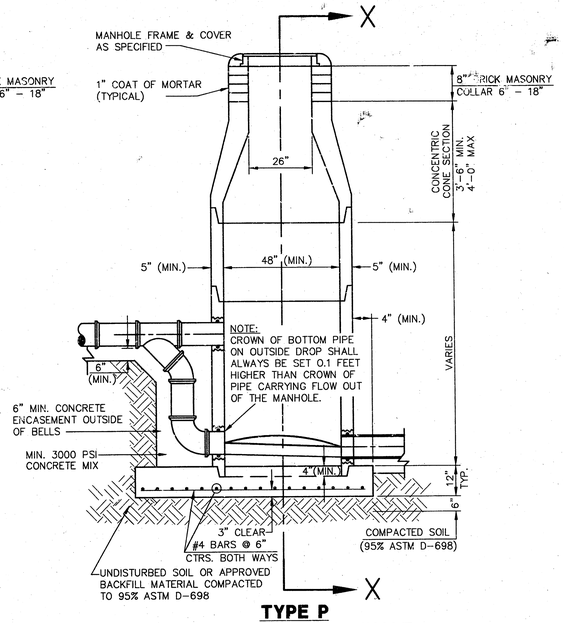

TYPE P
OUTSIDE DROP MANHOLE

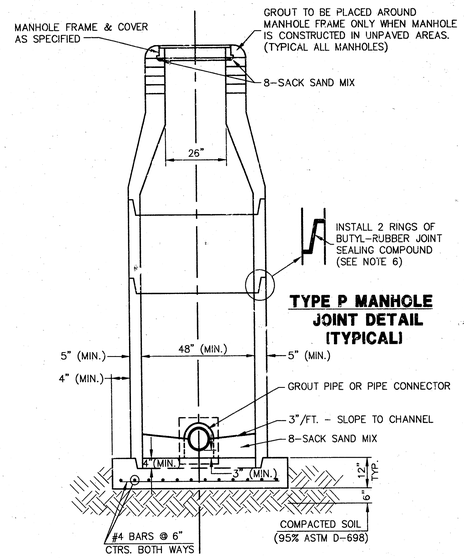

TYPE P MANHOLE JOINT DETAIL (TYPICAL)

SECTION X (TYPICAL)

GENERAL NOTES - PRECAST MANHOLE NOTES

1. ALL PRECAST CONCRETE MANHOLE SECTIONS SHALL CONFORM TO THE LATEST REVISIONS OF A.S.T.M. C478 AS MODIFIED BY THE SPECIFICATIONS.
2. NON-SHRINK GROUT SHALL BE NON-METALLIC TYPE.
3. APPROVED FLEXIBLE WATERSTOP GASKETS SHALL BE INSTALLED TO JOIN THE SEWER TO THE MANHOLE WALL WHEN A.B.S. COMPOSITE PIPE OR P.V.C. PIPE IS USED. FOR OTHER TYPES OF PIPE THE SEWER SHALL BE GROUTED IN PLACE WITH NON-SHRINK GROUT. THE SEWER PIPE SHALL BE SUPPORTED WITH CONCRETE ENCASEMENT A MINIMUM OF 3 FEET FROM THE MANHOLE WALL AND TO THE FIRST JOINT FOR V.C.P. SUCH THAT THE JOINT REMAINS FLEXIBLE.
4. ALL INSIDE SURFACES OF THE CONCRETE MANHOLE WHICH WOULD BE EXPOSED TO SEWER GAS SHALL BE COATED WITH 2 COATS TNEMEC SERIES 66 HI-BUILD EPOXOLINE, DRY THICKNESS OF 8 MILS (MIN.)
5. EXTERIOR MANHOLE WALLS SHALL BE COATED WITH 1 COAT MOBILARMA 633 BITUMINOUS COATING.
6. JOINT SEALING COMPOUND SHALL BE KENT SEAL NO. 2 OR APPROVED EQUAL.
7. PRECAST MANHOLES SHALL BE SET AT LEAST 4 INCHES INTO THE MANHOLE BASE.
8. TOP OF MANHOLE FLOOR SLAB SHALL BE AT LEAST 3 INCHES BELOW THE FLOW LINE OF THE OUTLET PIPE TO INSURE SUFFICIENT MINIMUM THICKNESS OF SHAPED INVERT.
9. LIFTING HOLES SHALL BE FILLED WITH NON-SHRINK GROUT AND THE INTERIOR SURFACE COATED AS SPECIFIED.
10. MORTAR USED IN MASONRY CONSTRUCTION SHALL CONTAIN 8 SACKS OF CEMENT PER CUBIC YARD. CONCRETE USED IN MANHOLE BASES SHALL CONFORM TO THE REQUIREMENTS OF CONCRETE FOR CONCRETE PAVEMENT CONSTRUCTION AS SPECIFIED IN THE CITY STANDARD PAVING SPECIFICATIONS USING CITY CONCRETE PAVEMENT MIX WITHOUT AIR ENTRAINING ADMIXTURE. MORTAR SHALL BE PLACED AROUND THE MANHOLE RING AS SHOWN ON THE DRAWINGS WHEN MANHOLES ARE CONSTRUCTED IN UNPAVED AREAS. MANHOLES CONSTRUCTED WHERE PIPE SIZES ARE SMALLER THAN 24" SHALL HAVE AN INSIDE DIAMETER OF 4'. MANHOLES CONSTRUCTED WHERE PIPE SIZES ARE 24" OR LARGER SHALL HAVE AN INSIDE DIAMETER OF 5'. COMPLETED MANHOLE SHALL BE WITHOUT LEAKS AND WATER TIGHT.
11. REINFORCING STEEL SHALL BE INSTALLED IN THE MANHOLE BASES AND SHALL CONSIST OF NO. 4 BARS PLACED ON 6" CENTERS IN BOTH DIRECTIONS. THE MANHOLE BASE REINFORCEMENT SHALL BE PLACED AT LEAST 3" ABOVE THE BOTTOM OF THE MANHOLE BASE. ALL COSTS FOR FURNISHING AND INSTALLING REINFORCING STEEL SHALL BE INCLUDED IN THE UNIT PRICE BID FOR THE MANHOLE.
12. OPENINGS SHALL BE CUT INTO THE MANHOLE WALL WHEN OUTSIDE DROPS ARE CONSTRUCTED ON EXISTING MANHOLES. SUCH OPENINGS CUT INTO EXISTING MANHOLES SHALL BE AS SMALL AS PRACTICAL TO FACILITATE INSTALLING AND GROUTING THE NEW PIPE IN PLACE. WATERSTOP GASKETS SHALL BE USED WITH P.V.C. AND A.B.S. COMPOSITE PIPE. THE NEW PIPE SHALL BE GROUTED INTO THE OPENING USING AN APPROVED NONSHRINK GROUT FOR THE FULL MANHOLE WALL THICKNESS. THE EXTERIOR OF THE COMPLETED CONNECTION SHALL BE SEALED WITH AN APPROVED BITUMINOUS COATING SUCH THAT THE CONNECTION WILL BE WATER TIGHT. FLOOR OF MANHOLE SHALL BE MODIFIED TO FORM NEW FLOW CHANNEL FOR THE NEW CONNECTION AS INDICATED BY THE DRAWING. THIS WORK, INCLUDING MODIFICATION OF MANHOLE FLOOR, SHALL BE PAID FOR AT THE UNIT PRICE BID FOR OUTSIDE DROP STACK CONSTRUCTED ON EXISTING MANHOLE.
13. THE FLOORS OF ALL MANHOLES SHALL BE SHAPED WITH FLOW CHANNELS SUCH THAT THE MANHOLES WILL BE SELF CLEANING AND FREE OF AREAS WHERE SOLIDS COULD BE DEPOSITED AS SEWAGE FLOWS THROUGH THE MANHOLE FROM ALL INLET PIPES TO THE OUTLET PIPE. FLOW CHANNELS SHALL BE FORMED TO MATCH THE BOTTOM HALVES OF THE INFLOWING PIPES AND THE OUTFLOWING PIPE AS SHOWN BY THE DRAWINGS EXCEPT FOR INSIDE DROP MANHOLES. FLOW CHANNELS FOR INSIDE DROP MANHOLES SHALL BE CONSTRUCTED AS INDICATED BY THE DRAWING. MANHOLE FLOORS SHALL HAVE SLOPES OF 3 INCHES PER FOOT IN THE AREAS OUTSIDE OF THE FLOW CHANNELS SLOPED TOWARD THE FLOW CHANNELS. PIPES LAID THROUGH MANHOLES SHALL HAVE THE TOP HALF REMOVED TO NEAT LINES FOR THE FULL INSIDE DIAMETER OF THE MANHOLE. MANHOLE FLOORS SHALL THEN BE SHAPED AROUND THE BOTTOM HALF OF THE PIPE WHICH FORMS THE FLOW CHANNEL.
14. PIPES INSTALLED WITHIN THE EXCAVATION MADE FOR THE MANHOLE SHALL BE CRADLED WITH CONCRETE TO THE LIMITS OF THE MANHOLE EXCAVATION. WHEN CLAY PIPE IS USED, THE CRADLE SHALL EXTEND TO THE FIRST JOINT OUTSIDE THE MAHOLE. THE CRADLE SHALL BE TERMINATED AT THE CLAY PIPE JOINT IN A MANNER WHICH WILL MAINTAIN THE FLEXIBILITY OF THE JOINT. COST OF CRADLE WITHIN MANHOLE EXCAVATION OR TO CLAY PIPE JOINTS ADJACENT TO MANHOLE SHALL BE INCLUDED IN THE UNIT PRICE BID FOR THE MANHOLE.
15. MANHOLE COVER CASTINGS AND MANHOLE FRAME CASTINGS SHALL CONFORM TO THE REQUIREMENTS AS INDICATED IN THE STANDARD SPECIFICATIONS AND AS SHOWN IN THE STANDARD DETAIL DRAWING.
16. THE VERTICAL DROP IN INSIDE DROP MANHOLES SHALL NOT EXCEED 2' FOR INFLOWING PIPES SIZED 12" OR SMALLER AND 2' FOR INFLOWING PIPES LARGER THAN 12". THE CROWNS OF INFLOWING PIPES SHALL NEVER BE SET LOWER THAN THE CROWN OF THE OUTFLOWING PIPE.
17. STANDARD MANHOLES AND STANDARD INSIDE DROP MANHOLES SHALL BE BID AS STANDARD MANHOLES FOR THE TYPE AND DIAMETER INDICATED. OUTSIDE DROP MANHOLES SHALL BE BID AS STANDARD OUTSIDE DROP MANHOLES FOR THE TYPE AND DIAMETER INDICATED. ALL MANHOLE DIAMETERS WILL BE 4' UNLESS INDICATED OTHERWISE.
18. A BRICK MASONRY COLLAR SHALL BE INSTALLED BETWEEN THE CAST IRON FRAME AND THE CONCENTRIC CONE. THE COLLAR WILL HAVE 8" WALLS AND A VERTICAL HEIGHT OF 6" MINIMUM AND 18" MAXIMUM. A 1" COAT OF MORTAR WILL BE PLASTERED ON THE OUTSIDE OF THE COLLAR. THE USE OF PRE-CAST CONCRETE SPACERS FOR MANHOLE TOP ADJUSTMENT IS ALSO ALLOWED.

THE CITY OF WICHITA

CITY ENGINEER'S OFFICE
CITY HALL – SEVENTH FLOOR
455 NORTH MAIN STREET
WICHITA, KANSAS 67202
(316) 268-4501
(316) 268-4114 FAX

STANDARD TYPE 'P' MANHOLES

M. E. LINDEBAK P.E. – CITY ENGINEER

PROJECT NUMBER	INDEX CODE
468-82230	743851
DATE: JUNE 00	SHEET 2 OF 4

H:\CIVIL\02156\DWG\SAN\00156B01.DWG Wed Aug 09 13:26:50 2000

H:\CIVIL\02156\DWG\SAN\00156B01.DWG

INDUSTRIAL AIR CENTER
SANITARY SEWER PLANS
PROJ. NO. 468-82230

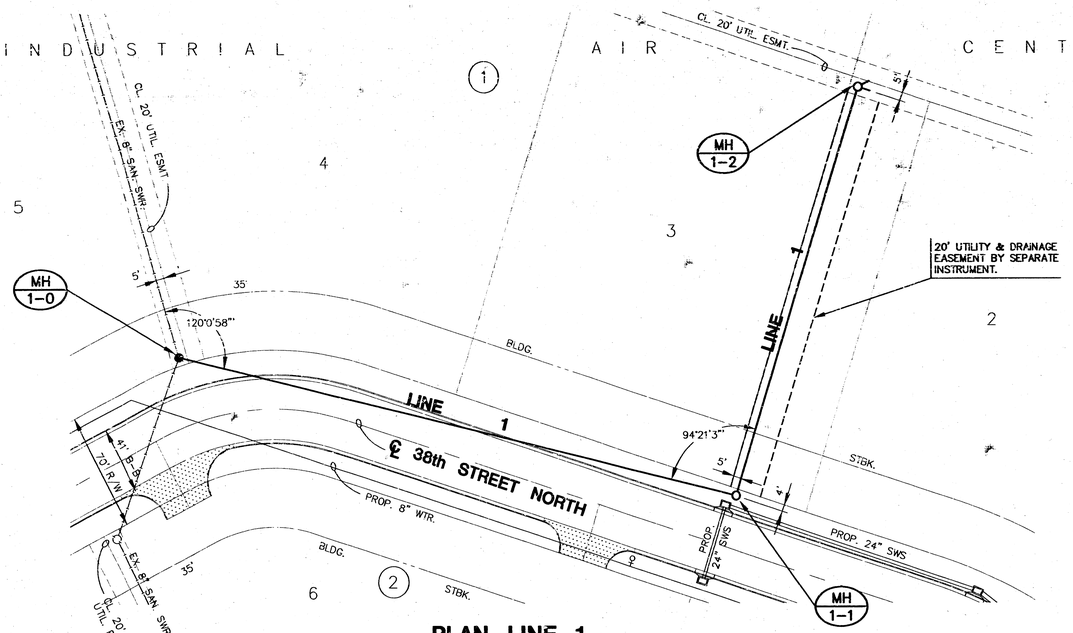

PLAN LINE 1

SCALE: 1"=40'

REVISED: 8-18-00
Manhole Top Elevation

PROFILE LINE 1

SCALE: HORIZ. 1"=40'
SCALE: VERT. 1"=5'

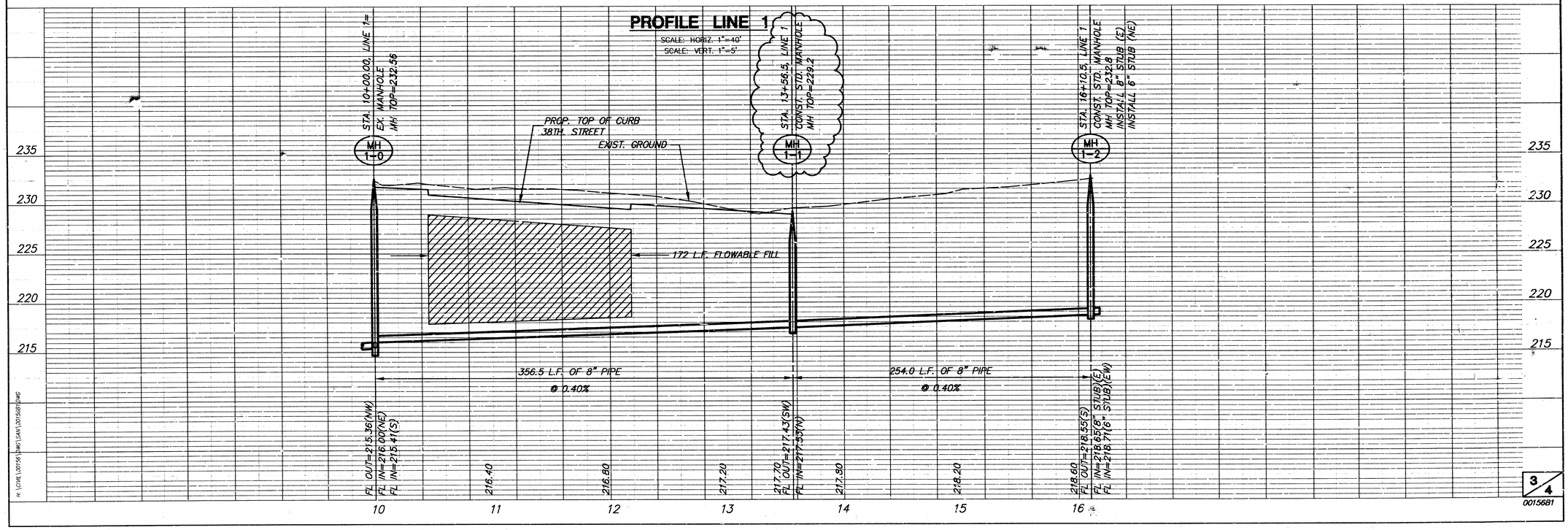

0015681

H:\CIVIL\00156\DWG\SANREVISED\0015681.DWG Fri Aug 25 08:18:15 2000

INDUSTRIAL AIR CENTER
SANITARY SEWER PLANS
PROJ. NO. 468-82230

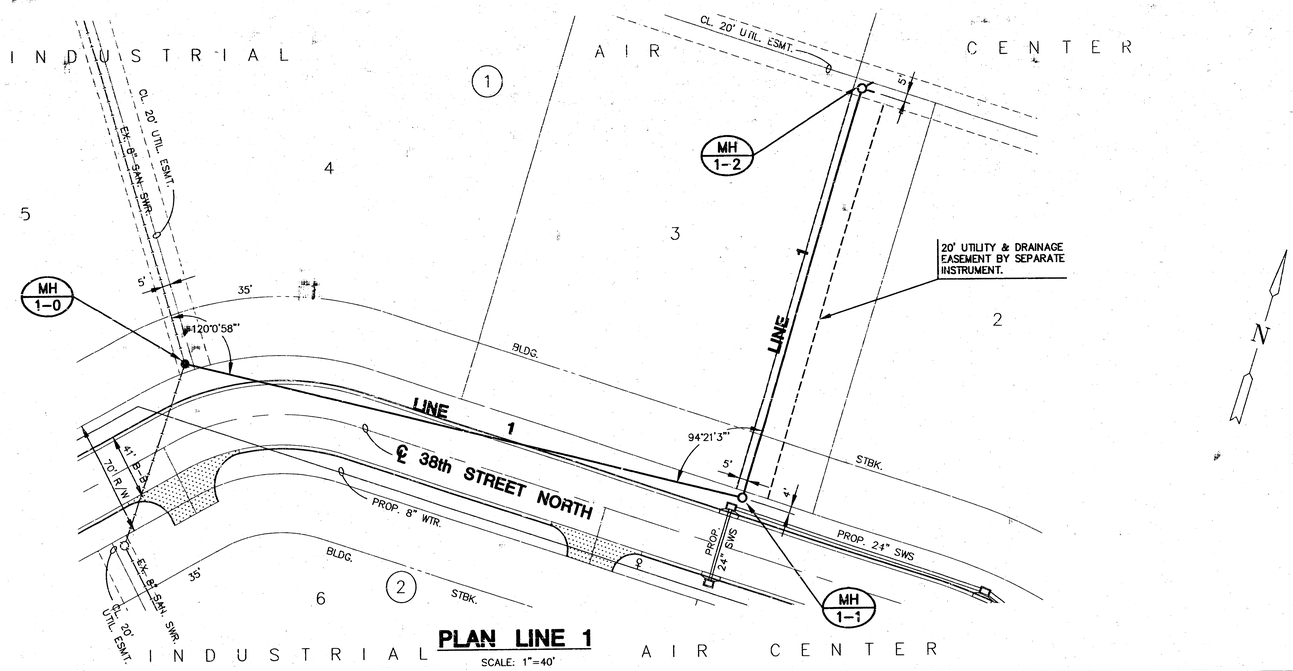

PLAN LINE 1

SCALE: 1"=40'

PROFILE LINE 1

SCALE: HORIZ. 1"=40'
SCALE: VERT. 1"=5'

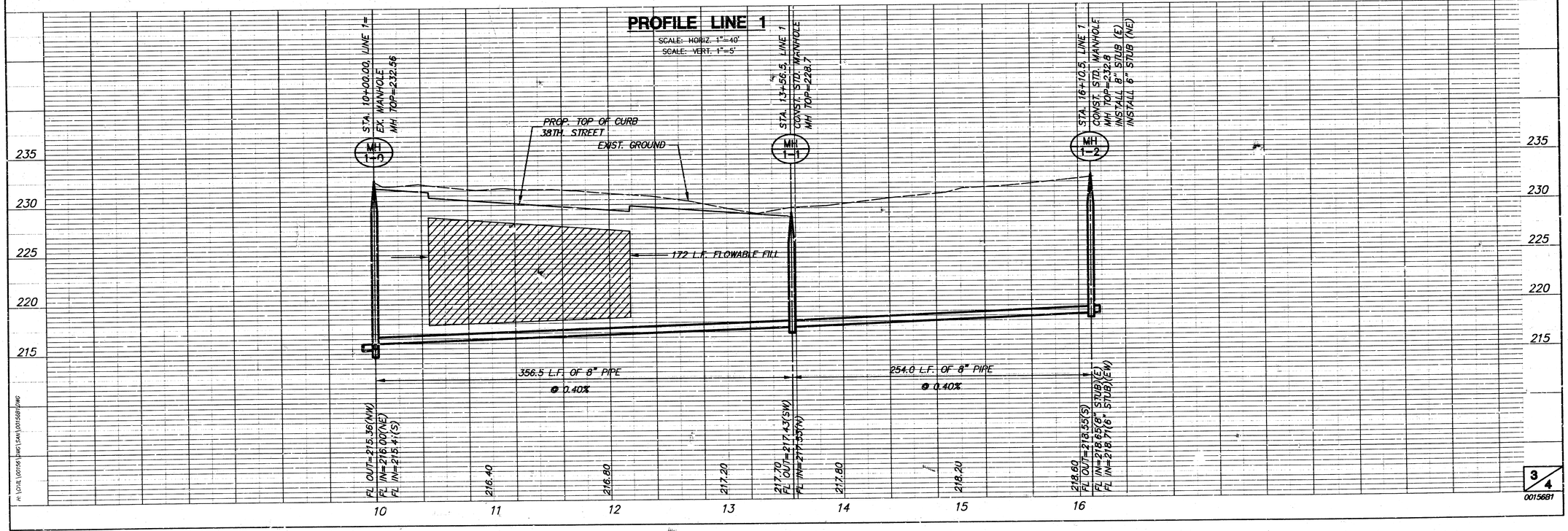

3/4
0015681

H:\C1VIL\0015681\DWG\SAN\0015681.DWG Wed Aug 09 13:26:32 2000

FINAL PLAT OF

INDUSTRIAL AIR CENTER

AN ADDITION TO WICHITA, SEDGWICK COUNTY, KANSAS

I, Kenneth H. Bengtson, a Civil Engineer in Kansas, do hereby certify that I have been in responsible charge of surveying and platting of "INDUSTRIAL AIR CENTER", an addition to Wichita, Sedgwick County, Kansas. Into Lots, Blocks, Streets, and Reserves, the same being accurately set forth in the accompanying plat and described as follows:

A tract of land lying within the Southeast Quarter of Section 29, Township 26 South, Range 2 East of the 6th P.M., more particularly described as follows:

Commencing at the Southeast corner of said Section 29; thence N 0° 50' 50" W, 30.00 feet; thence S 89° 07' 32" W, 40.00 feet to the point of beginning; thence S 89° 07' 32" W, 1784.62 feet parallel and 30.00 feet North of the South line of said Southeast Quarter to the beginning of a curve to the right; thence 91.08 feet along said curve having a radius of 110.00 feet, a central angle of 47° 26' 36", a long chord of 88.50 feet bearing N 67° 09' 10" W; to a point on a curve to the left, said point lying on the East right-of-way line of Toben Street as platted in Toben Second Addition, an addition to Wichita, Sedgwick County, Kansas; thence following said East right-of-way 826.44 feet along said curve having a radius of 570.87 feet, a central angle of 52° 50' 10", a long chord of 507.99 feet bearing N 25° 35' 56" E; thence N 0° 49' 09" W, 229.26 feet to the beginning of a curve to the right; thence 525.97 feet along said curve having a radius of 470.87 feet, a central angle of 64° 00' 00", a long chord of 499.05 feet bearing N 31° 10' 51" E; thence following the South right-of-way line of 39th Street North as platted in said Toben Second Addition N 63° 10' 51" E. 113.98 feet to the beginning of a curve to the right; thence 213.22 feet along said curve having a radius of 470.87 feet, a central angle of 25° 56' 41", a long chord of 211.40 feet bearing N 76° 09' 12" E; thence N 89° 07' 32" E, 756.18 feet; thence S 76° 50' 19" E, 103.08 feet; thence N 89° 07' 32" E, 210.00 feet; thence S 0° 50' 50" E, 1214.86 feet parallel and 40.00 feet West of the East line of said Southeast Quarter to the point of beginning.

I hereby certify that the details of this plat are correct to the best of my knowledge and belief this 15 day of April, 1987.

Kenneth H. Bengtson, P.E.
Mid-Kansas Engineering Consultants, P.A.
3500 N. Rock Road, Building #800
Wichita, KS 67226

Know all men by these presents that we the undersigned property owners of the land as above set forth in the Civil Engineers Certificate, have caused the same to be surveyed and platted into Lots, Blocks, Streets, and Reserves, the same to be known as "INDUSTRIAL AIR CENTER", an addition to Wichita, Sedgwick County, Kansas. The streets are hereby dedicated to and for the use of the public. Reserves are platted for construction and maintenance of public utilities, drainage, landscaping, irrigation and entry monuments. Reserve B is also platted for recreational purposes and related structures. Reserves shall be owned and maintained by the Industrial Air Center Owners Association. Easements for the construction and maintenance of public utilities and drainage, as indicated on the accompanying plat, are hereby granted. All abutters rights of access to or from Webb Road over and across the East line of "INDUSTRIAL AIR CENTER", except for one opening each to Lot 1 and 16, Block 1 and Lot 1, Block 2 as shall be determined by the City Engineer, are hereby granted to the City of Wichita, Kansas. Also, abutters rights of access to or from Toben/39th Street North across the West line of Lots 9, 10 and 11, Block 1 and the North line of Lots 12, 13, 14, 15 and 16, Block 1 except for two openings per lot as shall be determined by the City Engineer are hereby granted to the City of Wichita, Kansas.

M & H Investments, Inc

By Horst K. Hiller
Horst K. Hiller, President

STATE OF KANSAS)
) SS:
SEDGWICK COUNTY)

Be it remembered that on this 15th day of April, 1987, before me a Notary Public in and for said State and County, came Horst K. Hiller, President, M & H Investments, Inc., to me personally known to be the same person who executed the foregoing instrument of writing and duly acknowledged the execution of the same. In testimony whereof I have hereunto set my hand and affixed my notarial seal the day and year above written.

Katheryn S. Bauman, Notary Public
Katheryn S. Bauman
My Appointment Expires: 1-24-91

This plat of "INDUSTRIAL AIR CENTER: has been submitted to and approved by the Wichita-Sedgwick County Metropolitan Area Planning Commission, Wichita, Kansas.

Dated this 30th day of April, 1987.

WICHITA-SEDGWICK COUNTY METROPOLITAN AREA PLANNING COMMISSION

John Terry Moore, Chairman

Marvin S. Krout, Secretary

This plat approved and all dedications shown hereon, if any, accepted by the City Council of the City of Wichita, Kansas, this 12th day of May, 1987.

Robert G. Knight, Mayor

Date E. Rea, Deputy City Clerk

Entered on transfer record this 12th day of May, 1987.

Don Wright, County Clerk

STATE OF KANSAS)
) SS:
SEDGWICK COUNTY)

This is to certify that this instrument was filed for record in the Register of Deeds office this 15th day of May, 1987, at 9:30 AM

Pat Kettler, Register of Deeds

Ed Resa, Deputy

We, the Kansas State Bank and Trust Company, Wichita, Kansas, mortgagees on the above described property, do hereby consent to the plat of "INDUSTRIAL AIR CENTER".

KANSAS STATE BANK AND TRUST COMPANY, WICHITA, KANSAS

By: Wm R. Summers, SVP
WM. R. Summers, Senior Vice-President

STATE OF KANSAS)
) ss:
SEDGWICK COUNTY)

Be it remembered that on this 15 day of April, 1987, before me a Notary Public in and for said State and County, came Wm Randall Summers, on behalf of Kansas State Bank and Trust Company, Wichita, Kansas, to me personally known to be the same person who executed the foregoing instrument of writing and duly acknowledged the execution of the same. In testimony whereof I have hereunto set my hand and affixed my notarial seal the day and year above written.

Susan J. Houlik, Notary Public
Susan J. Houlik
My Appointment Expires: 11-25-89

11-25-89

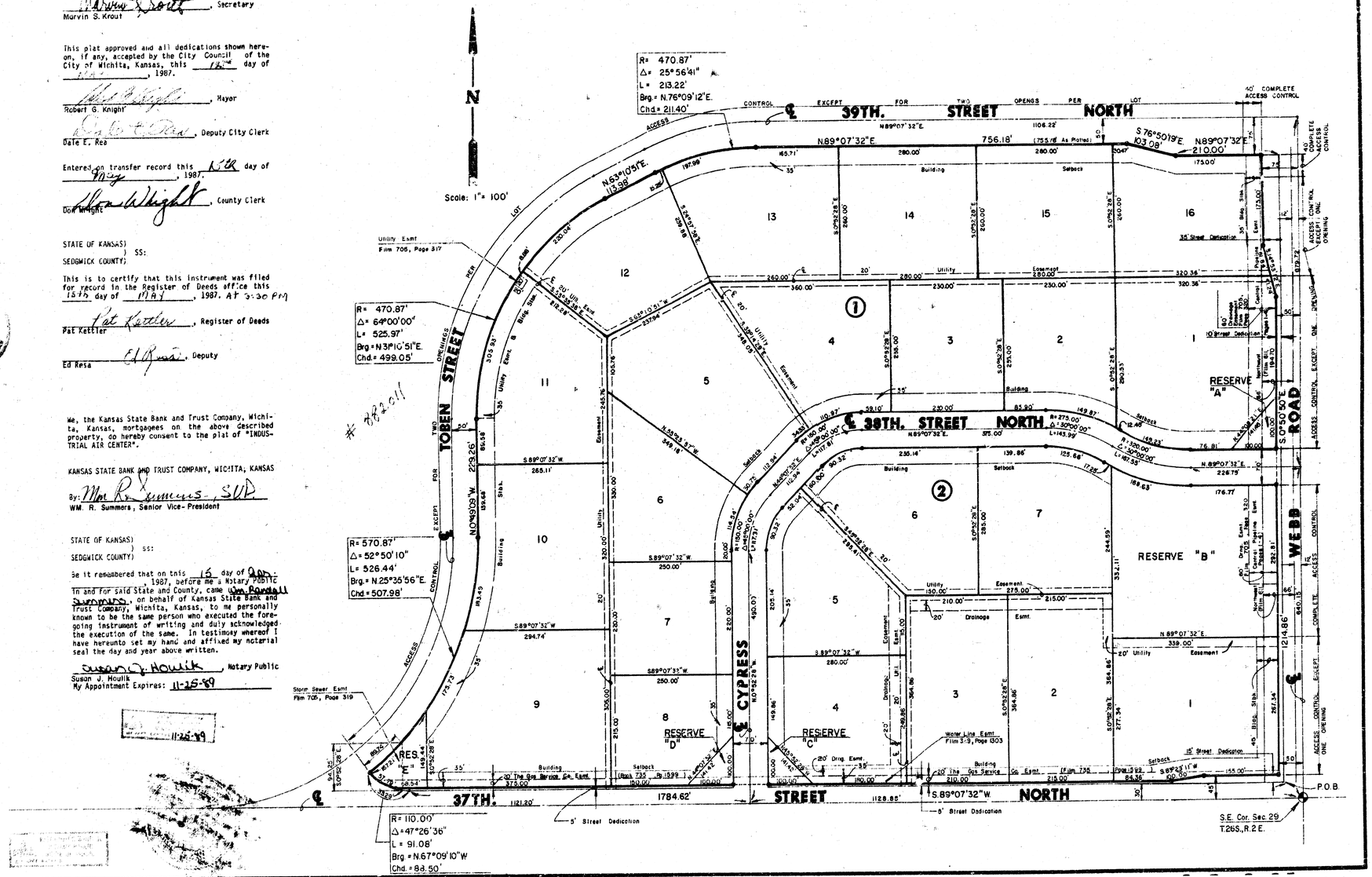

782011

Drawing.dwg Wed Aug 09 15:03:18 2000

FINAL PLAT OF

INDUSTRIAL AIR CENTER SECOND

AN ADDITION TO WICHITA, SEDGWICK COUNTY, KANSAS

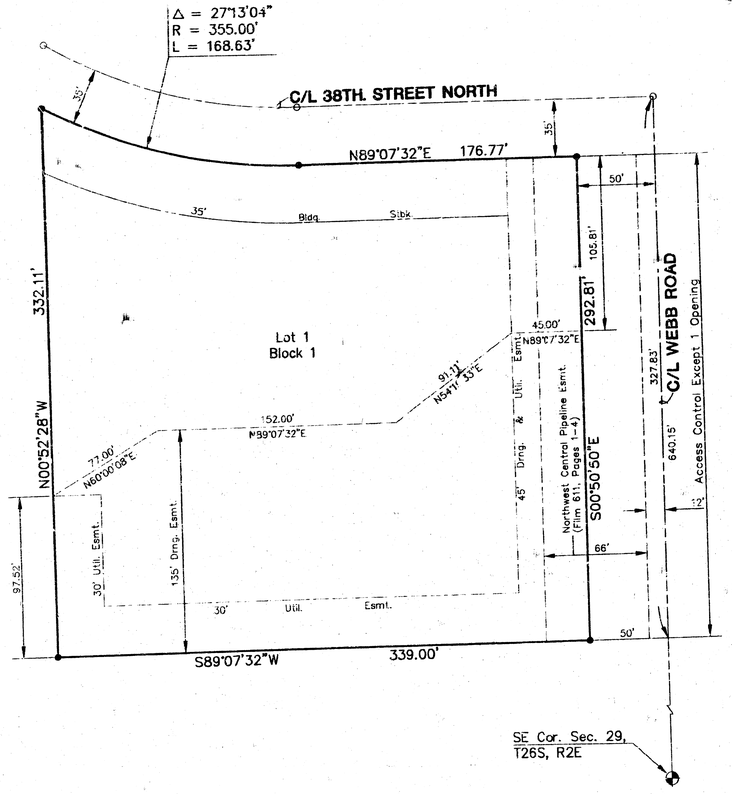

Scale: 1" = 40'

Legend
● – Property Pin Set

I, Kenneth H. Bengtson, a Civil Engineer and Registered Land Surveyor in Kansas, do hereby certify that I have been in responsible charge of surveying and platting of "INDUSTRIAL AIR CENTER SECOND ADDITION" an addition to Wichita, Sedgwick County, Kansas, into a lot and block, the same being accurately set forth in the accompanying plat and described herein:

A replat of Reserve B, INDUSTRIAL AIR CENTER, an addition to Wichita, Sedgwick County, Kansas.

The Reserve and Easement (Film 705, Page 320) within the above describec property is being vacated and replatted by virture of K.S.A. 12-512(b)

I hereby certify that the details of this plat are correct to the best of my knowledge and belief this 15th day of October, 1997.

Kenneth H. Bengtson, P.E., R.L.S.
Mid Kansas Engineering Consultants, Inc.
411 North Webb Road
Wichita, KS 67206

Know all men by these presents that we the undersigned property owners of the land as above set forth in the Civil Engineer's and Registered Land Surveyor's Certificate, have caused the same to be surveyed and platted into a lot and block the same to be known as "INDUSTRIAL AIR CENTER SECOND ADDITION", an addition to Sedgwick County, Kansas. Easements for the construction and maintenance of street, drainage and public utilities as indicated on the accompanying plat, are hereby granted. All abutters rights of access to and from Webb Road over and across the East line of of Lot 1, Block 1, are hereby granted, provided however, except for one opening, as determined by the City Engineer, are hereby granted to the City of Wichita, Kansas.

M & H INVESTMENTS, INC.

Horst K. Hiller, President

STATE OF KANSAS)
) ss:
SEDGWICK COUNTY)

Be it remembered that on this 16th day of October, 1997, before me a Notary Public in and for said State and County, came Horst K. Hiller, President of M & H Investments, Inc., to me personally known to be the same person who executed the foregoing instrument of writing and duly acknowledged the execution of the same.
In notorial seal the same day and year above written.

Notary Public
John H. Moriconi
My Appointment Expires: March 1, 2001

We, Kansas State Bank and Trust Company, Wichita, Kansas, mortgagees on the above described
property, do hereby consent to the plat of INDUSTRIAL AIR CENTER SECOND ADDITION.

KANSAS STATE BANK AND TRUST COMPANY

WILLIAM RANDALL SUMMERS

STATE OF KANSAS)
) ss:
SEDGWICK COUNTY)

Be it remembered that on this 20th day of October, 1997, before me a Notary Public in and for said State and County, came William Randall Summers, to me personally known to be the same person who executed the foregoing instrument of writing and duly acknowledged the execution of the same.
in notorial seal the day and year above written.

Notary Public
John H. Moriconi
My Appointment Expires: March 1, 2001

This plat of "INDUSTRIAL AIR CENTER SECOND ADDITION" has been submitted to and approved by the Wichita-Sedgwick County Metropolitan Area Planning Commission, Wichita, Kansas.

Dated this 15th day of June, 1995.

WICHITA-SEDGWICK COUNTY METROPOLITAN AREA PLANNING COMMISSION

John W. McKay, Jr., Chairman

Marvin S. Krout, Secretary

This plat approved and all dedications shown hereon, if any, accepted by the City Council of the City of Wichita, Kansas, this 25th day of NOVEMBER, 1997.

Bob Knight, Mayor

Pat Burnett, [redacted] City Clerk

Entered on transfer record this 20th day of JANUARY, 1998.

James Alford, County Clerk

STATE OF KANSAS)
) ss:
SEDGWICK COUNTY)

This is to certify that this instrument was filed for record in the Register of Deeds office this 21 day of January, 1998 9:30 AM

Larry Consolver, Register of Deeds

Michael D. Hurtt, Deputy

1660928

Drawing.dwg Wed Aug 09 15:05:07 2000