CONSTRUCTION PLANS

SANITARY SEWER EXTENSIONS

HARBOR ISLE ADDITION - PHASE II

TO

THE CITY OF WICHITA, KANSAS

MICHAEL E. LINDEBAK, P.E. – CITY ENGINEER

LATERAL 84, SANITARY SEWER NO. 23

PROJECT NO. 468-82408

INDEX CODE 742312

GENERAL NOTES:

1. Existing utility lines and their location, as shown on the plans, represent the best information obtainable for design. The contractor will be required to work around existing utilities within the right-of-way which do not conflict with proposed construction.

2. Rubble from the removal of miscellaneous structures and excess excavation which is to be wasted shall be the disposed of on sites to be provided by the Contractor. These sites shall be approved by the Engineer as to suitability, appearance and site location. Locations that, in the opinion of the Engineer, will leave an unsightly appearance will not be approved.

   All disposal sites must be approved by the Kansas Department of Health and Environment. Material either stockpiled or disposed of in a flood plain would require a Kansas State Board of Agriculture permit. Any material dumped in waters of the United States or wetlands is subject to U.S. Corps. of Engineers permitting regulations. Any material buried or stockpiled beyond approved construction limits would require additional archaeological investigations unless buried in a previously approved borrow location.

3. The Contractor shall be responsible for maintaining continuous flow of sewage through construction. Contractor's proposed method for maintaining sewage flow shall be approved by the Engineer. Cost of maintaining flow of sewage through construction will not be paid for directly and this cost shall be considered as subsidiary to the other pay items of the work.

4. The Contractor shall be responsible for preserving property irons. The Contractor will be required to re-establish any property irons which are damaged or destroyed by his construction operations. Such irons shall be re-established by a licensed land surveyor or a licensed professional engineer in accordance with state laws.

5. Trees and shrubs in public right-of-way which are in direct conflict with proposed new construction shall be removed by the Contractor with the Engineer's approval. Trees and shrubs which are not in direct conflict with the proposed new construction shall be saved and protected from damage.

6. Contractor shall vacuum test all manholes according to the City of Wichita standard specifications.

7. The sewer line Contractor will not be required to complete easement grading.

8. All disturbed areas shall have temporary grass seeding applied at a rate of 250 lbs/acre.

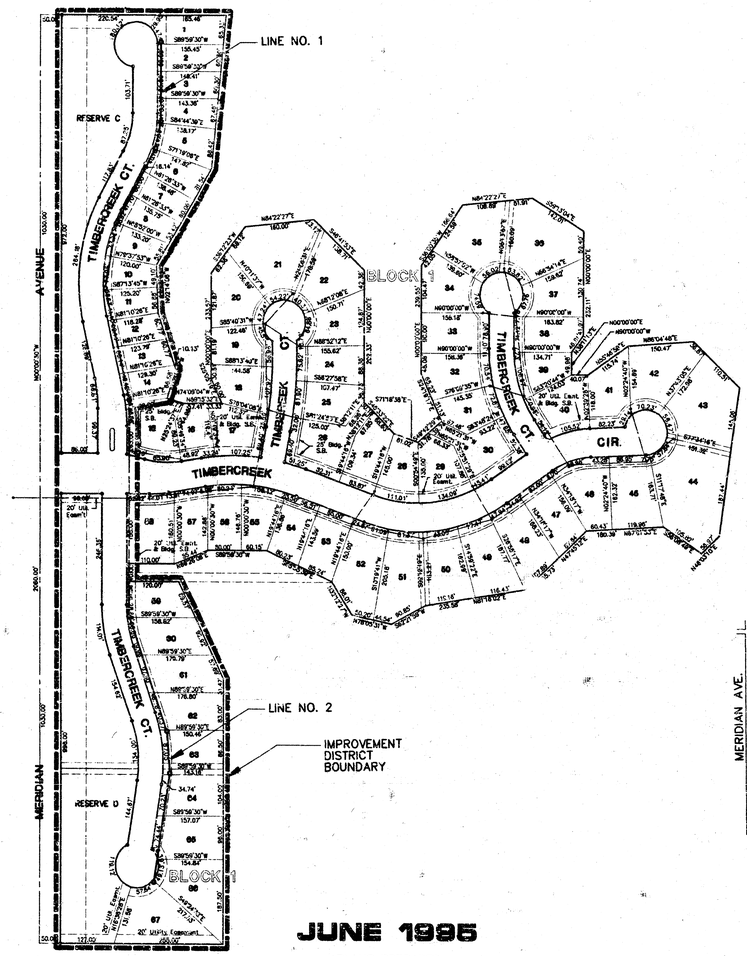

Scale 1" = 150'

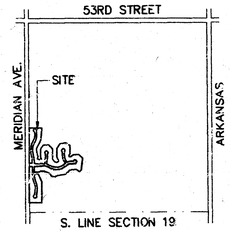

LOCATION MAP
NO SCALE

INDEX

TITLE SHEET	SHEET 1
LINE NO. 1	SHEET 2
LINE NO. 2	SHEET 3
TYPE "P" MANHOLE	SHEET 4
TYPE "C" MANHOLE	SHEET 5
VERTICAL RISER DETAIL	SHEET 6
HARBOR ISLE ADDITION PLAT	SHEET 7

BENCH MARKS

(City of Wichita Datum)

1. "□" Cut in S. Hdwl. of Culvert @ 45th & Meridian.
   Elev. 141.07
2. City of Wichita Disc @ NW. Cor of Keywest & Meridian.
   Elev. 141.85
3. "□" Cut on top of curb on W. end of median @ Timbercreek Cir. & Meridian.
   Elev. 142.33

Booked Per PLAN 1/10/96

KENNY E. HILL LICENSED 7690 PROFESSIONAL ENGINEER

8-14-96

JUNE 1995

PLANS PREPARED BY

POE & ASSOCIATES OF KANSAS, INC.

Consulting Engineers

434 N. Oliver Suite 110 Wichita KS 67208 316/685-4114

F:\APPS\DCA\P\568A\BSNL-F22 Tue Aug 1 16:23:55 1995 Steve Schmidt Poe & Assoc

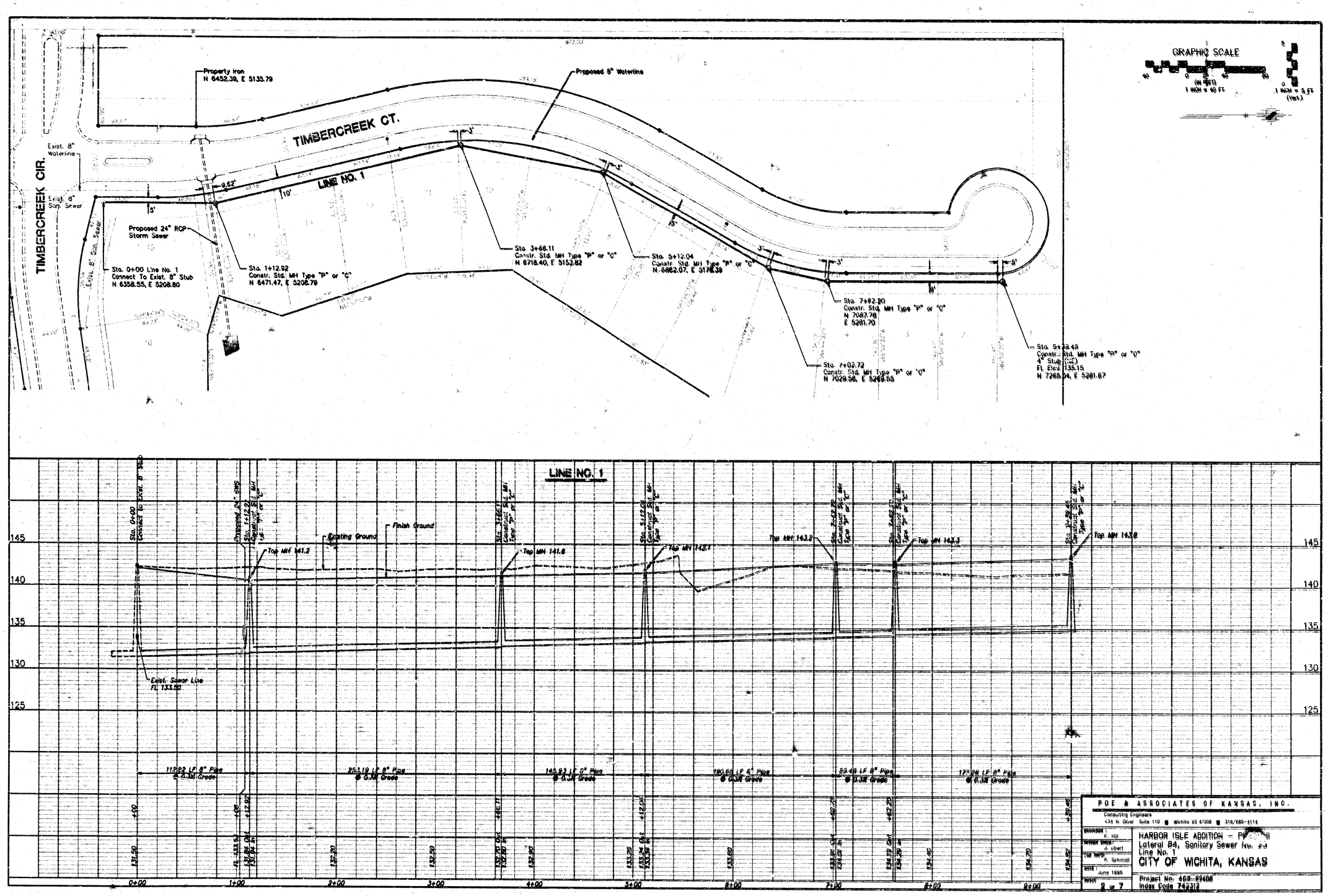

POE & ASSOCIATES OF KANSAS, INC.
Consulting Engineers
434 N. Oliver Suite 110 ■ Wichita KS 67208 ■ 316/685-4114

ENGINEER: K. Hill	HARBOR ISLE ADDITION – P[illegible]
DRAWN BY: J. Ubert	Lateral B4, Sanitary Sewer No. [illegible]
CAD TECH: R. Schmidt	Line No. 1
DATE: June 1995	CITY OF WICHITA, KANSAS
SHEET 2 of 7	Project No. 468-89408 Index Code 742312

F:\APPS\DCA\P\566A\BSK-F22 Wed Aug 2 08:22:35 1995 Steve Schmidt Poe & Assoc.

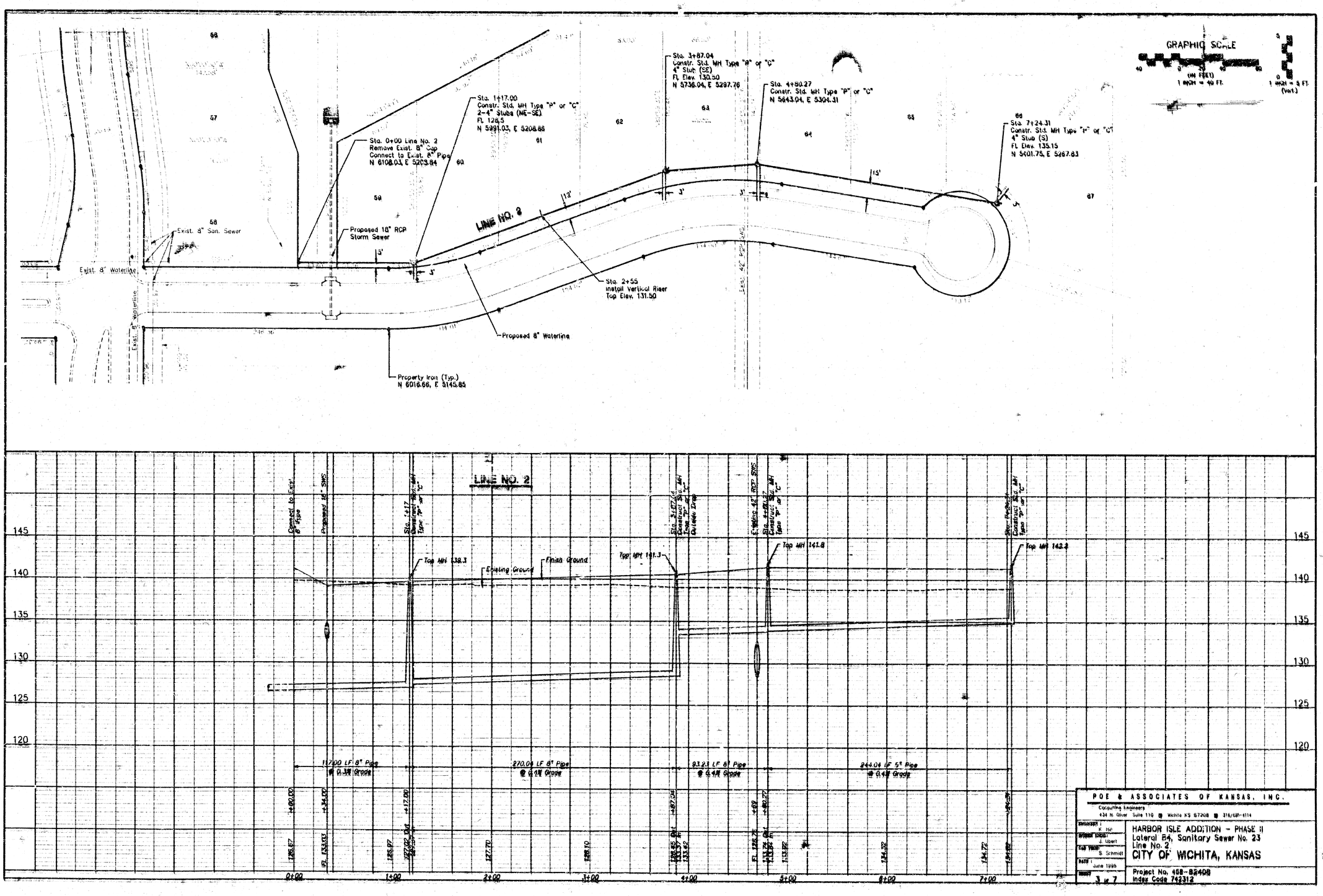

POE & ASSOCIATES OF KANSAS, INC.
Consulting Engineers
434 N. Oliver Suite 110 ■ Wichita KS 67208 ■ 316/685-4114

ENGINEER: K. Hill	HARBOR ISLE ADDITION - PHASE II
INTERNAL CHECK: J. Ubert	Lateral B4, Sanitary Sewer No. 23
CAD TECH: S. Schmidt	Line No. 2
DATE: June 1995	CITY OF WICHITA, KANSAS
SHEET: 3 of 7	Project No. 458-82408 Index Code 742312

SEWER APPURTENANCES DETAILS
ADOPTED AS STANDARD DESIGN
BY
CITY OF WICHITA

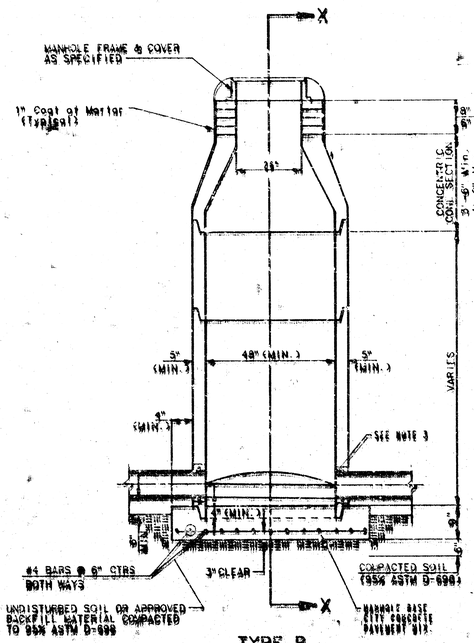

TYPE P
STANDARD MANHOLE

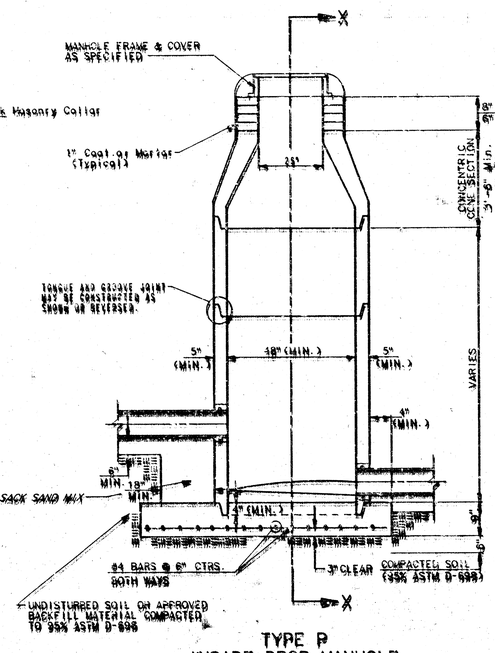

TYPE P
INSIDE DROP MANHOLE

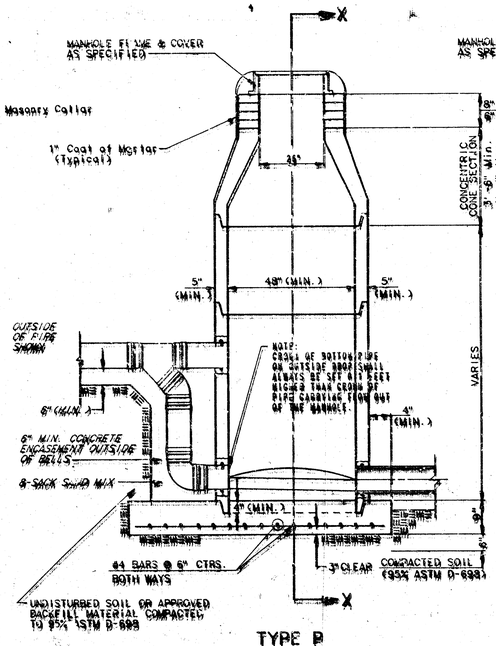

TYPE P
OUTSIDE DROP MANHOLE

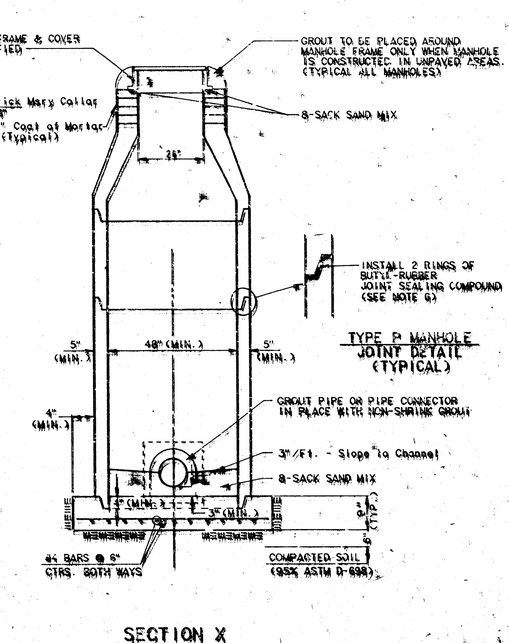

SECTION X
(TYPICAL)

GENERAL NOTES

PRECAST MANHOLE NOTES

1. ALL PRECAST CONCRETE MANHOLE SECTIONS SHALL CONFORM TO THE LATEST ASTM C478 SPECIFICATIONS.
2. NON-SHRINK GROUT SHALL BE NON-METALLIC TYPE.
3. APPROVED FLEXIBLE WATERSTOP GASKETS SHALL BE INSTALLED TO JOIN THE SEWER TO THE MANHOLE WALL WHEN P.V.C. COMPOSITE SEWER PIPE IS USED. ALL OTHER TYPES OF PIPE ENTERING THE SEWER SHALL BE GROUTED IN PLACE WITH NON-SHRINK GROUT. The SEWER PIPE SHALL BE SUPPORTED WITH CONCRETE CRADLE, CONCRETE ENCASEMENT, OR CONCRETE ARCH WHERE THE MANHOLE FILL HEIGHT IS NOT MORE THAN 3 FEET FROM THE TOP OF THE PIPE TO THE FINISH GRADE OF THE MANHOLE FILL.
4. ALL INSIDE SURFACES OF THE CONCRETE MANHOLE WHICH WOULD BE EXPOSED TO SEWER GAS SHALL BE COATED WITH 2 COATS (MINIMUM DRY FILM THICKNESS OF 5 MILS EACH) OF AMERON A-24 EPOXY, OR APPROVED EQUAL.
5. EXTERIOR MANHOLE WALLS SHALL BE COATED WITH 1 COAT BOSTIK #300 BITUMASTIC COATING.
6. JOINT SEALING COMPOUND SHALL BE KENT SEAL NO. 2 OR APPROVED EQUAL.
7. PRECAST MANHOLES SHALL BE SET AT LEAST 4 INCHES INTO THE MANHOLE BASE.
8. TOP OF MANHOLE FLOOR SLAB SHALL BE AT LEAST 3 INCHES BELOW THE FLOW LINE OF THE SHAPED FLOW TO INSURE SUFFICIENT MINIMUM THICKNESS OF SHAPED INVERT.
9. LIFTING HOLES SHALL BE FILLED WITH NON-SHRINK GROUT AND THE INTERIOR SURFACE COATED AS SPECIFIED.
10. MANHOLE BASE AND MASONRY CONSTRUCTION SHALL CONFORM TO CITY OF WICHITA STANDARD SPECIFICATIONS. MANHOLE BASES SHALL BE CONSTRUCTED OF CONCRETE PLACED AGAINST UNDISTURBED EARTH. CONCRETE SHALL BE PLACED AROUND ALL PIPES ENTERING THE MANHOLE WITHOUT AIR SPACES. CONCRETE SHALL BE PLACED AROUND THE MANHOLE BASE AND SHALL EXTEND TO THE TOP OF THE MANHOLE BASE. WHERE PIPE ENTERS MANHOLES WITH CONCRETE ARCH OR CRADLE, THE CONCRETE SHALL BE PLACED AGAINST UNDISTURBED EARTH. MANHOLE BASES SHALL BE PLACED WITHOUT JOINTS WHERE POSSIBLE. ALL CONSTRUCTION JOINTS SHALL BE KEYED. ALL MANHOLES SHALL BE WATER TIGHT.
11. REINFORCING STEEL SHALL BE INSTALLED IN THE MANHOLE BASES AND SLAB COMPOSED OF #4 BARS PLACED ON 6" CENTERS IN BOTH DIRECTIONS. THE MANHOLE BASE REINFORCEMENT SHALL BE PLACED AT LEAST 3" ABOVE THE BOTTOM OF MANHOLE BASE AT ALL POINTS FOR FINISHING INSTRUCTIONS, REINFORCING STEEL SHALL BE INCLUDED IN THE UNIT PRICE BID FOR THE MANHOLE.
12. OPENINGS SHALL BE CUT INTO THE MANHOLE WALL WHEN OUTSIDE DROPS ARE CONSTRUCTED ON EXISTING MANHOLES. SAW OPENINGS CUT INTO EXISTING MANHOLES SHALL BE AS SMALL AS PRACTICAL TO FACILITATE INSTALLING AND GROUTING THE NEW PIPE IN PLACE. PRIOR TO OUTSIDE DROP MANHOLES SHALL BE PLACED WITH P.V.C. AND A.B.S. COMPOSITE PIPE, THE NEW PIPE SHALL BE GROUTED INTO THE OPENING USING AN APPROVED NON-SHRINK GROUT FOR THE FULL MANHOLE WALL THICKNESS. THE EXTERIOR OF THE COMPLETED CONNECTION SHALL BE SEALED WITH AN APPROVED BITUMINOUS COATING SUCH THAT THE CONNECTION WILL BE WATER TIGHT. FLOOR OF MANHOLE SHALL BE SHAPED TO FORM NEW FLOW CHANNEL FOR THE NEW CONNECTION AS INDICATED BY THE DRAWING. THIS WORK, INCLUDING MODIFICATION OF MANHOLE FLOOR, SHALL BE PAID FOR AT THE UNIT PRICE BID FOR OUTSIDE DROP STACK CONSTRUCTED ON EXISTING MANHOLE.
13. THE FLOORS OF ALL MANHOLES SHALL BE SHAPED WITH FLOW CHANNELS SUCH THAT THE MANHOLE WILL BE SELF CLEANSING AND FREE OF AREAS WHERE SOLIDS CAN BE DEPOSITED AS SEWAGE FLOWS THROUGH THE MANHOLE. FROM ALL INCOMING SIDES OF MANHOLES OTHER THAN THE PIPE TO BE FORCED FLOW THE BOTTOM WIDTHS OF THE INCOMING PIPES AND THE OUTFLOWING PIPE AS SHOWN ON THE DRAWINGS EXCEPT FOR INSIDE DROP MANHOLES. FLOW CHANNELS FOR INSIDE DROP MANHOLES SHALL BE CONSTRUCTED AS INDICATED BY THE DRAWING. MANHOLE SHALL BE CONSTRUCTED SO THAT THE AREAS OUTSIDE OF THE FLOW CHANNELS SLOPE TOWARD THE FLOW CHANNELS. PIPES LAID THROUGH MANHOLES SHALL HAVE THE TOP HALF OF THE PIPE REMOVED FOR THE FULL LENGTH WITHIN THE MANHOLE. A MORTAR FILLET SHALL THEN BE SCORED AROUND THE BOTTOM HALF OF THE PIPE WHICH FORMS THE FLOW CHANNEL.
14. PIPES INSTALLED WITHIN THE EXCAVATION MADE FOR THE MANHOLE SHALL BE GROUTED WITH CONCRETE TO THE LIMITS OF THE MANHOLE EXCAVATION. WHEN CLAY PIPE IS USED, THE CRADLE SHALL EXTEND TO THE TOP OF THE PIPE. THE CRADLE SHALL BE REINFORCED WITH THE EQUIVALENT OF AT LEAST ONE LONGITUDINAL #4 BAR. COST OF CRADLE WITHIN MANHOLE BE INCLUDED IN THE UNIT PRICE BID FOR THE MANHOLE.
15. MANHOLE COVER CASTINGS AND MANHOLE FRAME CASTINGS SHALL CONFORM TO THE REQUIREMENTS AS INDICATED IN THE STANDARD SPECIFICATIONS AND AS SHOWN IN THE STANDARD DETAIL DRAWING.
16. THE VERTICAL FREE FALL DROP INSIDE MANHOLES SHALL NOT EXCEED 2'. THE CROWNS OF INFLOWING PIPES SHALL NEVER BE SET LOWER THAN THE CROWN OF THE OUTFLOWING PIPE.
17. STANDARD MANHOLES AND STANDARD INSIDE DROP MANHOLES SHALL BE BID AS STANDARD MANHOLES FOR THE TYPE AND DIAMETER INDICATED. OUTSIDE DROP MANHOLES SHALL BE BID AS STANDARD OUTSIDE DROP MANHOLES FOR THE TYPE AND DIAMETER INDICATED. ALL MANHOLE DIAMETERS WILL BE 4' UNLESS INDICATED OTHERWISE.
18. A BRICK MASONRY COLLAR SHALL BE INSTALLED BETWEEN THE CAST IRON FRAME AND THE CONCENTRIC CONE. THE COLLAR WILL MAKE AT WALLS AND A VERTICAL DEPTH OF 6" MINIMUM AND 18" MAXIMUM. A 1" COAT OF MORTAR WILL BE PLASTERED ON THE OUTSIDE OF THE COLLAR.

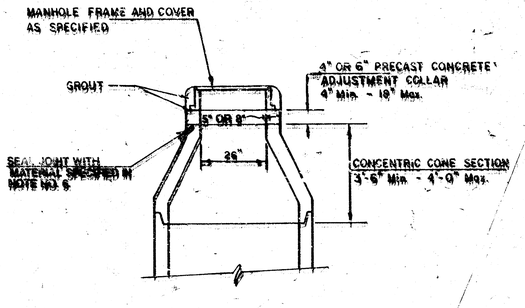

ALTERNATE CONSTRUCTION
IN UNPAVED AREAS

4/7

HARBOR ISLE ADDITION
PHASE II
PROJECT NO. 468-82408
INDEX CODE 749312
REVISED NOV. 1993
NOTE NO. 19 REVISED MAR. 1991
Revised 5-21-89
Revised 4-10-88
Revised: June 12, 1986

JOB 151

SEWER APPURTENANCES DETAILS

ADOPTED AS STANDARD DESIGN
BY
City of Wichita, Kansas

STANDARD MANHOLE TYPE "C"

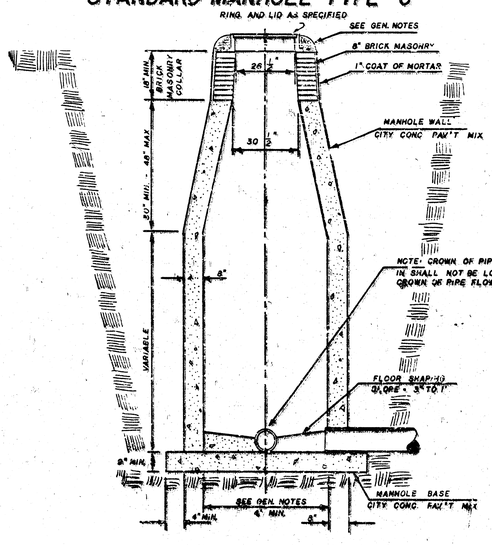

INSIDE DROP MANHOLE TYPE "C"

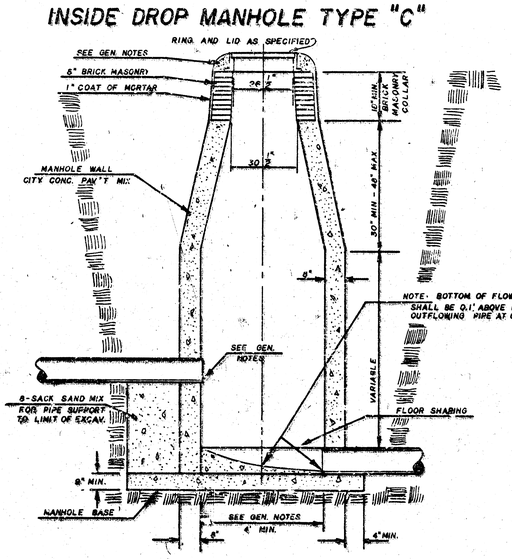

OUTSIDE DROP MANHOLE TYPE "C"

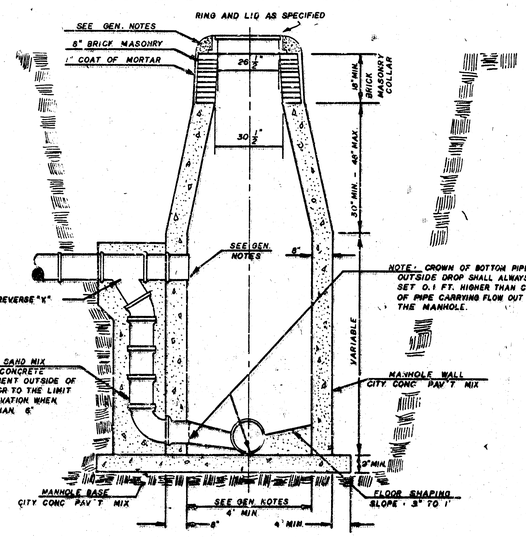

GENERAL NOTES

1. MORTAR USED IN MASONRY CONSTRUCTION SHALL CONTAIN 6 SACKS OF CEMENT PER CUBIC YARD. CONCRETE USED IN MANHOLE WALLS AND BASES SHALL CONFORM TO THE REQUIREMENTS OF CONCRETE FOR CONCRETE PAVEMENT CONSTRUCTION AS SPECIFIED IN THE CITY STANDARD PAVING SPECIFICATIONS USING CITY CONCRETE PAVEMENT MIX WITHOUT AIR ENTRAINING ADMIXTURE. MORTAR SHALL BE PLACED AROUND THE MANHOLE RING AS SHOWN ON THE DRAWINGS WHEN MANHOLES ARE CONSTRUCTED IN UNPAVED AREAS. TYPE "C" MANHOLES CAN BE CONSTRUCTED ONLY WHERE PIPE SIZES ARE 8" OR SMALLER. THE INSIDE DIAMETER OF TYPE "C" MANHOLES SHALL BE 4'. COMPLETED MANHOLE SHALL BE WITHOUT LEAKS AND WATER TIGHT.

2. REINFORCING STEEL SHALL BE INSTALLED IN THE MANHOLE BASE. REINFORCING STEEL SHALL CONSIST OF NO. 4 BARS PLACED ON 6" CENTERS IN BOTH DIRECTIONS. REINFORCING STEEL SHALL BE PLACED 6" ABOVE THE BOTTOM OF THE MANHOLE BASE. COST OF FURNISHING AND INSTALLING REINFORCING STEEL SHALL BE INCLUDED IN THE UNIT PRICE BID FOR THE MANHOLE.

3. AN OPENING SHALL BE CUT IN THE MANHOLE WALL FOR THE UPPER INLET PIPE FOR INSIDE AND OUTSIDE DROP MANHOLES. THE UPPER INLET PIPE SHALL BE GROUTED INTO THIS OPENING WITH NON-SHRINK GROUT. THE EXTERIOR OF THIS COMPLETED CONNECTION SHALL BE SEALED WITH AN APPROVED BITUMINOUS COATING SUCH THAT THE CONNECTION WILL BE WATER TIGHT.

4. THE FLOORS OF ALL MANHOLES SHALL BE SHAPED WITH FLOW CHANNELS SUCH THAT THE MANHOLES WILL BE SELF CLEANING AND FREE OF AREAS WHERE SOLIDS COULD BE DEPOSITED AS SEWAGE FLOWS THROUGH THE MANHOLE FROM ALL INLET PIPES TO THE OUTLET PIPE. FLOW CHANNELS SHALL BE FORMED TO MATCH THE BOTTOM HALVES OF THE INFLOWING PIPES AND THE OUTFLOWING PIPE AS SHOWN BY THE DRAWINGS EXCEPT FOR INSIDE DROP MANHOLES. FLOW CHANNELS FOR INSIDE DROP MANHOLES SHALL BE CONSTRUCTED AS INDICATED BY THE DRAWING. MANHOLE FLOORS SHALL HAVE SLOPES OF 3 INCHES PER FOOT IN THE AREAS OUTSIDE OF THE FLOW CHANNELS SLOPED TOWARD THE FLOW CHANNELS. PIPES LAID THROUGH MANHOLES SHALL HAVE THE TOP HALF REMOVED TO MEET LINES FOR THE FULL INSIDE DIAMETER OF THE MANHOLE. MANHOLE FLOORS SHALL THEN BE SHAPED AROUND THE BOTTOM HALF OF THE PIPE WHICH FORMS THE FLOW CHANNEL.

5. PIPES INSTALLED WITHIN THE EXCAVATION MADE FOR THE MANHOLE SHALL BE CRADLED WITH CONCRETE TO THE LIMITS OF THE MANHOLE EXCAVATION. WHEN CLAY PIPE IS USED, THE CRADLE SHALL EXTEND TO THE FIRST JOINT OUTSIDE THE MANHOLE. THE CRADLE SHALL BE TERMINATED AT THE CLAY PIPE JOINT IN A MANNER WHICH WILL MAINTAIN THE FLEXIBILITY OF THE JOINT. COST OF CRADLE WITHIN MANHOLE EXCAVATION OR TO CLAY PIPE JOINTS ADJACENT TO MANHOLE SHALL BE INCLUDED IN THE UNIT PRICE BID FOR THE MANHOLE.

6. MANHOLE COVER CASTINGS AND MANHOLE FRAME CASTINGS SHALL CONFORM TO THE REQUIREMENTS AS INDICATED IN THE STANDARD SPECIFICATIONS AND AS SHOWN IN THE STANDARD DETAIL DRAWING.

7. THE VERTICAL **FREE FALL DROP INSIDE MANHOLES SHALL NOT EXCEED 2'.**

   THE CROWNS OF INFLOWING PIPES SHALL NEVER BE SET LOWER THAN THE CROWN OF THE OUTFLOWING PIPE.

8. STANDARD MANHOLES TYPE "C" AND STANDARD INSIDE DROP MANHOLES TYPE "C" SHALL BE BID AS STANDARD MANHOLES FOR THE TYPE AND DIAMETER INDICATED. OUTSIDE DROP MANHOLES TYPE "C" SHALL BE BID AS STANDARD OUTSIDE DROP MANHOLES FOR THE TYPE AND DIAMETER INDICATED. ALL MANHOLE DIAMETERS WILL BE 4' UNLESS INDICATED OTHERWISE.

JNL JAN. 1982

HARBOR ISLE ADDITION
PHASE II
PROJECT NO. 468-82408
INDEX CODE 742312
NOTE NO. 7 REVISED JAN. 1991

5/7

VERTICAL RISER DETAILS
ADOPTED AS STANDARD DESIGN
BY
CITY OF WICHITA, KANSAS
OCTOBER 1992

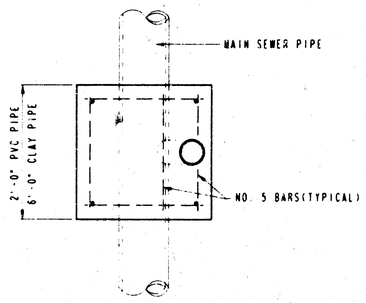

TYPICAL PLAN VIEW

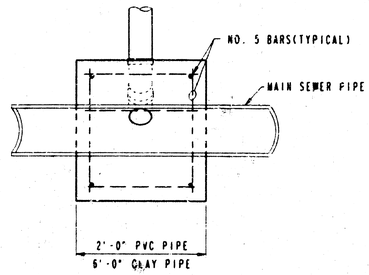

TYPICAL SECTION X-X

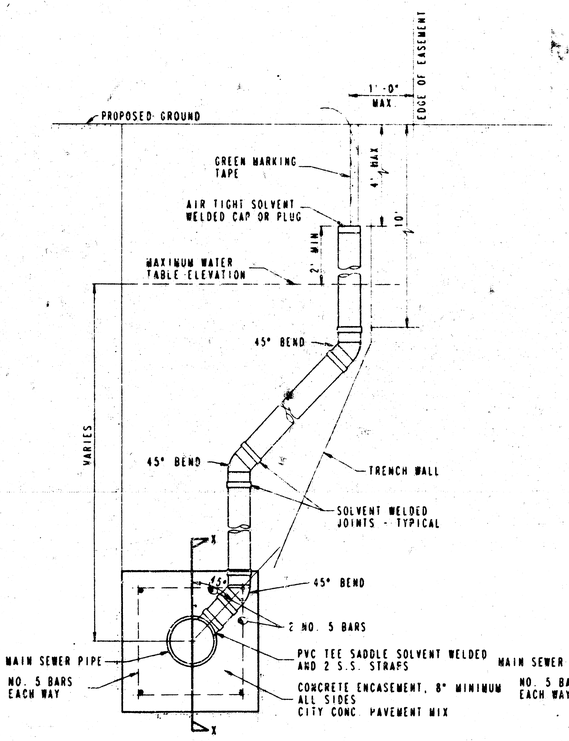

METHOD "A"

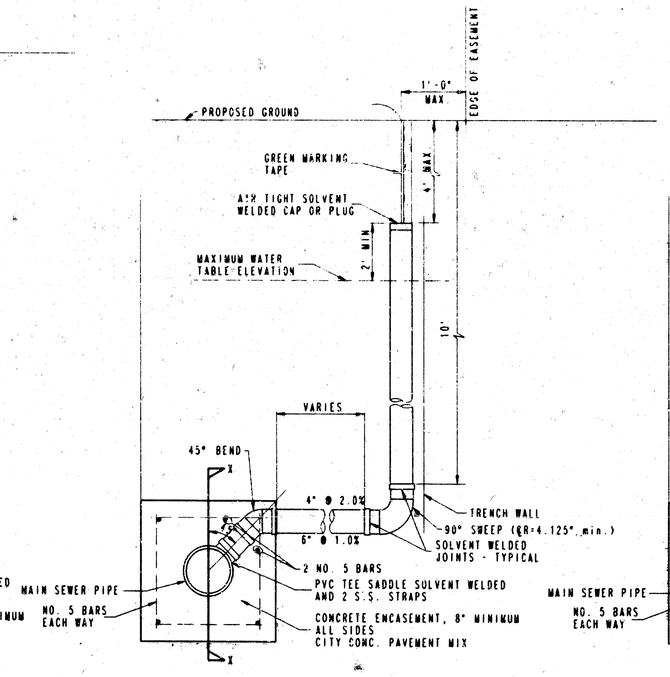

METHOD "B"

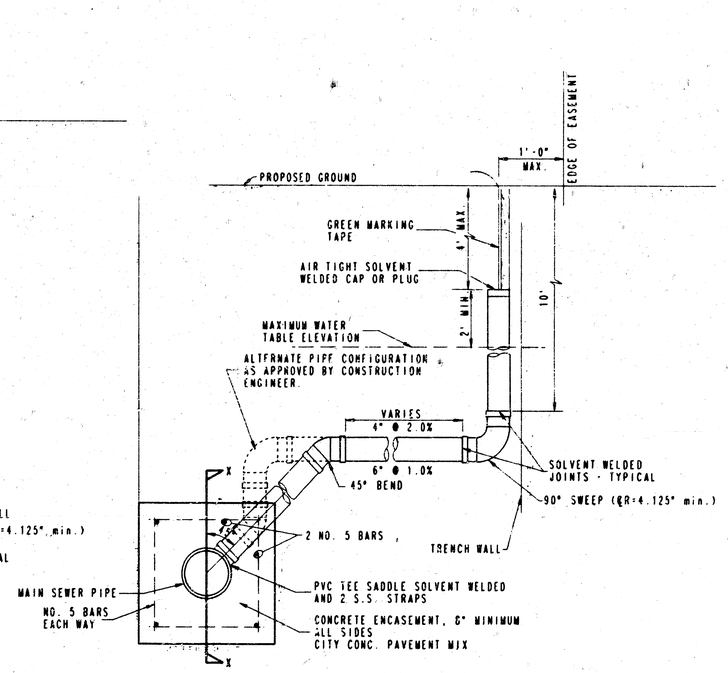

METHOD "C"

NOTE: RISER PIPE REQUIREMENTS AT MANHOLE STUBS SHALL BE SIMILAR TO THOSE SHOWN ABOVE.

GENERAL NOTES

1. RISERS. Risers shall be installed to serve all lots or tracts where the sanitary sewer main is below the water table. Risers shall also be installed to serve all lots and tracts where the sanitary sewer main depth is greater than 12 feet below the proposed ground elevation. Installation of risers because of field conditions shall be as approved by the Construction Engineer. The location of the risers to serve developed property shall be approved by the property owner and the Construction Engineer.

2. PIPE STUBS. Pipe stubs shall be installed in manholes where locations of manholes will provide satisfactory service connection as determined by the Construction Engineer. The vertical distance between the flowline of the manhole pipe stub and the flowline of the sanitary sewer main out of the manhole shall not exceed 7 feet. Risers shall be utilized at possible pipe stubs as indicated in Note 1. Manhole pipe stubs shall be set such that the top of the stub is not lower than the top of the sanitary sewer main.

3. SIZING. Pipe stubs and risers shall be sized according to the plans and riser table where risers are indicated by the plan. Where risers or pipe stubs are required because of field conditions, the risers and stubs shall be six-inch diameter for commercial or industrial properties and 4" or 6" diameter for residential properties, based on lot size and sanitary sewer main depth. Sizing of risers and stubs shall be approved by the Construction Engineer prior to installation.

4. RISER OR STUB MATERIAL. Risers and stubs shall be constructed of SDR 35 PVC Pipe or Schedule 40 PVC Pipe, meeting the requirements of the latest revision of A.S.T.M. All pipe joints shall be solvent welded.

5. REINFORCED CONCRETE ENCASEMENT. Riser connections to clay pipe sanitary sewers shall be reinforced concrete encased both ways from the riser centerline. The reinforced concrete encasement shall extend three feet from the riser centerline or stop at the first sanitary sewer pipe joint within three feet of the riser centerline. Riser connections to PVC Sanitary Sewer mains shall be reinforced concrete encased one foot each way from the riser centerline. The concrete encasement shall be reinforced using reinforcing steel as shown in the appropriate drawing. The concrete shall conform to the City Standard Specifications for concrete pavement.

6. BEDDING. Bedding around the sanitary sewer riser shall be compacted Pipe Bedding Type 1 or 2. The bedding shall be placed and compacted from the depth of the sanitary sewer main to the top of the sanitary sewer riser pipe. Compacted Pipe Bedding Type 1 or 2 shall be required for all risers whether constructed in vertical wall or sloped wall trenches. Bedding material and construction practices shall be approved by the Construction Engineer prior to installation.

7. SUPPORT OF RISERS. Sanitary sewer riser pipe shall be supported during trench backfill. The riser pipe shall be held in a vertical position at all times until trench backfill and compaction has been completed. Contractor's methods for supporting and backfilling the riser pipe shall be approved by the Construction Engineer.

8. PLUGGING. The ends of the riser pipes and manhole stubs shall be plugged using an airtight solvent welded cap or plug. Cap or plug fittings shall be approved by the Construction Engineer prior to installation. Caps or plugs which do not provide an airtight seal will not be accepted.

9. TOP OF THE RISER PIPE. The top elevation of the sanitary sewer riser pipe shall be built per plan elevations, unless otherwise directed by the Construction Engineer. Where riser elevations are not shown on the plans, the top of the risers shall be set at an elevation four feet below the proposed ground surface. If ground water is encountered, the top of the riser pipe shall be set at an elevation two feet (min.) above the maximum water table elevation, regardless of the riser elevation shown on the plans.

10. MARKING. Locations of the ends of the sanitary sewer riser pipe shall be marked by fastening green colored plastic tape to the end of the riser. The tape shall be supported by a length of wooden 2 x 4, extending from the top of the riser pipe to the proposed ground surface. The green tape shall be visible and extend one foot above the proposed ground surface. The green tape shall be 4 mil Polyethylene film with a minimum width of three inches, specifically manufactured for the purpose of identification of underground sewers.

11. LOCATION MEASURES. The project inspector shall record and document the location of all risers constructed as measured from the nearest manhole, indicating the direction from the manhole, the direction and distance from the main, riser size, and elevation of the top of the riser.

12. RISER LOCATION. The riser shall be located per plan. If shown if not shown on the plan, the riser shall be located at the center of the lot, within one foot of the property side of the easement for the lot being served. All riser locations shall be approved by the Construction Engineer prior to installation.

13. PAYMENT. "Sanitary sewer risers" shall be paid for at the contract unit price per each, which price shall be full compensation for all pipe, fittings, marking tape, length of wooden 2 x 4, reinforced concrete encasement, support during backfill, backfill, labor, site restoration, and any other items necessary to complete the work.

"Manhole stubs" shall be paid for at the contract unit price per each, which shall be full compensation for all labor, material, and incidentals necessary to complete the work including all pipe, fittings, reinforced concrete encasement, and all other items as required and listed for "Sanitary Sewer Risers".

PLAN | CHECKED | CHECKED | BY | DATE

HARBOR ISLE ADDITION
PHASE II
PROJECT NO. 468-82408
INDEX CODE 742312

11-1-01

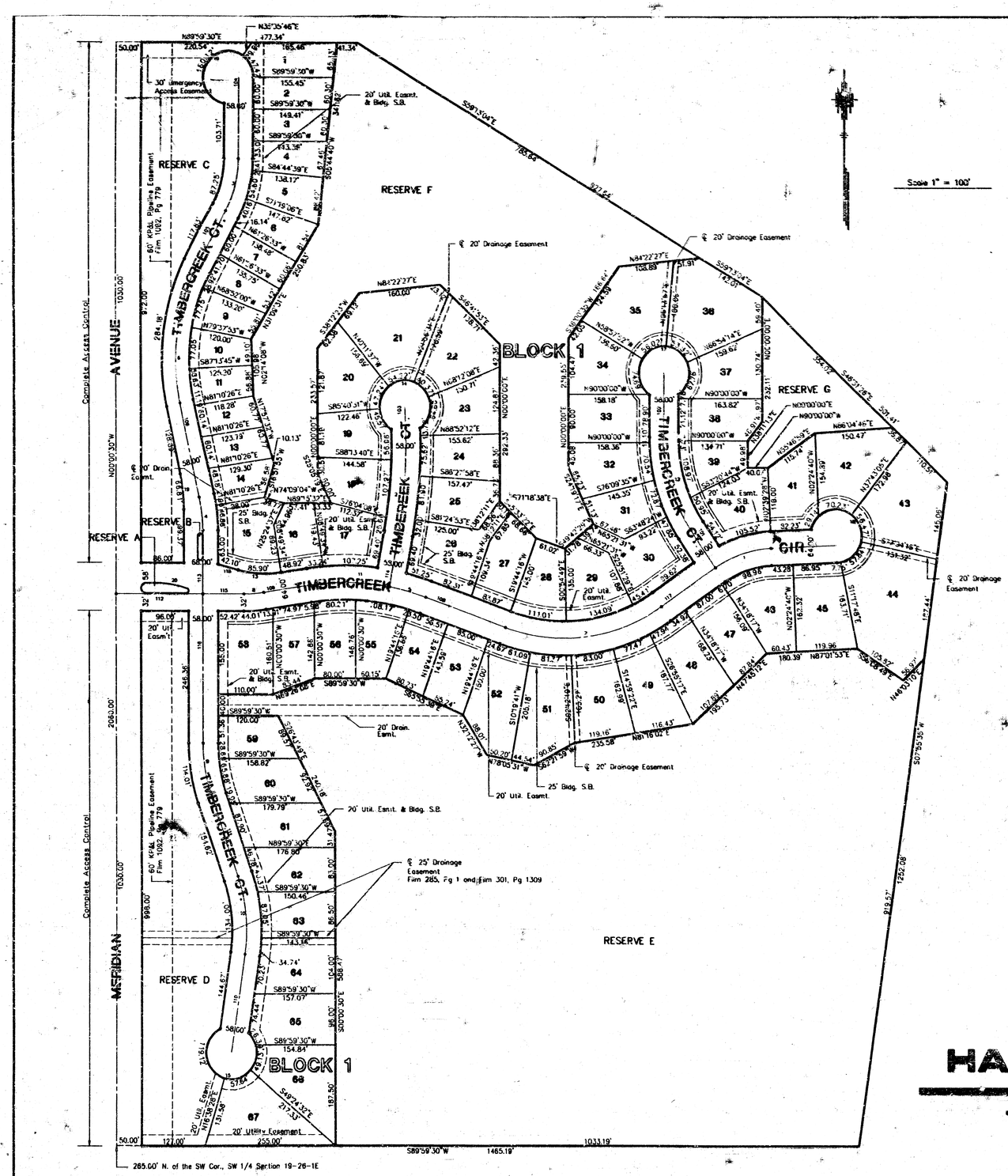

CURVE	RADIUS	LENGTH	TANGENT	CHORD	BEARING	DELTA
1	209.78'	116.77'	59.94'	115.27'	S71°38'32"W	31°53'37"
2	900.00'	197.27'	99.03'	196.89'	N04°16'46"E	12°33'32"
3	204.00'	101.71'	51.93'	100.66'	N14°16'29"E	28°33'57"
4	280.00'	62.36'	31.31'	62.23'	N06°23'19"W	12°45'38"
5	469.00'	75.14'	37.65'	75.05'	N74°51'06"W	09°10'44"
6	365.00'	263.27'	137.65'	257.60'	S07°53'40"W	41°19'35"
7	340.00'	320.69'	173.40'	308.94'	N82°43'00"E	54°02'33"
8	254.00'	39.09'	19.58'	39.05'	N85°34'58"E	08°49'04"
9	311.00'	104.29'	52.64'	103.80'	S09°36'54"E	19°12'48"
10	305.00'	148.08'	75.53'	146.63'	N05°18'46"W	27°49'04"
11	469.00'	158.68'	80.10'	157.92'	N89°08'01"W	19°23'06"
12	309.00'	185.01'	95.37'	182.26'	S17°09'08"E	34°18'17"
13	210.00'	85.90'	43.56'	85.31'	S87°06'26"E	23°26'15"
14	50.00'	252.29'	35.60'	58.00'	S88°00'00"W	289°05'56"
15	50.00'	252.29'	35.60'	58.00'	S81°24'15"E	289°05'56"
16	50.00'	227.58'	58.76'	76.16'	S49°35'42"W	260°47'35"
17	50.00'	252.29'	35.60'	58.00'	N90°00'00"W	289°05'56"
18	50.00'	221.43'	66.67'	80.00'	N39°16'51"W	253°44'23"
19	300.00'	66.81'	33.55'	66.68'	N06°23'19"W	12°45'38"
20	201.24'	64.15'	32.35'	63.88'	N80°52'36"W	18°15'48"

LINE	DIRECTION	DISTANCE
100	N87°35'20"E	130.23'
101	S34°18'17"E	84.38'
102	N00°00'00"E	119.63'
103	N02°00'00"W	40.34'
104	N00°00'30"W	153.07'
105	N28°33'27"E	117.83'
106	N12°46'03"W	179.65'
108	S70°15'44"E	166.18'
109	N81°10'26"E	88.88'
110	N08°35'45"E	185.40'
111	N19°13'18"W	154.62'
112	S89°59'30"W	175.00'
113	N00°00'30"W	118.69'
114	N10°33'32"E	100.56'
115	S89°59'30"W	81.42'
116	N00°00'30"W	278.36'
117	N55°41'43"E	128.62'
118	N75°23'19"W	42.10'

NOTE:

The minimum low opening elevation for homes built in this addition shall be 134.0 (City of Wichita Datum) 1321.4 (MSL)

The minimum basement floor elevation for homes built in this addition shall be 131.0 (City of Wichita Datum) 1318.4 (MSL)

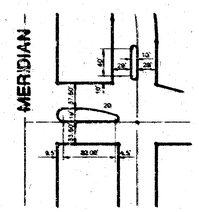

DETAIL RESERVE A AND B

BENCHMARKS

1. "□" cut on southwest corner of north headwall at Meridian Avenue and Milro.
   Elev. 139.65 (City of Wichita Datum)

6-21-94

HARBOR ISLE ADDITION

TO WICHITA - SEDGWICK COUNTY, KANSAS

PROJECT NO. 468-82408
INDEX CODE 742312

18-3-1-1