Sanitary Sewer Extension

To Serve

PMT Addition

LATERAL 125, MAIN 4, SANITARY SEWER 23

Project No.

468-76-245-82272-000-000-001

O.C.A. Number

741447

CITY OF WICHITA, KANSAS

Michael E. Lindebak City Engineer

General Notes

1. Contractor will be required to provide notice to utility companies a minimum of twenty-four (24) hours prior to any excavation, as follows:

   Kansas One-Call 687-2470

   The Contractor must notify the following in case of an emergency:

Cox Communications	262-0651
Kansas Gas Service Company	383-8600
Kansas Gas & Electric Company	383-8600
Peoples Gas Company	942-8350
Southwestern Bell Telephone Company	1-800-344-7233
City of Wichita Water Dept.	268-4908
City of Wichita Traffic Engineering	269-4446

2. Interurban traffic generated outside the project area and local business or apartment traffic generated within the project area are to be carried through construction as further promulgated by project special provisions.

3. Underground utility service lines and overhead utility pole lines are to be adjusted as necessary by others prior to construction unless the plans specifically call for their adjustment by the Contractor or unless the plans specifically identify a utility to be adjusted by its owner during construction. Existing utilities and their location, as shown on the plans, represent the best information obtainable for design. The Contractor will be required to work around existing utilities within the right-of-way which do not conflict with proposed construction.

4. A saw cut of at least one-half the depth of existing surface courses or one-fourth the depth of the existing total pavement thickness shall be provided at locations where proposed construction abuts an existing surface course or pavement for which partial removal of that surface or pavement is required. Sawed joint to facilitate removal within 3 feet (3') of existing joints will not be permitted and for such instances the limits of removal shall extend to the existing joint. Such saw cuts will not be paid for directly and this cost shall be considered as subsidiary to the removal of the surface or pavement.

5. The Contractor shall notify pipeline companies at least 24 hours in advance of any work being performed across and/or adjacent to pipelines.

6. Mailboxes within the limits of the project shall be removed and replaced by the Contractor as approved by the Engineer. Contractor will be required to make satisfactory provisions for mail delivery to properties affected by this project during its construction.

7. Trees and shrubs in public right-of-way which are in direct conflict with proposed new construction shall be removed by the Contractor with the Engineer's approval. Trees and shrubs which are not in direct conflict with proposed new construction shall be saved and protected from damage.

8. The Contractor shall give all property owners and/or tenants of developed property abutting the construction of this project a minimum of ten (10) days advance notice prior to start of construction.

9. The Contractor shall be responsible for maintaining continuous flow of sewage through construction. Contractor's proposed method for maintaining sewage flow shall be approved by the Engineer. Cost of maintaining flow of sewage through construction will not be paid for directly and this cost shall be considered as subsidiary to the other pay items of work.

10. The Contractor shall be responsible for preserving property irons. The Contractor will be required to re-establish any property irons which are damaged or destroyed by his construction operations. Such irons shall be re-established by a licensed land surveyor in accordance with state laws.

11. Pavement removal and/or replacement will be measured and paid for on the lineal foot basis as measured along the center line of the sewer regardless of width or thickness. Minimum limits of such pavement removal and replacement shall be one foot beyond the limits of the excavation made for the sewer or the structure, except where the lines of removal are within three (3) feet of an existing joint the limits of removal shall be extended to the joint. Removal and replacement of existing pavement shall conform to the applicable sections of the City of Wichita Standard Specifications.

12. All areas disturbed by construction operations shall by seeded with rye grass at a rate of 300 lbs/acre immediately following construction in that area. Cost of seeding shall be incidental to "Site Clearing & Restoration." Prior to seeding, area shall be prepared per City Specifications.

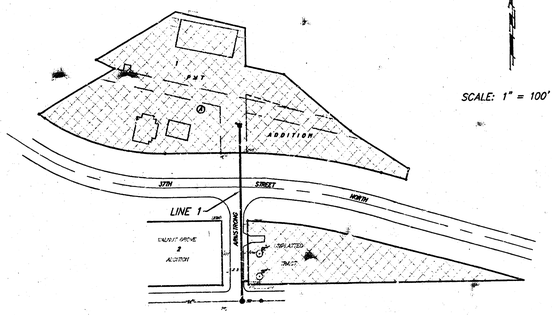

SCALE: 1" = 100'

Project Area

Benefit District

BENCHMARKS:

City Disc 34' E. ℄ Arkansas & 2' S. of S. line 37th Street.
Elev. = 132.09 City Datum

T.B.M. RR Spike in E. side P.P., 81' N. ℄ of 37th Street and 19.5' W. ℄ of Armstrong.
Elev. = 132.98 City Datum

City Disc at top wingwall on S.E. Corner of Bridge over The Big Ditch at 37th Street.
Elev. = 144.74 City Datum

Booked
P. 170
4-26-01
AS BUILT
RPL

Sheet Index

1	TITLE SHEET
2	STANDARD MH DETAIL
3	STANDARD SHALLOW MH DETAIL
4	PLAN & PROFILE SHEET
5	COPY OF PLAT

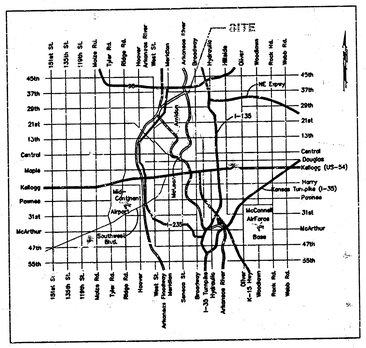

SITE LOCATION MAP



9/00

BAUGHMAN COMPANY P.A.
ENGINEERING, SURVEYING, & PLANNING
316-262-7271 • 315 ELLIS • WICHITA, KANSAS 67211

SEWER APPURTENANCES DETAILS

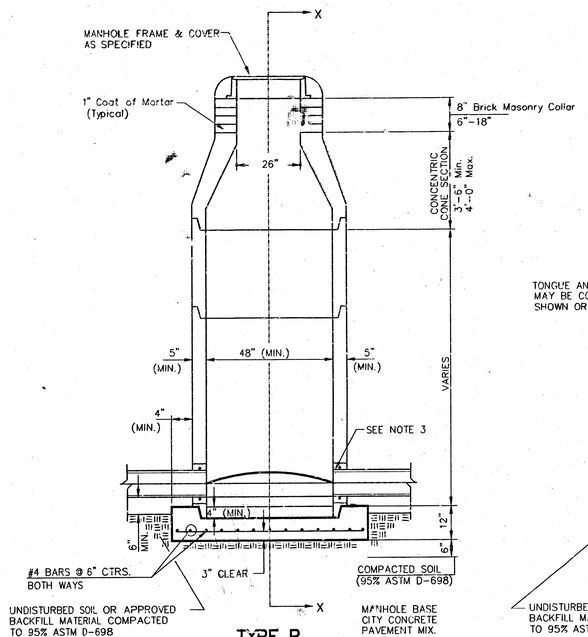

TYPE P STANDARD MANHOLE

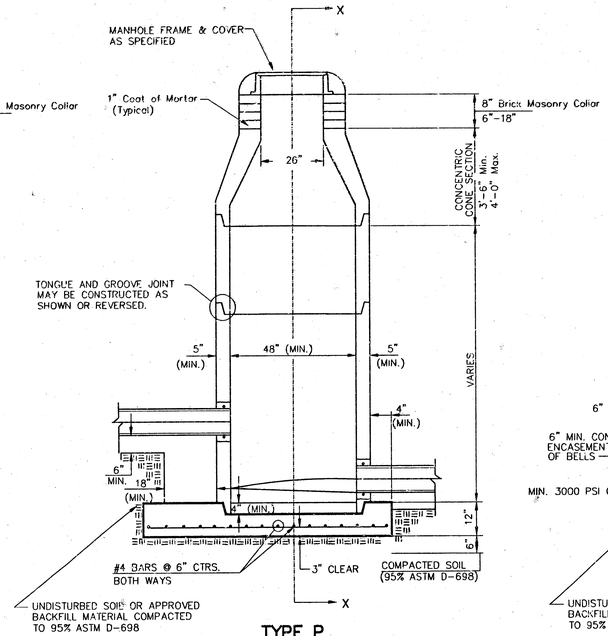

TYPE P INSIDE DROP MANHOLE

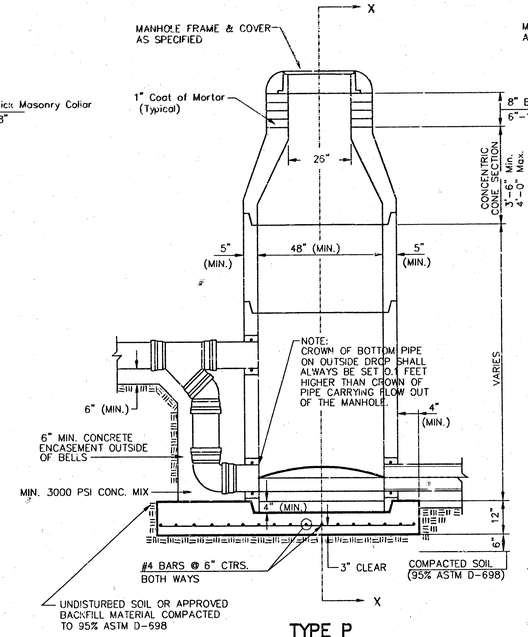

TYPE P OUTSIDE DROP MANHOLE

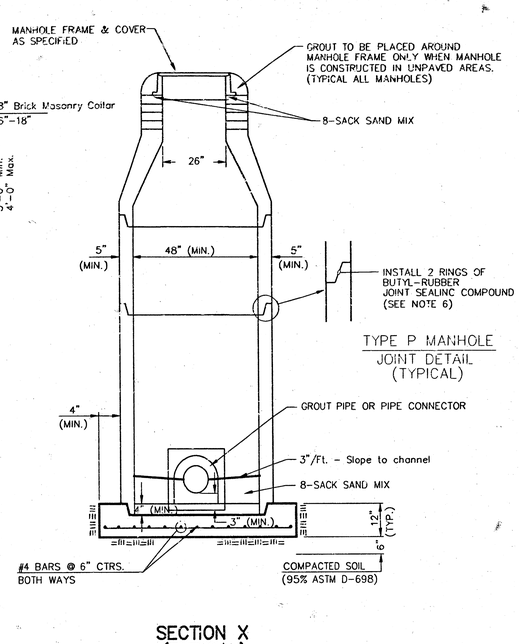

SECTION X (TYPICAL)

GENERAL NOTES

PRECAST MANHOLE NOTES

1. ALL PRECAST CONCRETE MANHOLE SECTIONS SHALL CONFORM TO THE LATEST REVISIONS OF A.S.T.M. C478 AS MODIFIED BY THE SPECIFICATIONS.
2. NON-SHRINK GROUT SHALL BE NON-METALLIC TYPE.
3. APPROVED FLEXIBLE WATERSTOP GASKETS SHALL BE INSTALLED TO JOIN THE SEWER TO THE MANHOLE WALL WHEN A.B.S. COMPOSITE PIPE OR P.V.C. PIPE IS USED. FOR OTHER TYPES OF PIPE THE SEWER SHALL BE GROUTED IN PLACE WITH NON-SHRINK GROUT. THE SEWER PIPE SHALL BE SUPPORTED WITH CONCRETE ENCASEMENT A MINIMUM OF 3 FEET FROM THE MANHOLE WALL AND TO THE FIRST JOINT FOR V.C.P. SUCH THAT THE JOINT REMAINS FLEXIBLE.
4. ALL INSIDE SURFACES OF THE CONCRETE MANHOLE WHICH WOULD BE EXPOSED TO SEWER GAS SHALL BE COATED WITH 2 COATS TNEMEC SERIES 66 HI-BUILD EPOXOLINE, DRY THICKNESS OF 8 MILS (MIN.)
5. EXTERIOR MANHOLE WALLS SHALL BE COATED WITH 1 COAT MOBILARMA 633 BITUMINOUS COATING.
6. JOINT SEALING COMPOUND SHALL BE KENT SEAL NO. 2 OR APPROVED EQUAL.
7. PRECAST MANHOLES SHALL BE SET AT LEAST 4 INCHES INTO THE MANHOLE BASE.
8. TOP OF MANHOLE FLOOR SLAB SHALL BE AT LEAST 3 INCHES BELOW THE FLOW LINE OF THE OUTLET PIPE TO INSURE SUFFICIENT MINIMUM THICKNESS OF SHAPED INVERT.
9. LIFTING HOLES SHALL BE FILLED WITH NON-SHRINK GROUT AND THE INTERIOR SURFACE COATED AS SPECIFIED.
10. MORTAR USED IN MASONRY CONSTRUCTION SHALL CONTAIN 8 SACKS OF CEMENT PER CUBIC YARD. CONCRETE USED IN MANHOLE BASES SHALL CONFORM TO THE REQUIREMENTS OF CONCRETE FOR CONCRETE PAVEMENT CONSTRUCTION AS SPECIFIED IN THE CITY STANDARD PAVING SPECIFICATIONS USING CITY CONCRETE PAVEMENT MIX WITHOUT AIR ENTRAINING ADMIXTURE. MORTAR SHALL BE PLACED AROUND THE MANHOLE RING AS SHOWN ON THE DRAWINGS WHEN MANHOLES ARE CONSTRUCTED IN UNPAVED AREAS. MANHOLES CONSTRUCTED WHERE PIPE SIZES ARE SMALLER THAN 24" SHALL HAVE AN INSIDE DIAMETER OF 4'. MANHOLES CONSTRUCTED WHERE PIPE SIZES ARE 24" OR LARGER SHALL HAVE AN INSIDE DIAMETER OF 5'. COMPLETED MANHOLE SHALL BE WITHOUT LEAKS AND WATER TIGHT.
11. REINFORCING STEEL SHALL BE INSTALLED IN THE MANHOLE BASES AND SHALL CONSIST OF NO. 4 BARS PLACED ON 6" CENTERS IN BOTH DIRECTIONS. THE MANHOLE BASE REINFORCEMENT SHALL BE PLACED AT LEAST 3" ABOVE THE BOTTOM OF THE MANHOLE BASE. ALL COSTS FOR FURNISHING AND INSTALLING REINFORCING STEEL SHALL BE INCLUDED IN THE UNIT PRICE BID FOR THE MANHOLE.
12. OPENINGS SHALL BE CUT INTO THE MANHOLE WALL WHEN OUTSIDE DROPS ARE CONSTRUCTED ON EXISTING MANHOLES. SUCH OPENINGS CUT INTO EXISTING MANHOLES SHALL BE AS SMALL AS PRACTICAL TO FACILITATE INSTALLING AND GROUTING THE NEW PIPE IN PLACE. WATERSTOP GASKETS SHALL BE USED WITH P.V.C. AND A.B.S. COMPOSITE PIPE. THE NEW PIPE SHALL BE GROUTED INTO THE OPENING USING AN APPROVED NON-SHRINK GROUT FOR THE FULL MANHOLE WALL THICKNESS. THE EXTERIOR OF THE COMPLETED CONNECTION SHALL BE SEALED WITH AN APPROVED BITUMINOUS COATING SUCH THAT THE CONNECTION WILL BE WATER TIGHT. FLOOR OF MANHOLE SHALL BE MODIFIED TO FORM NEW FLOW CHANNEL FOR THE NEW CONNECTION AS INDICATED BY THE DRAWING. THIS WORK, INCLUDING MODIFICATION OF MANHOLE FLOOR, SHALL BE PAID FOR AT THE UNIT PRICE BID FOR OUTSIDE DROP STACK CONSTRUCTED ON EXISTING MANHOLE.
13. THE FLOORS OF ALL MANHOLES SHALL BE SHAPED WITH FLOW CHANNELS SUCH THAT THE MANHOLES WILL BE SELF CLEANING AND FREE OF AREAS WHERE SOLIDS COULD BE DEPOSITED AS SEWAGE FLOWS THROUGH THE MANHOLE FROM ALL INLET PIPES TO THE OUTLET PIPE. FLOW CHANNELS SHALL BE FORMED TO MATCH THE BOTTOM HALVES OF THE INFLOWING PIPES AND THE OUTFLOWING PIPE AS SHOWN BY THE DRAWINGS EXCEPT FOR INSIDE DROP MANHOLES. FLOW CHANNELS FOR INSIDE DROP MANHOLES SHALL BE CONSTRUCTED AS INDICATED BY THE DRAWING. MANHOLE FLOORS SHALL HAVE SLOPES OF 3 INCHES PER FOOT IN THE AREAS OUTSIDE OF THE FLOW CHANNELS SLOPED TOWARD THE FLOW CHANNELS. PIPES LAID THROUGH MANHOLES SHALL HAVE THE TOP HALF REMOVED TO NEAT LINES FOR THE FULL INSIDE DIAMETER OF THE MANHOLE. MANHOLE FLOORS SHALL THEN BE SHAPED AROUND THE BOTTOM HALF OF THE PIPE WHICH FORMS THE FLOW CHANNEL.
14. PIPES INSTALLED WITHIN THE EXCAVATION MADE FOR THE MANHOLE SHALL BE CRADLED WITH CONCRETE TO THE LIMITS OF THE MANHOLE EXCAVATION. WHEN CLAY PIPE IS USED, THE CRADLE SHALL EXTEND TO THE FIRST JOINT OUTSIDE THE MANHOLE. THE CRADLE SHALL BE TERMINATED AT THE CLAY PIPE JOINT IN A MANNER WHICH WILL MAINTAIN THE FLEXIBILITY OF THE JOINT. COST OF CRADLE WITHIN MANHOLE EXCAVATION OR TO CLAY PIPE JOINTS ADJACENT TO MANHOLE SHALL BE INCLUDED IN THE UNIT PRICE BID FOR THE MANHOLE.
15. MANHOLE COVER CASTINGS AND MANHOLE FRAME CASTINGS SHALL CONFORM TO THE REQUIREMENTS AS INDICATED IN THE STANDARD SPECIFICATIONS AND AS SHOWN IN THE STANDARD DETAIL DRAWING.
16. THE VERTICAL DROP IN INSIDE DROP MANHOLES SHALL NOT EXCEED 2' FOR INFLOWING PIPES SIZED 12" OR SMALLER AND 2' FOR INFLOWING PIPES LARGER THAN 12". THE CROWNS OF INFLOWING PIPES SHALL NEVER BE SET LOWER THAN THE CROWN OF THE OUTFLOWING PIPE.
17. STANDARD MANHOLES AND STANDARD INSIDE DROP MANHOLES SHALL BE BID AS STANDARD MANHOLES FOR THE TYPE AND DIAMETER INDICATED. OUTSIDE DROP MANHOLES SHALL BE BID AS STANDARD OUTSIDE DROP MANHOLES FOR THE TYPE AND DIAMETER INDICATED. ALL MANHOLE DIAMETERS WILL BE 4' UNLESS INDICATED OTHERWISE.
18. A BRICK MASONRY COLLAR SHALL BE INSTALLED BETWEEN THE CAST IRON FRAME AND THE CONCENTRIC CONE. THE COLLAR WILL HAVE 8" WALLS AND A VERTICAL HEIGHT OF 6" MINIMUM AND 18" MAXIMUM. A 1" COAT OF MORTAR WILL BE PLASTERED ON THE OUTSIDE OF THE COLLAR. THE USE OF PRE-CAST CONCRETE SPACERS FOR MANHOLE TOP ADJUSTMENT IS ALSO ALLOWED.

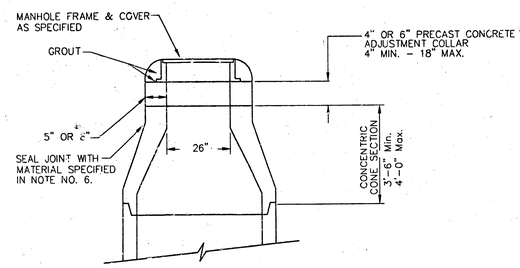

ALTERNATE CONSTRUCTION IN UNPAVED AREAS

CITY OF WICHITA
STD. MANHOLE DETAILS
SEWER APPURTENANCES

BAUGHMAN COMPANY P.A.
ENGINEERING, SURVEYING, & PLANNING
316-262-7271 • 315 ELLIS • WICHITA, KANSAS 67211

PROJECT NUMBER 468-76-245-82272-000-000-001

SHEET 2 OF 5

DESIGN	DRAWN	APPROVED	DATE	SCALE
STAFF	STAFF			NONE

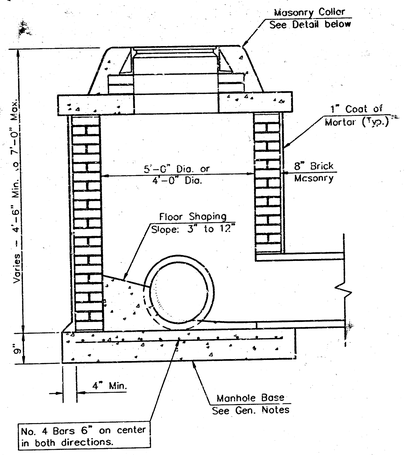

SHALLOW TYPE "A" MANHOLE

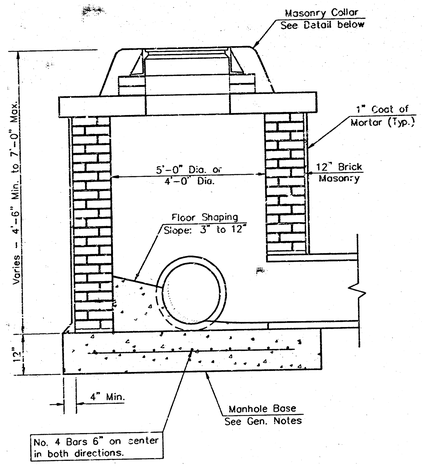

SHALLOW TYPE "B" MANHOLE

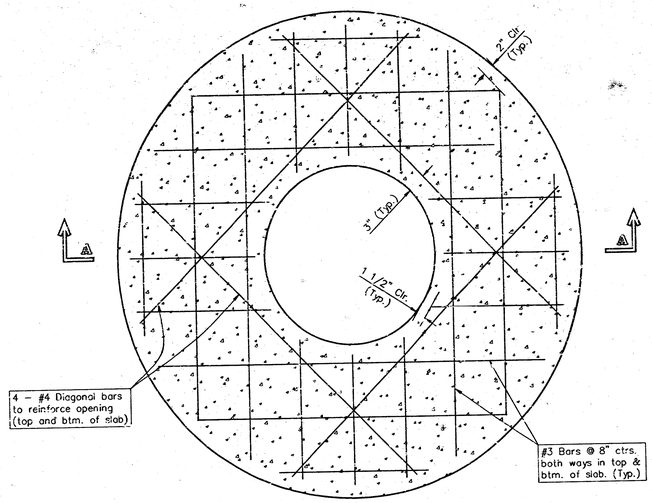

PLAN

GENERAL NOTES

1. Mortar used in masonry construction shall contain 8 sacks of cement per cubic yard. Concrete used in manhole bases shall conform to the requirements of concrete for concrete pavement construction as specified in the city standard paving specifications using city concrete cement mix without air entraining admixture. Mortar shall be placed around the manhole ring as shown on the drawings when manholes are constructed in unpaved areas. Type "A" shallow manholes can be used on sewers when the manhole is not located within public street pavement. Manholes constructed where pipe sizes are smaller than 24" shall have an inside diameter of 4'. Manholes constructed where pipe sizes are 24" or larger shall have an inside diameter of 5'. Completed manhole shall be without leaks and water tight.

2. Reinforcing steel shall be installed in the manhole bases and shall consist of no. 4 bars placed on 6" centers in both directions. The manhole base reinforcement shall be placed 6" above the bottom of the manhole base. All costs for furnishing and installing reinforcing steel shall be included in the unit price bid for the manhole.

3. The floors of all manholes shall be shaped with flow channels such that the manholes will be self cleaning and free of areas where solids could be deposited as sewage flows through the manhole from all inlet pipes to the outlet pipe. Flow channels shall be formed to match the bottom halves of the inflowing pipes and the outflowing pipe as shown by the drawings. Manhole floors shall have slopes of 3 inches per foot in the areas outside of the flow channels sloped toward the flow channels. Pipes laid through manholes shall have the top half removed to neat lines for the full inside diameter of the manhole. Manhole floors shall then be shaped around the bottom half of the pipe which forms the flow channel.

4. Pipes installed within the excavation made for the manhole shall be cradled with concrete to the limits of the manhole excavation. When clay pipe is used, the cradle shall extend to the first joint outside the manhole. The cradle shall be terminated at the clay pipe joint in a manner which will maintain the flexibility of the joint. Cost of cradle within manhole excavation or to clay pipe joints adjacent to manhole shall be included in the unit price bid for the manhole.

5. Manhole cover castings and manhole frame castings shall conform to the requirements as indicated in the standard specifications and as shown in the standard detail drawings.

6. The crowns of inflowing pipes shall never be set lower than the crown of the outflowing pipe.

7. Standard shallow manholes type "A" and "B" shall be paid for at the unit price bid per each for the type and diameter indicated. Standard special shallow manholes type "A" and "B" shall be paid for at the unit price bid per each for the type indicated. All standard shallow manhole diameters will be 4' unless indicated otherwise.

8. All brick used in manhole construction shall meet Grade SW of ASTM C652 or C62-87.

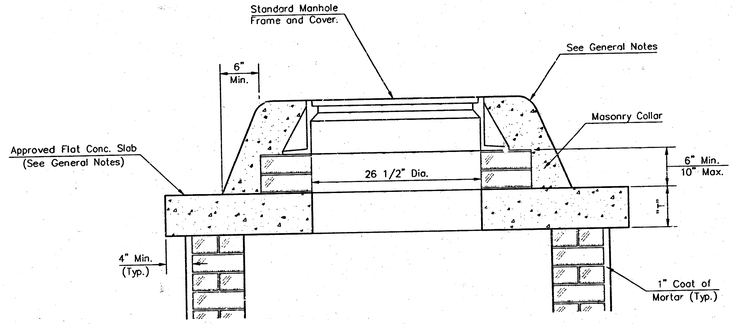

MASONRY COLLAR DETAIL

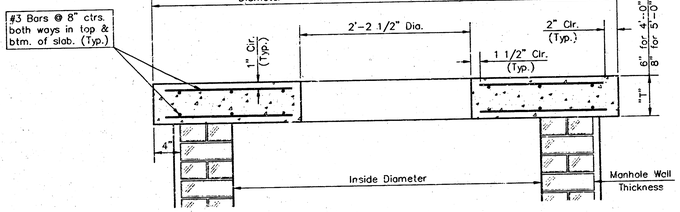

SECTION A-A

FLAT CONCRETE SLAB DETAILS

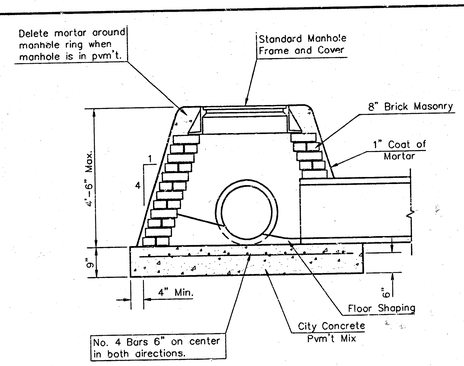

SPECIAL SHALLOW TYPE "A" MANHOLE

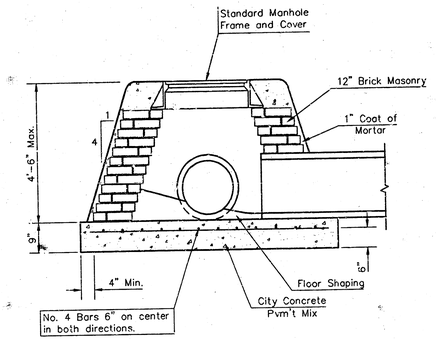

SPECIAL SHALLOW TYPE "B" MANHOLE

CITY OF WICHITA, KANSAS

Std. Shallow MH Detail

TYPE "A" AND TYPE "B"

BAUGHMAN COMPANY P.A.
ENGINEERING, SURVEYING, & PLANNING
316-262-7271 • 315 ELLIS • WICHITA, KANSAS 67211

PROJECT NUMBER	SHEET
488-78-245-82272-000-000-001	3 OF 5

DESIGN	DRAWN	APPROVED	DATE	SCALE
C.O.W.	Staff			NONE

Detail Sheet

BENCHMARKS:

City Disc 34' E. ℄ Arkansas & 2' S. of S. line 37th Street.
Elev. = 132.09 City Datum

T.B.M. RR Spike in E. side P.P., 81' N C 37th Street and 19.5' W. ℄ of Armstrong.
Elev. = 132.98 City Datum

City Disc at top wingwall on S.E. Corner of Bridge over The Big Ditch at 37th Street.
Elev. = 144.74 City Datum

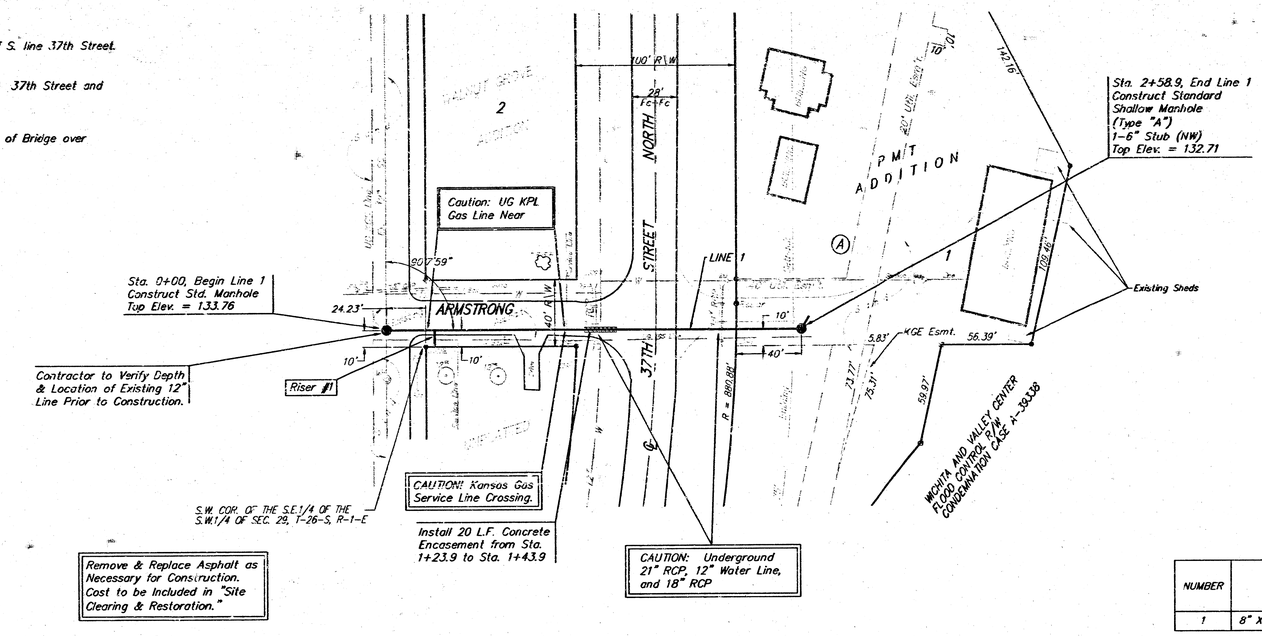

SCALE:
1" = 40' Horiz.
1" = 5' Vert.
• = Iron

PMT ADDITION

SEWER SERVICE TABLE

NUMBER	TYPE	LOCATION			STATION/ DIRECTION	FOR INFORMATION ONLY APPROXIMATE LENGTH 4" PIPE	
		LOT NO.	BLOCK NO.	LINE NO.		VERTICAL	HORIZONTAL
1	8" X 4" Tee Saddle			1	29+52/Rt.	4'	10'

NOTE: Vertical Riser Pipe shall be extended to 2' minimum above ground water elevation and 4' maximum below proposed ground elevation.

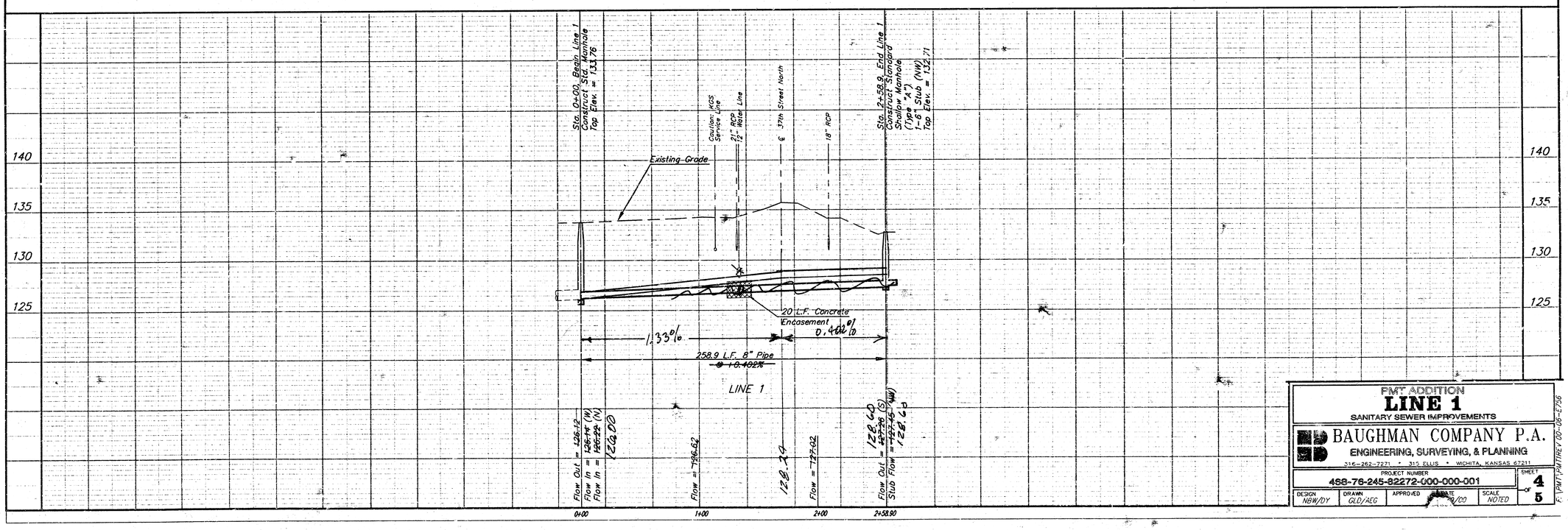

PMT ADDITION
LINE 1
SANITARY SEWER IMPROVEMENTS

BAUGHMAN COMPANY P.A.
ENGINEERING, SURVEYING, & PLANNING
316-262-7271 • 315 ELLIS • WICHITA, KANSAS 67211

PROJECT NUMBER	SHEET
468-76-245-82272-000-000-001	4 OF 5

DESIGN	DRAWN	APPROVED	DATE	SCALE
NBW/DY	GLD/AEG		[illegible]/00	NOTED

F:\PMT\PMTREV 00-06-E756

PMT ADDITION

WICHITA, SEDGWICK COUNTY, KANSAS

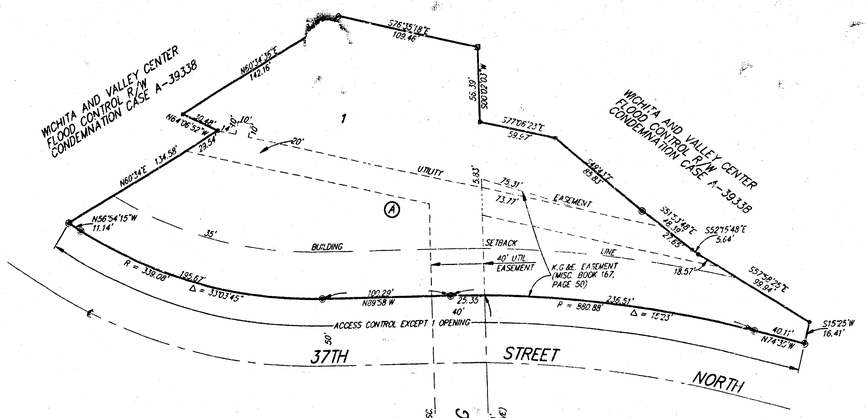

NOTE: BLANKET EASEMENT TO PHILLIPS PETROLEUM COMPANY FOR POLE LINES AT MISC. BOOK 185, PAGE 411.

State of Kansas) SS
Sedgwick County)

We, Baughman Company, P.A., Surveyors in aforesaid county and state do hereby certify that we have surveyed and platted "PMT ADDITION", Wichita, Sedgwick County, Kansas and that the accompanying plat is a true and correct exhibit of the property surveyed, being a tract in the S.E.1/4 of the S.W.1/4 of Sec. 29, Twp. 26, R-1-E of the 6th P.M., Sedgwick County, Kansas, described as follows: beginning at a point on the west line of the S.E.1/4 of the S.W.1/4, 194.44 feet north of the S.W. corner of the S.E.1/4 of the S.W.1/4, said point being on the north line of right-of-way of Highway 610-25-26, being present 37th Street North; thence continuing north along the west line of the S.E.1/4 of the S.W.1/4 to the south line of right-of-way of Wichita-Valley Center Flood Control; thence southeasterly along the south line of said right-of-way to its intersection with the north line of Highway 610-25-26; thence south and west along said Highway right-of-way to point of beginning, together with part of Walnut Grove, Sedgwick County, Kansas, being that part of Lot 1, lying south and east of the Wichita-Valley Center Flood Control R/W and that part of Lot 2 lying north of Highway R/W 610-25-26, being present 37th Street North and lying east of Wichita Valley Center Flood Control R/W and Armstrong Avenue lying east of and adjacent to said Lot 2, and County Road lying between said Lots 1 and 2, all in said Walnut Grove Addition.

All being situated in the SW1/4 of Sec. 29, Twp. 26-S, R-1-E of the 6th P.M., Sedgwick County, Kansas.

Existing public easements and dedications being vacated by virtue of KSA 12-512(b).

Baughman Company, P.A.

Date 12-31-92

Gregory F. Severns Surveyor

GREGORY F. SEVERNS REGISTERED LS-876 KANSAS LAND SURVEYOR

Know all men by these presents that we, the undersigned, have caused the land described in the surveyors certificate to be platted into a lot to be known as "PMT ADDITION", Wichita, Sedgwick County, Kansas. The utility easements are hereby granted as indicated for the construction and maintenance of all public utilities. Access controls as depicted on the face of the plat are granted to the City of Wichita, Kansas. The permitted entrance locations shall be as determined by the City Engineer of the City of Wichita, Kansas.

PMT Properties, Inc.

20.00 ck

Larry G. Widmer President
Larry G. Widmer

D-927

We, the undersigned, holders of a mortgage on a portion of the above described property do hereby consent to this plat of "PMT ADDITION", Wichita, Sedgwick County, Kansas.

Professional Machine and Tool, Inc.

Larry G. Widmer Treasurer
Larry G. Widmer (Title)

Fred and Mary, Inc.

Fred R. Nibarger PRESIDENT
Fred R. Nibarger (Title)

State of Kansas) SS
Sedgwick County)

The foregoing instrument acknowledged before me, this 4 day of January, 1993, by Larry G. Widmer Treas of Professional Machine and Tool, Inc., on behalf of the corporation, and by Fred Nibarger Pres of Fred and Mary, Inc., on behalf of the corporation.

Janice S. Alderson Notary Public #1273806
Janice S. Alderson

My App't. Exp. 12/15/94

JANICE S. ALDERSON NOTARY PUBLIC STATE OF KANSAS My Appt Exp. 12/15/94

State of Kansas) SS
Sedgwick County)

The foregoing instrument acknowledged before me, this 31st day of December, 1992 by Larry G. Widmer, President of PMT Properties, Inc., on behalf of the corporation.

Mildred E. Franz Notary Public
Mildred E. Franz

My App't. Exp. 2-3-95

This plat of "PMT ADDITION", Wichita, Sedgwick County, Kansas, has been submitted to and approved by the Wichita-Sedgwick County Metropolitan Area Planning Commission, Wichita, Kansas.

Dated this 19th day of November, 1992 Wichita-Sedgwick County Metropolitan Area Planning Commission.

L. O. Breckenridge, Jr. Chairman

Marvin S. Krout Secretary

WICHITA-SEDGWICK COUNTY METROPOLITAN AREA PLANNING COMMISSION SEAL KANSAS

This plat approved and all dedications shown hereon accepted by the City Council of the City of Wichita, Kansas, this 23rd day of February, 1993.

Frank M. Ollie Mayor

Pat Burnett Deputy City Clerk
Pat Burnett

Entered on transfer record this 3rd day of March, 1993.

Susan E. Crockett-Spoon County Clerk
Susan E. Crockett-Spoon

State of Kansas) SS
Sedgwick County)

This is to certify that this plat has been filed for record in the office of the Register of Deeds, this 8TH day of MARCH 1993, at 4:30 o'clock PM; and is duly recorded.

Pat Kettler Register of Deeds
Pat Kettler

Ed Rosa Deputy
Ed Rosa

CLERK OF SEDGWICK COUNTY KANSAS

18-8-1-11

PC 35-4

5/5.