LATERAL 138, MAIN 4, SANITARY SEWER NO. 23

PROJ. NO. 468-83048

OCA NO. 743819

CITY OF WICHITA, KANSAS

M. E. LINDEBAK, P.E. - CITY ENGINEER

GENERAL NOTES:

1. ALL CONSTRUCTION AND MATERIAL TO COMPLY WITH CITY OF WICHITA SPECIFICATIONS AND STANDARDS.
2. THE CONTRACTOR SHALL NOTIFY THE UTILITY SERVICE COMPANIES TO FLAG THEIR UNDERGROUND LINES AND REQUEST ANY OVERHEAD POLE/LINE ADJUSTMENTS 48 HOURS PRIOR TO CONSTRUCTION.

   KANSAS ONE-CALL 1-800-344-7233
3. THE UNDERGROUND UTILITY SERVICE LINES AND OVERHEAD UTILITY POLE LINES ARE TO BE ADJUSTED AS NECESSARY BY OTHERS PRIOR TO CONSTRUCTION UNLESS THE PLANS SPECIFICALLY CALL FOR THEIR ADJUSTMENT BY THE CONTRACTOR. EXISTING UTILITIES AND THEIR LOCATION, AS SHOWN ON THE PLANS, REPRESENT THE BEST INFORMATION OBTAINABLE FOR DESIGN. LOCATION INFORMATION HAS BEEN OBTAINED FROM THE VARIOUS UTILITY COMPANIES AND IS EITHER FROM COMPANY RECORD DRAWINGS OR COMPANY PROVIDED FIELD LOCATIONS. THE CONTRACTOR WILL BE REQUIRED TO WORK AROUND EXISTING UTILITIES WITHIN THE RIGHT-OF-WAY WHICH DO NOT CONFLICT WITH PROPOSED CONSTRUCTION.
4. THE CONTRACTOR SHALL GIVE ALL PROPERTY OWNERS AND/OR TENANTS DIRECTLY AFFECTED BY THE CONSTRUCTION OF THIS PROJECT A MINIMUM OF FIVE (5) DAYS ADVANCE WRITTEN NOTICE PRIOR TO START OF CONSTRUCTION.
5. ANY TREE OR SHRUB REMOVAL MUST BE APPROVED BY THE FIELD ENGINEER.
6. THE CONTRACTOR SHOULD EXAMINE THE CONSTRUCTION SITE PRIOR TO BIDDING AND BE SATIISFIED AS TO THE WORK SHOWN FOR COMPLETION.
7. ANY FENCE REMOVED DURING CONSTRUCTION MUST BE REPLACED AND RESTORED TO ORIGINAL CONDITION.
8. UTILITY EASEMENT AND FENCE RESTORATION SHALL BE SUSPENDED FOR THREE WEEKS FROM THE DATE THE SEWER IS TESTED AND ACCEPTED BY THE ENGINEERING DIVISION, DEPARTMENT OF PUBLIC WORKS, TO ALLOW PROPERTY OWNERS TIME TO INSTALL HOOKUPS TO THE SEWER MAIN. CONTRACTORS SHALL NOTIFY PROPERTY OWNERS, IN WRITING, OF THIS AGGREMENT.

INDEX OF SHEETS

SHEET 1 - TITLE SHEET
SHEET 2 - PLAN/PROFILE
SHEET 3 - MANHOLE DETAIL

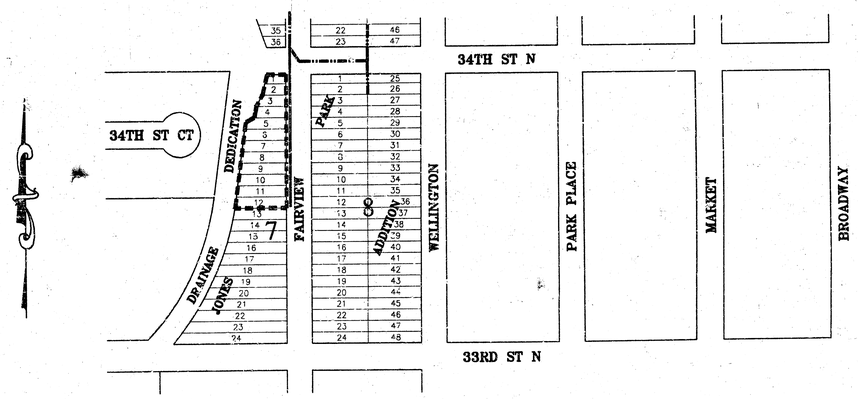

IMPROVEMENT DISTRICT
EXISTING SANITARY SEWER
PROPOSED SANITARY SEWER

Booked
P-176
7-17-01
R. Loomis
AS BUILT

JULIANNE L. KALLMAN
LICENSED
14656
KANSAS
PROFESSIONAL ENGINEER
11-3-00

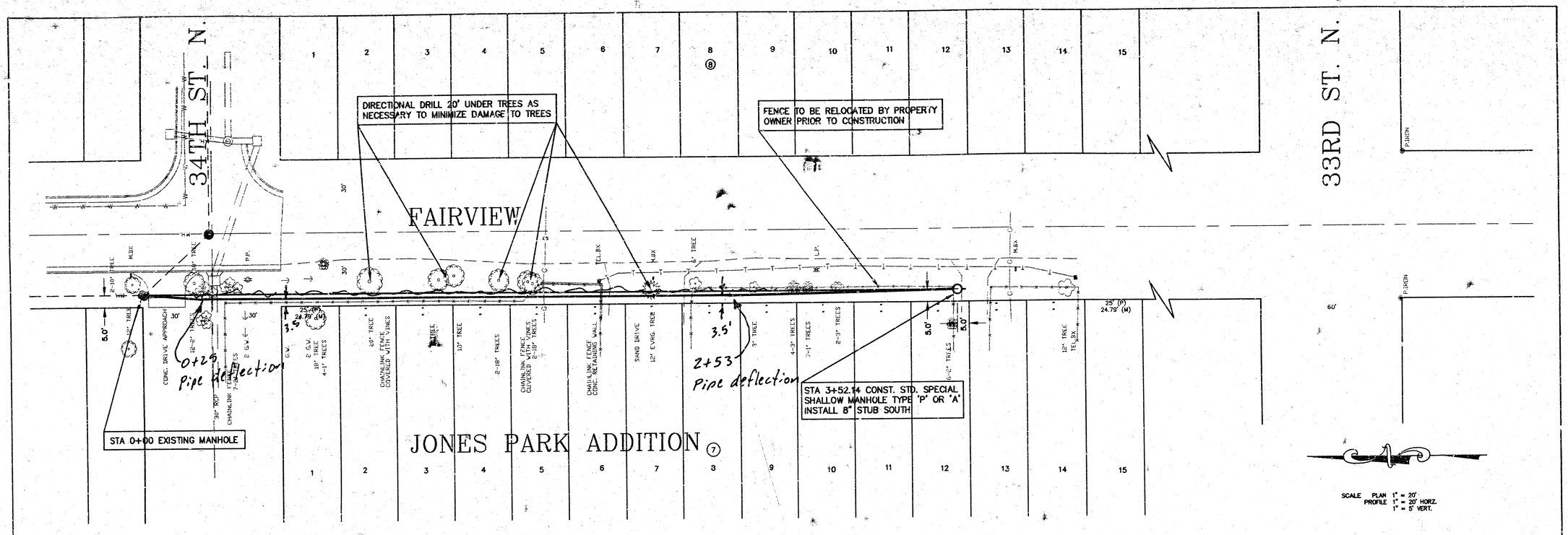

SCALE PLAN 1" = 20'
PROFILE 1" = 20' HORZ.
1" = 5' VERT.

BM. "D" NE CORNER TOP OF INLET AT NW CORNER OF FAIRVIEW AND 33RD ST. N.
ELEV. = 128.38

BM. "C" SE CORNER TOP OF INLET AT NE CORNER OF FAIRVIEW AND 34TH ST. N.
ELEV. = 127.82

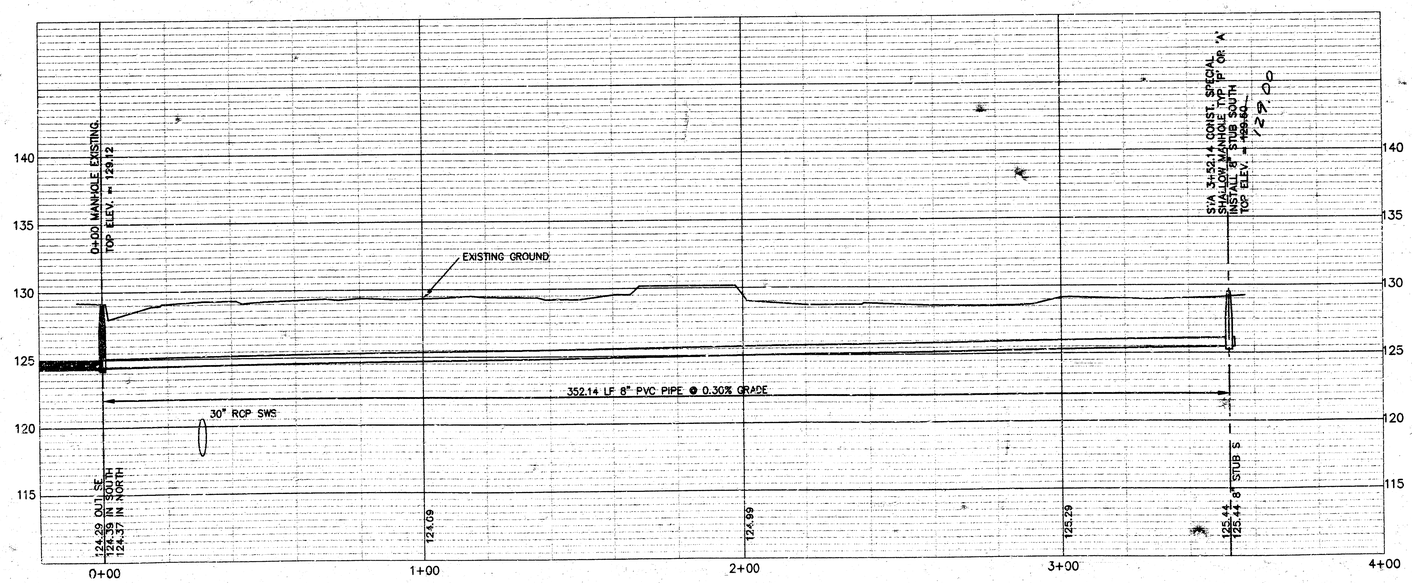

THE CITY OF WICHITA

CITY ENGINEER'S OFFICE
CITY HALL - SEVENTH FLOOR
455 NORTH MAIN STREET
WICHITA, KANSAS 67202
(316) 268-4501
(316) 268-4114 FAX

LATERAL 138, MAIN 4
SANITARY SEWER # 23

M. E. LINDEBAK P.E. - CITY ENGINEER

ENGINEER: J. KALLMAN	DRAWN BY: R. LOOMIS
PROJECT NUMBER 468-83048	OCA NO. 743819
DATE NOV. 2000	SHEET 2 OF 3

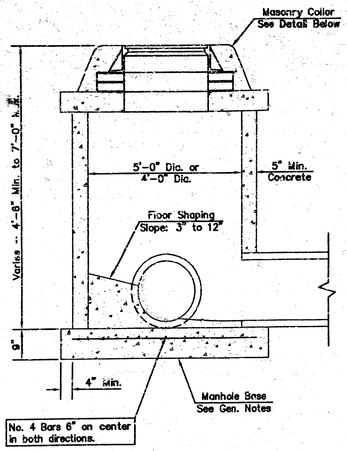

SHALLOW TYPE "P" MANHOLE

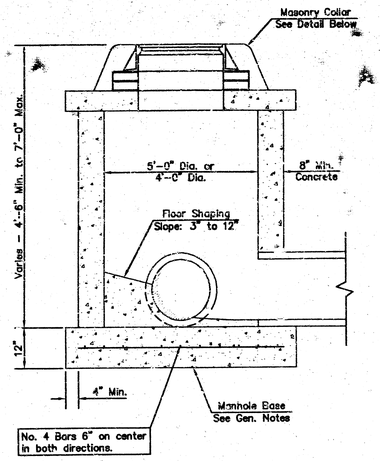

SHALLOW TYPE "C" MANHOLE

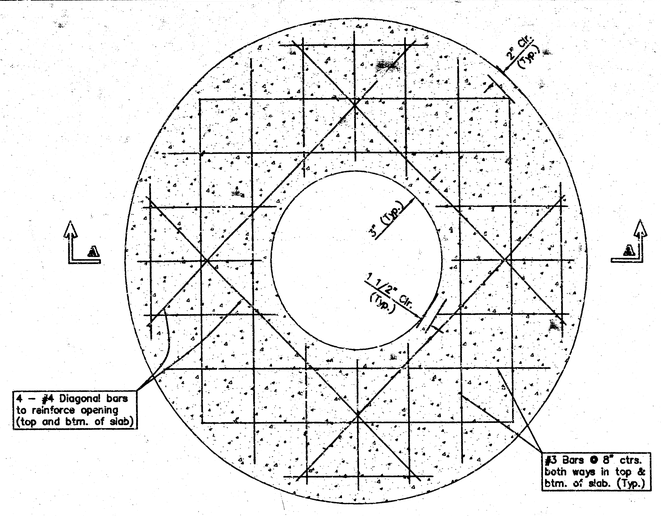

PLAN

GENERAL NOTES

1. Mortar used in masonry construction shall contain 8 sacks of cement per cubic yard. Concrete used in manhole bases shall conform to the requirements of concrete for concrete pavement construction as specified in the city standard paving specifications using city concrete cement mix without air entraining admixture. Mortar shall be placed around the manhole ring as shown on the drawings when manholes are constructed in unpaved areas. Manholes constructed where pipe sizes are smaller than 24" shall have an inside diameter of 4'. Manholes constructed where pipe sizes are 24" or larger shall have an inside diameter of 5'. Completed manhole shall be without leaks and water tight.
2. Reinforcing steel shall be installed in the manhole bases and shall consist of no. 4 bars placed on 6" centers in both directions. The manhole base reinforcement shall be placed 6" above the bottom of the manhole base. All costs for furnishing and installing reinforcing steel shall be included in the unit price bid for the manhole.
3. The floors of all manholes shall be shaped with flow channels such that the manholes will be self cleaning and free of areas where solids could be deposited as sewage flows through the manhole from all inlet pipes to the outlet pipe. Flow channels shall be formed to match the bottom halves of the inflowing pipes and the outflowing pipe as shown by the drawings. Manhole floors shall have slopes of 3 inches per foot in the areas outside of the flow channels sloped toward the flow channels. Pipes laid through manholes shall have the top half removed to neat lines for the full inside diameter of the manhole. Manhole floors shall then be shaped around the bottom half of the pipe which forms the flow channel.
4. Pipes installed within the excavation made for the manhole shall be cradled with concrete to the limits of the manhole excavation. When clay pipe is used, the cradle shall extend to the first joint outside the manhole. The cradle shall be terminated at the clay pipe joint in a manner which will maintain the flexibility of the joint. Cost of cradle within manhole excavation or to clay pipe joints adjacent to manhole shall be included in the unit price bid for the manhole.
5. Manhole cover castings and manhole frame castings shall conform to the requirements as indicated in the standard specifications and as shown in the standard detail drawings.
6. The crowns of inflowing pipes shall never be set lower than the crown of the outflowing pipe.
7. Standard shallow manholes type "P" and "C" shall be paid for at the unit price bid per each for the type and diameter indicated. All standard shallow manhole diameters will be 4' unless indicated otherwise.
8. All brick used in manhole construction shall meet Grade SW of ASTM C652 or C62-87.

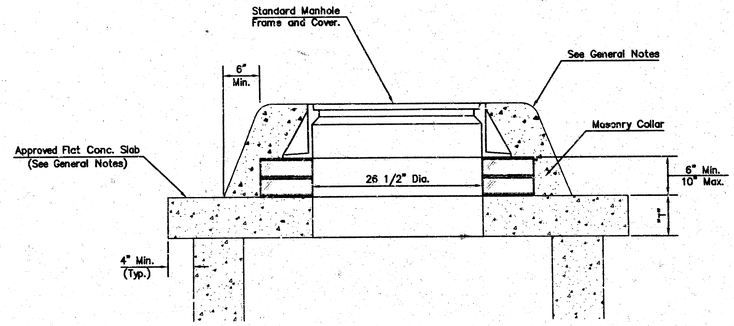

MASONRY COLLAR DETAIL

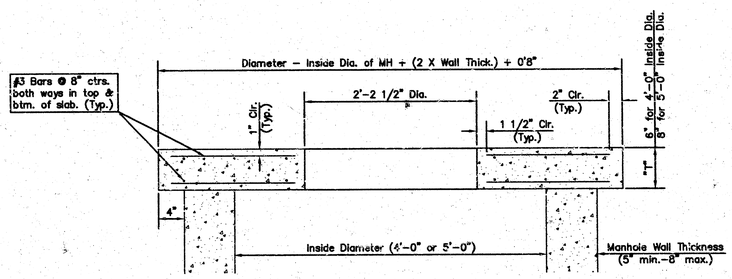

SECTION A-A

FLAT CONCRETE SLAB DETAILS

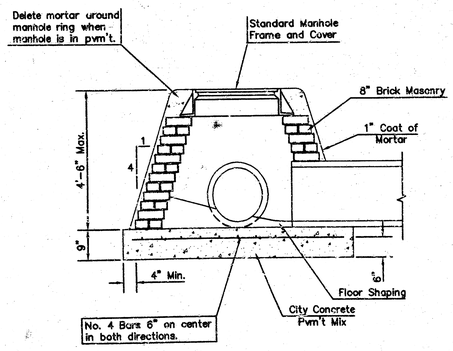

SPECIAL SHALLOW TYPE "A" MANHOLE

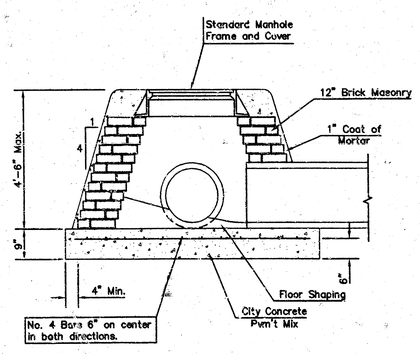

SPECIAL SHALLOW TYPE "B" MANHOLE

THE CITY OF WICHITA

CITY ENGINEER'S OFFICE
CITY HALL - SEVENTH FLOOR
455 NORTH MAIN STREET
WICHITA, KANSAS 67202
(316) 268-4601
(316) 268-4116 FAX

SHALLOW MANHOLES
TYPE 'P' & 'C'

M. E. LINDEBAK P.E. - CITY ENGINEER

PROJECT NUMBER	OCA NO.
468-83048	743819
DATE: MAR 96	SHEET 3 OF 3

SHLWMH2.DWG

03-50-40-AF