A. Riggs IR-45
D. Cramer

General Note: Contractor shall install a wet well mounted lift station, lift station to be furnished by others, as shown by plans. Lump sum bid price for installation of lift station shall include all costs for material and labor to complete the work in place including wet well manhole, 8" clay pipe stubs in wet well, electrical wiring, concrete walk, electrical conduit, electrical fused disconnect switch, power service pole, guy wire, sand backfill, flushing, compacted earth backfill, suction lines, cast iron discharge line to beginning of P.V.C. force main, thrust blocking, and any other necessary labor or material to complete the installation ready for operation. Four inch P.V.C. force main to be paid for at the price bid per lineal foot and such price shall include all costs for material and labor to complete the item including all earth and sand backfill, flushing, fittings, thrust blocking, connection of force main to outfall manhole, and any other incidental material or labor to complete the work.

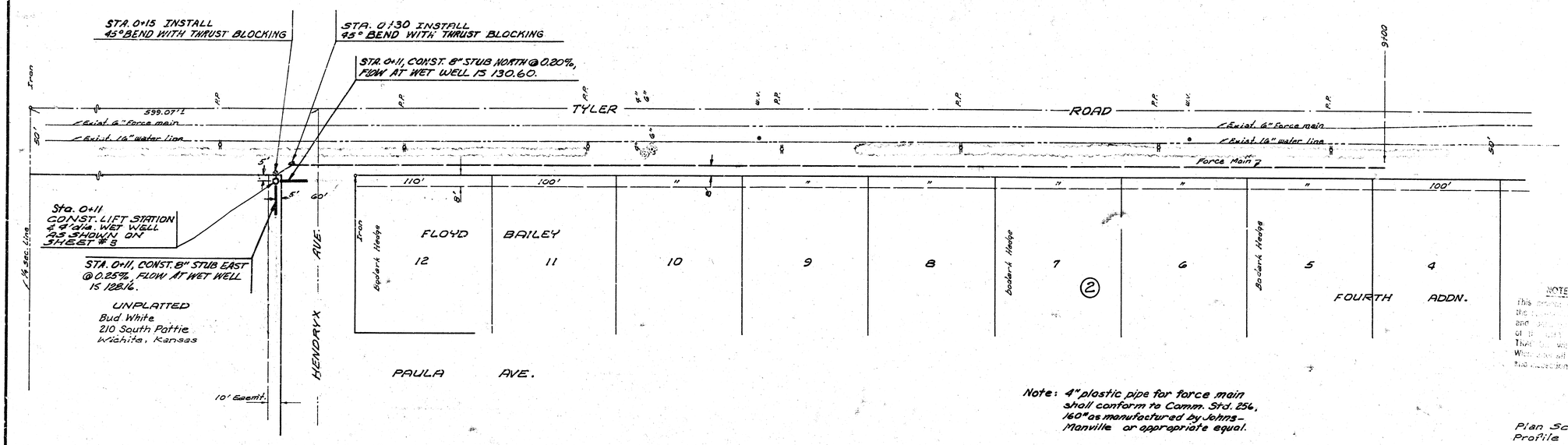

Note: 4" plastic pipe for force main shall conform to Comm. Std. 256, 160# as manufactured by Johns-Manville or appropriate equal.

Plan Scale 1" = 40'
Profile Scale 1" = 40' Hor.
1" = 4' Vert.

B.M. 143.53 "Std." 34.2' E. & 27.2' S. of ℄ Both Tyler & Maple
B.M. 144.44 N.W. Cor. Conc. Base Texaco Sign S.E. Cor. Tyler & Maple
B.M. 143.20 R.R. Spike S.E. Side P.P. N.W. Cor. Tyler & Bellview

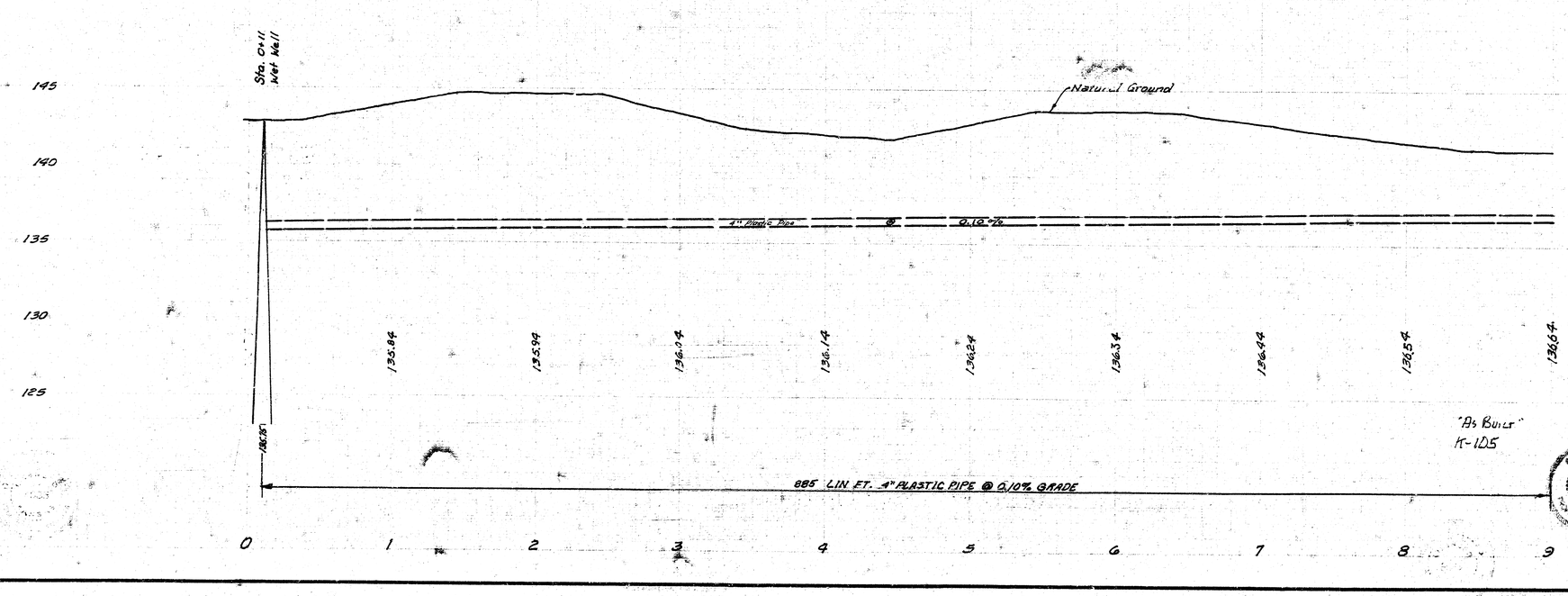

"As Built"
K-105

NOTE TO CONTRACTOR
This project will be constructed under the [illegible] CITY ENGINEER and [illegible] SPECIFICATIONS of [illegible] WICHITA. The CONTRACTOR will reimburse the City of Wichita for all cost of Engineering, Plans, and Inspection.

JUNE 10, 1968
R. W. LINN, CITY ENGINEER

LIFT STATION & FORCE MAIN IN CONNECTION WITH LAT. 7, SOUTHWEST MAIN
CITY OF WICHITA, KANSAS
R. W. LINN, CITY ENGINEER
PROJECT NO. AAKB 582015
DATE: AUG. 1972

1/5

FILMED FROM THE BEST AVAILABLE COPY

R-95

N

STA. 17+60 EXIST. M.H., END 4" PLASTIC PIPE

344.9'

N.W. Cor. Sec. 28-27-1W

9100

P.P. 6" 6" W.V. P.P. P.P. 6" 4" 6" P.P. W.V. P.P.

Asphalt Mat

ROAD

Exist 8" V.C.P.

TYLER

50'

50'

Force Main 7

100' 100' 100.96' 110' 60' 130' 600'

8' 8'

Proposed Water line

Bodark Hedge

Iron

FLOYD BAILEY

4 3 2 1

(2) FOURTH ADDN.

AVE. UNIVERSITY

1

(1)

EXCEPTION

STA. 17+13 INSTALL 45° BEND WITH THRUST BLOCKING

NOTE TO CONTRACTOR

This project will be constructed under the supervision of the CITY ENGINEER and conforming to the SPECIFICATIONS of the CITY OF WICHITA. The CONTRACTOR will reimburse the City of Wichita for all cost of Engineering, Plans, and Inspection.

¼ Sec. Line

MAPLE ST.

PAULA AVE.

STA. 17+13 INSTALL 45° BEND WITH THRUST BLOCKING

Sta. 17+55.67 End 4" plastic pipe
Beg 6" Plastic Pipe. See Detail Sheet No. 3

Sta. 17+60 Exist. M.H. END 4" FORCE MAIN

See M.H. Detail on Sheet No. 3

145 140 135 130

Natural Ground

S. Rim = 142.48

4" Plastic Pipe @ 0.10% Gr.

136.64 136.74 136.84 136.94 137.04 137.14 137.24 137.34 137.44

136.64 Top of 18" S.S. water line
16" 4" P.V.C. 137.50
16" in 138.00
Exist. Pipe = 137.79

860 L.I.N. FT. 4" PLASTIC PIPE @ 0.10% GRADE

9 10 11 12 13 14 15 16 17 18

8/5

LIFT STATION & FORCE MAIN IN CONNECTION WITH LAT. 7, SOUTHWEST MAIN

FILMED FROM THE BEST AVAILABLE COPY

NOTE TO CONTRACTOR

This project will be constructed under the supervision of the CITY ENGINEER and conforming to the SPECIFICATIONS of the CITY OF WICHITA. The CONTRACTOR will reimburse the City of Wichita for all cost of Engineering, Plans, and Inspection.

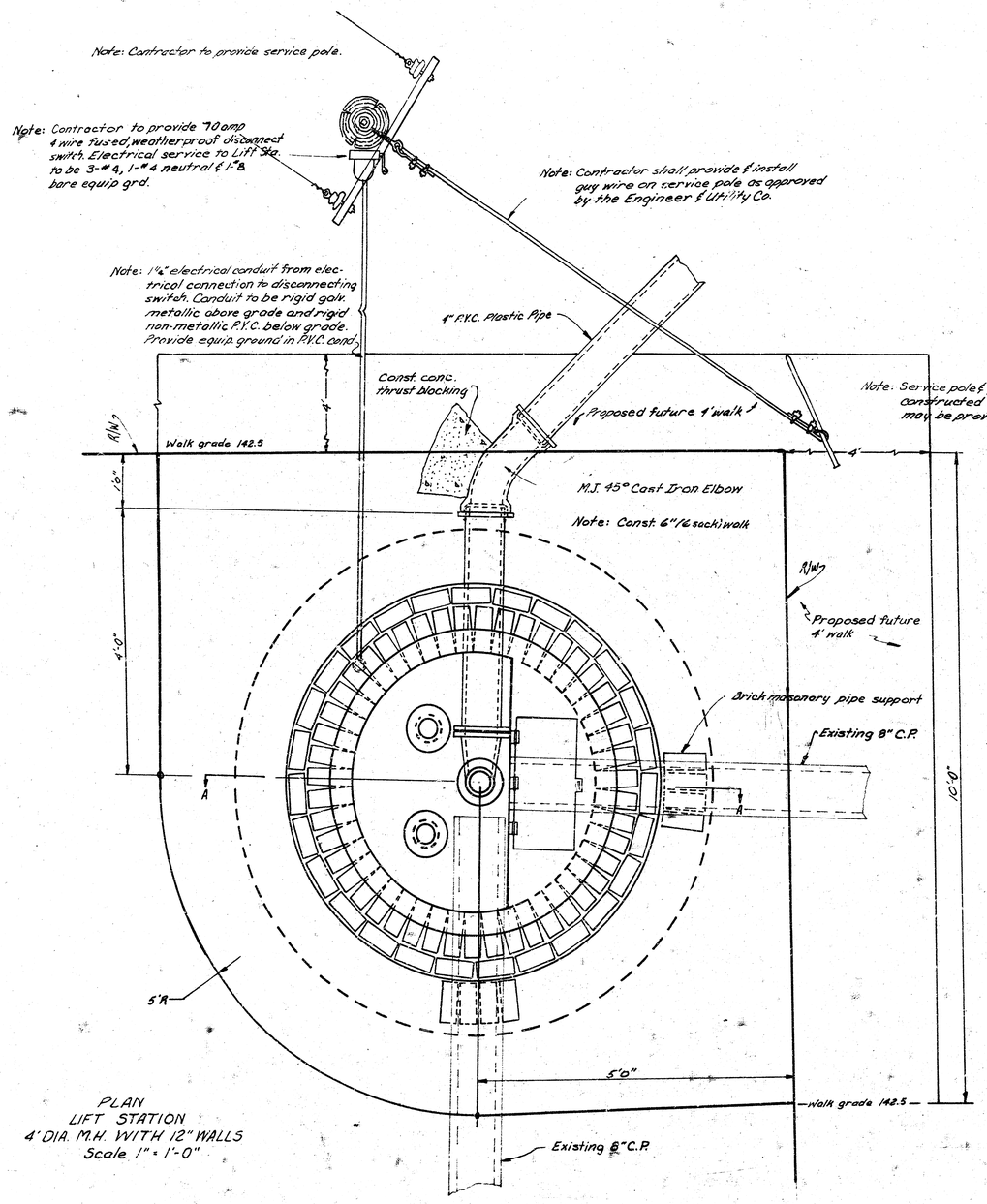

PLAN
LIFT STATION
4' DIA. M.H. WITH 12" WALLS
Scale 1" = 1'-0"

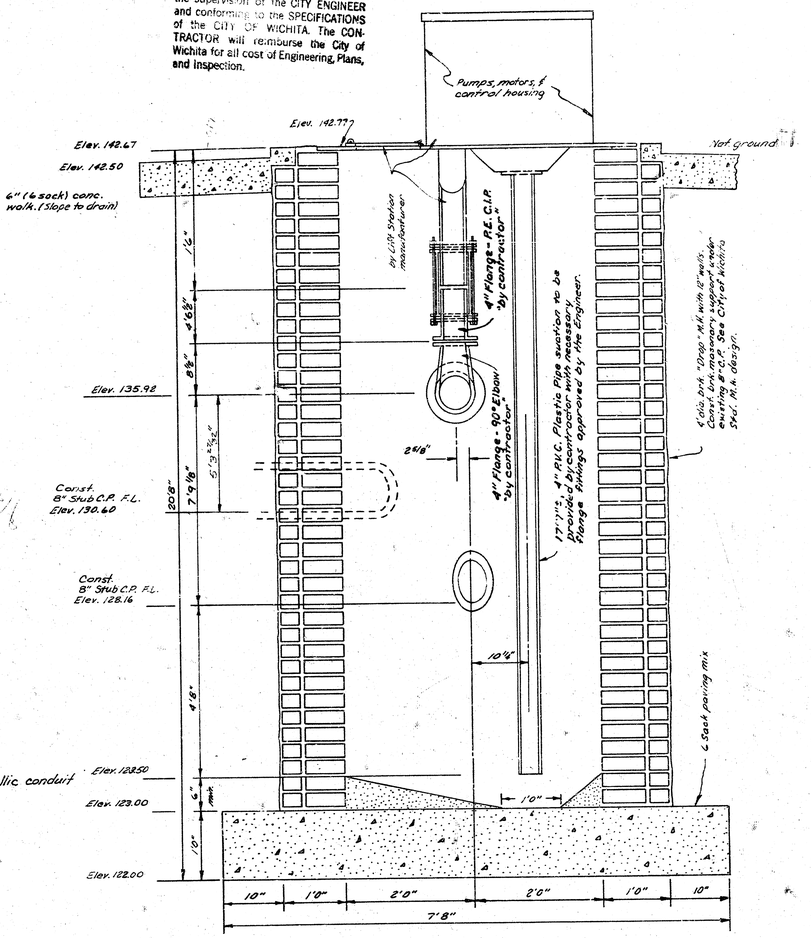

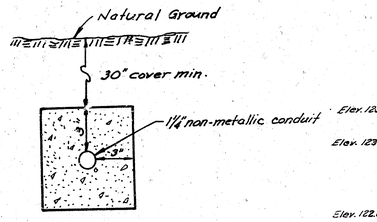

SECTION
ELECTRICAL CONDUIT
CONCRETE ENCASED
Scale 2" = 1'-0"

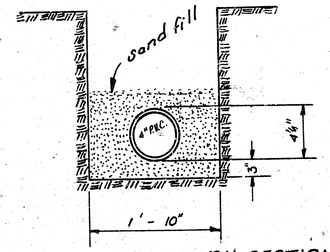

TYPICAL TRENCH SECTION

Section A-A

NOTE:
The M. J. 4" P.V.C. offset shall be included in the price bid of Lin. ft. of 4" P.V.C. plastic pipe

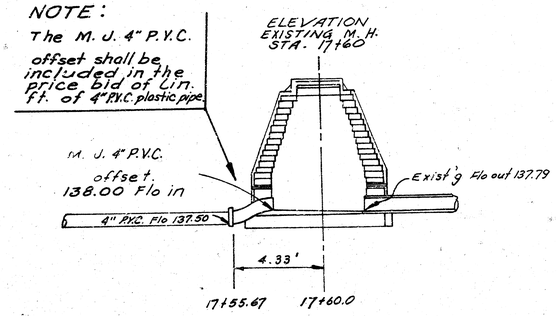

LIFT STATION in connection with
Lat. 7 S.W. Main
Date

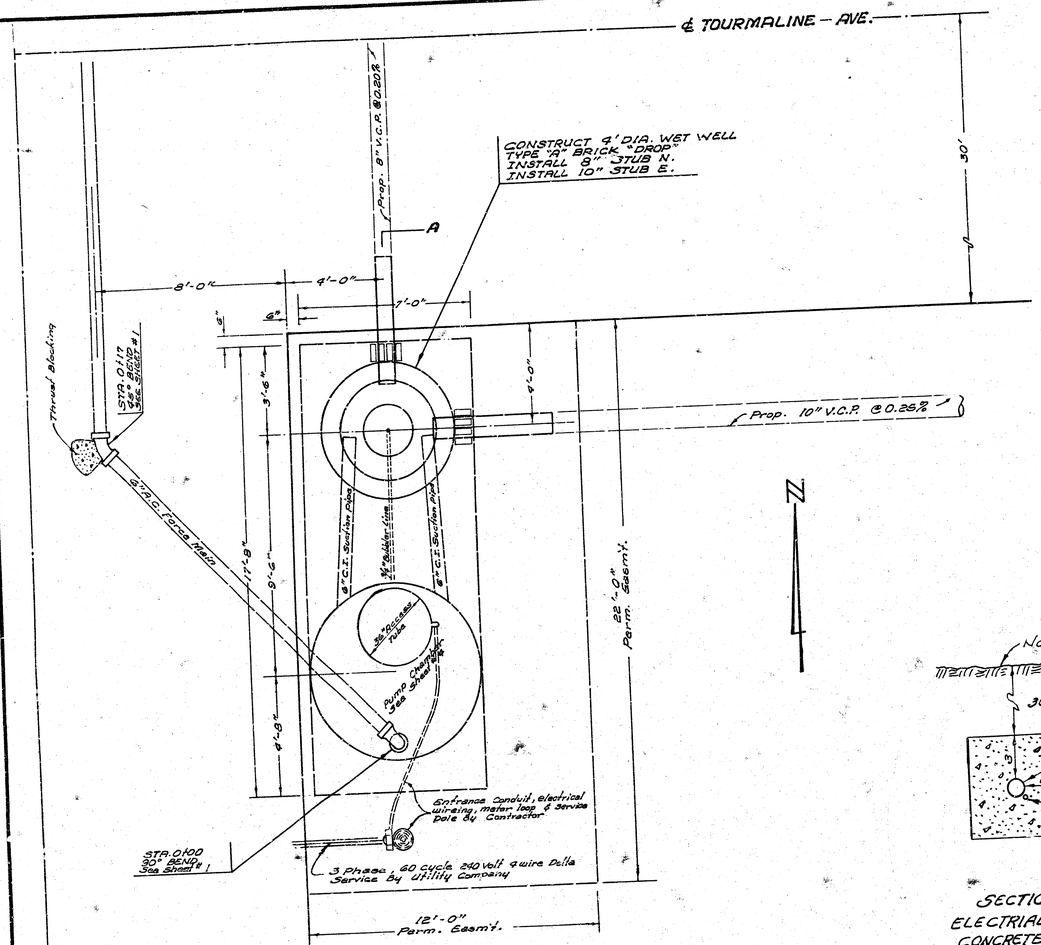

SETTING PLAN
Scale 3/8" = 1'-0"

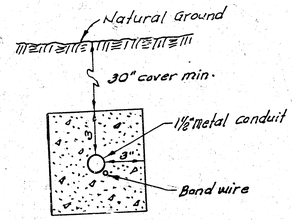

SECTION
ELECTRIAL CONDUIT
CONCRETE ENCASED
Scale 2"=1'-0"

NOTE:
6" C.I. pipe, 6" C.I. 90° Elbow and thrust blocking and mechanically tamped back fill are to be included in the bid price of Lift Station.

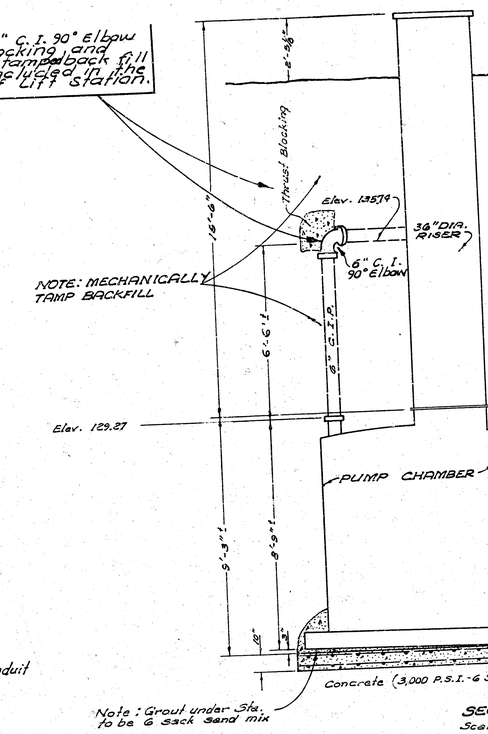

SECTION AA
Scale 3/8" = 1'-0"

GENERAL NOTES

#1 6" A.C. Elbows & thrust blocking shall be included in bid price of Lin. ft. of A.C. Pipe.

#2 Wet well conc. pad, conc. encasement of conduit, electrical wiring from Lift Sta. to service pole including Meter loop & service Pole shall be included in lump sum of bid of Lift Station.

#3 Electrical conduit shall have a 3" x 3" concrete encasement with a bond wire parallel to the conduit pipe as shown on Plan.

#4 Sand fill used for the 6" A.C. pipe shall be included in the bid price of Lin. ft. of 6" A.C. pipe.

#5 The 6" C.I. Suction pipes from Wet well to pump shall be included in the bid price of Lift. Station.

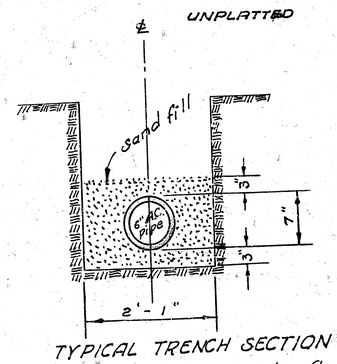

TYPICAL TRENCH SECTION
0.12 Ton of Sand per Lin. ft. (Approx.)

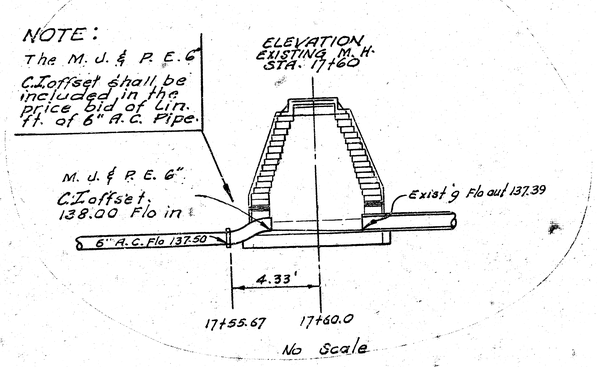

No Scale

NOTE TO CONTRACTOR

This project will be constructed under the supervision of the CITY ENGINEER and conforming to the SPECIFICATIONS of the CITY OF WICHITA. The CONTRACTOR will reimburse the City of Wichita for all cost of Engineering, Plans, and Inspection.

LIFT STATION & FORCE MAIN
IN CONNECTION WITH LAT. 7, SOUTHWEST MAIN
PRIVATE PROJECT

7 - Engr.
1 - Water.

FILMED FROM THE BEST AVAILABLE COPY

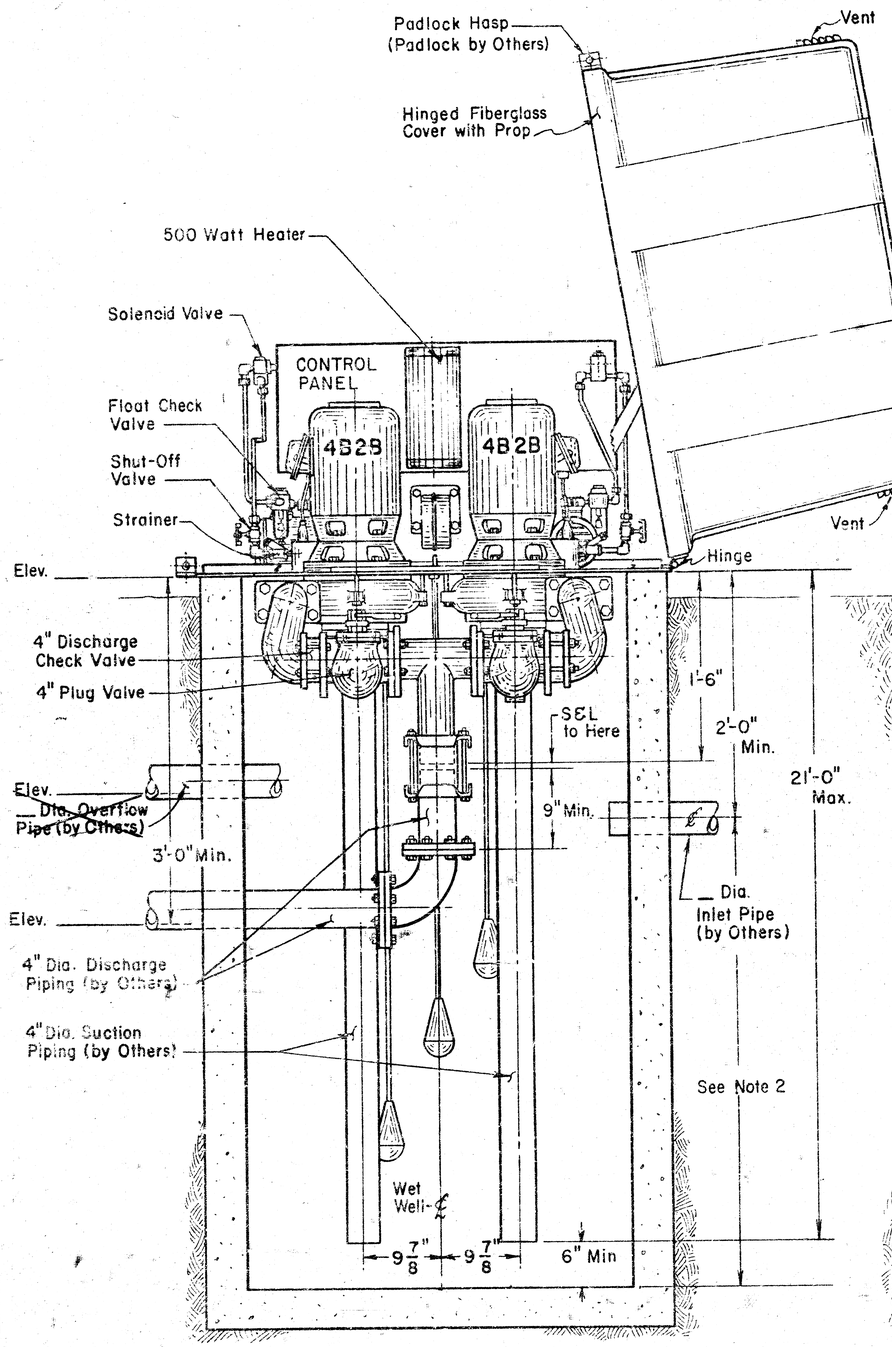

SECTIONAL ELEVATION

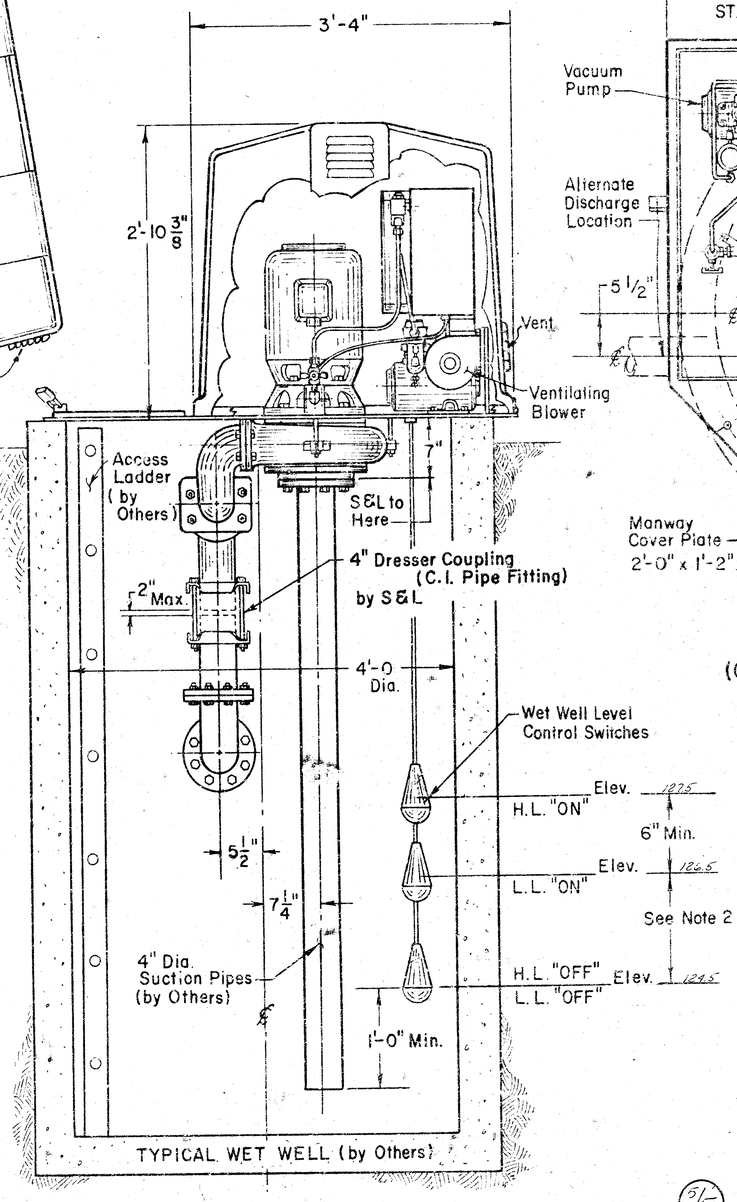

TYPICAL WET WELL (by Others)

CROSS SECTION

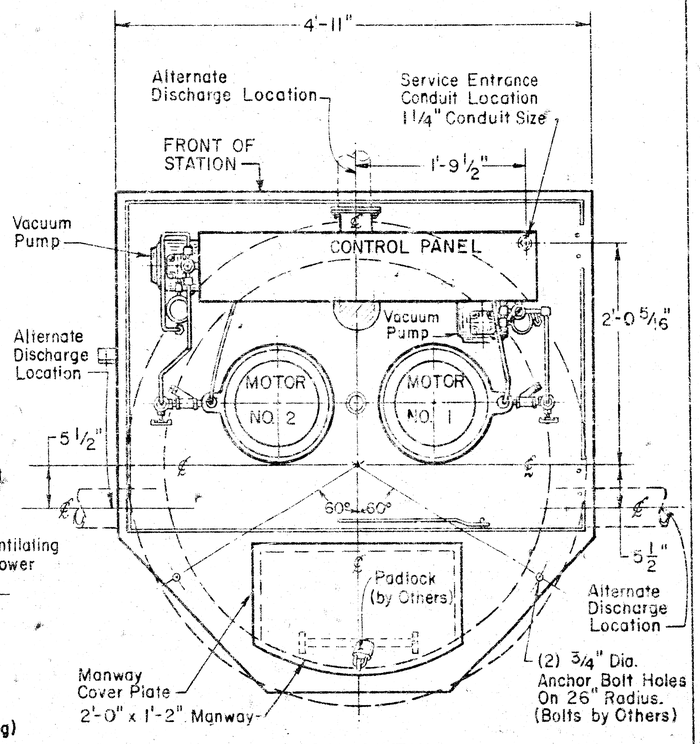

PLAN VIEW

MACHINERY CHAMBER

(COVER DELETED FOR CLARITY)

NOTES :-

1. Maximum Capacity – 300 G.P.M.
2. Allow One Minute Cycle Time, Based On Wet Well Capacity of 94 Gal. Per Foot.
3. If End of Discharge Line Is Below Elevation of Discharge Line at Point of Leaving Wet Well, Consult Factory.

PATENTED IN THE U.S.A. & FOREIGN COUNTRIES

DRAWING NO. 86 B 101
("D" SIZE DWG. 86D104)

N70-70

TOLERANCES UNLESS OTHERWISE STATED: FRACT ~, DECIMALS ~, ANGLES ~	DIMENSIONS ARE IN INCHES UNLESS OTHERWISE NOTED	Ecodyne Corporation Smith & Loveless Division An Affiliate of Ecodyne Corporation 9900 A Old Santa Fe Trail Lenexa, Kansas 66215	
	DRAWN BY: HASLAM DATE 7-14-70		
	CHKD. BY: OSBORNE DATE 7-21-70	TITLE: WET-WELL MOUNTED SEWAGE PUMP LIFT STATION	
	APPVD. BY: MARTIN DATE 7-21-70		
A INTI-21 3-71	SCALE none	SERIAL NO.	DRWG. NO. 86D104

FILMED FROM THE BEST AVAILABLE COPY