BENCHMARK:
" + " ON TOP OF CURB AT PARKING LOT, APPROX. 55' N & 35' E OF THE CENTERLINE INTERSECTION @ WICHITA AND THIRD STREET. ELEV. = 111.87 CITY DATUM

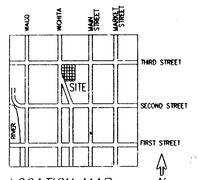

LOCATION MAP

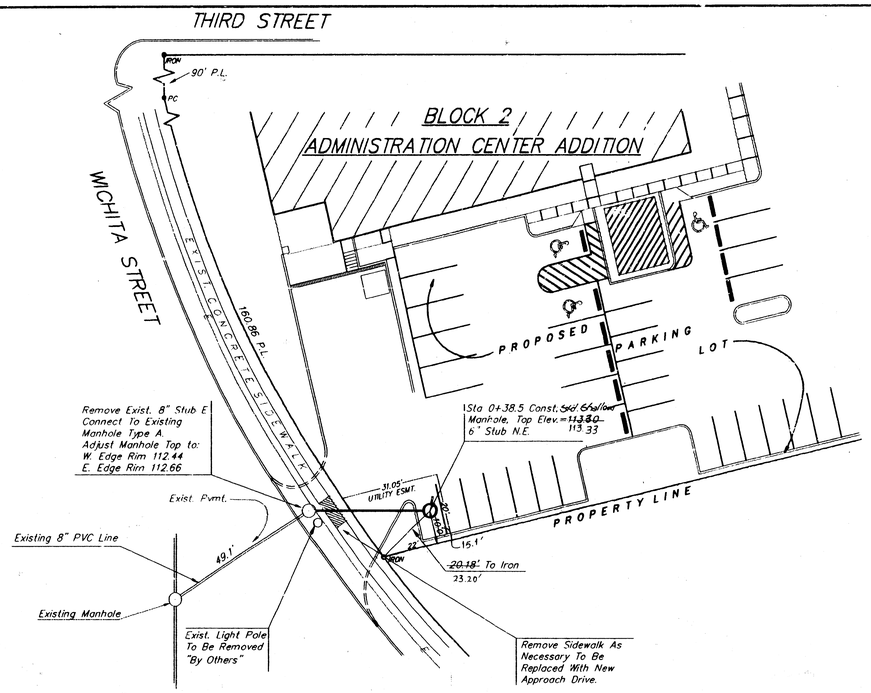

SCALE
1" = 20' Horiz.
1" = 5' Vert.

APPROVED AS NOTED
BY CITY ENGINEER OF WICHITA

Sanitary Sewers VRH 4/2/93
Storm Sewers
Driveway Approaches
Water Mains
Paving

NOTE TO CONTRACTORS

Inspection and testing for this project is to be provided by a Licensed Consulting Engineering Firm under contract with the Owner/Developer. Said inspection to be in accordance with the City of Wichita standard construction engineering practices and certified by a Licensed Professional Engineer. No work shall be performed in dedicated easements or public right-of-way by the Contractor without such inspection nor shall any work be commenced without written authorization by the City Engineer.

GENERAL NOTES

1. Underground utility service lines and overhead utility pole lines are to be adjusted as necessary by others prior to construction unless the plans specifically call for their adjustment by the Contractor or unless the plans specifically identify a utility to be adjusted by its owner during construction. Existing utilities and their location, as shown on the plans, represent the best information obtainable for design. The Contractor will be required to work around existing utilities within the right-of-way which do not conflict with proposed construction.
2. The Contractor shall be responsible for preserving property irons. The Contractor will be required to re-establish any property irons which are damaged or destroyed by his construction operations. Such irons shall be re-established by a licensed land surveyor in accordance with state laws.
3. Traffic will not be affected by construction on this project.

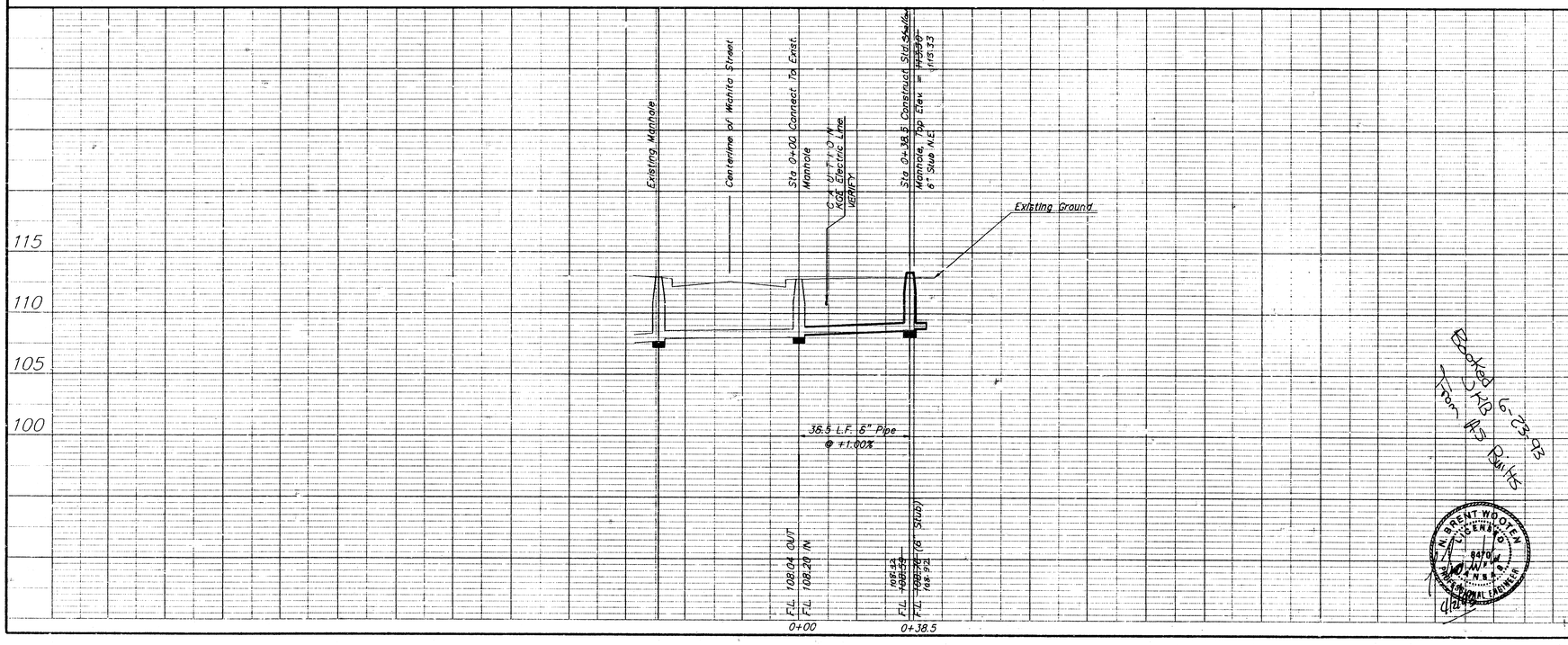

Booked 6-23-93 JKB From AS Builts

N. BRENT WOOTEN LICENSED 8470 KANSAS PROFESSIONAL ENGINEER 4/2/93

As Built 6-7-93 A.Z.

Private Sanitary Sewer
Blk 2, Administration Center Add.

BAUGHMAN COMPANY P. A.
ENGINEERING & SURVEYING
316/262-7271 • 315 ELLIS • WICHITA, KANSAS 67211

PROJECT NUMBER					SHEET
365PPS (607861)					1
DESIGN	DRAWN	UTM CHECK'D	DATE	SCALE	OF
N.B.W.	D.Y. / A.Z.		MAR. 93	1" = 20'	2

92-10-2448

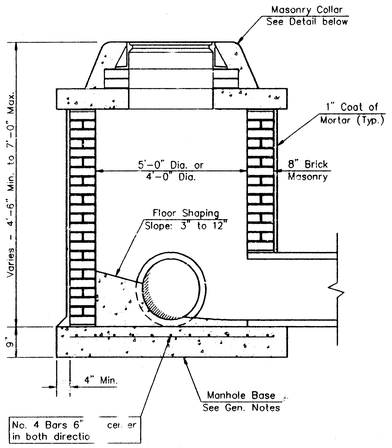

SHALLOW TYPE "A" MANHOLE

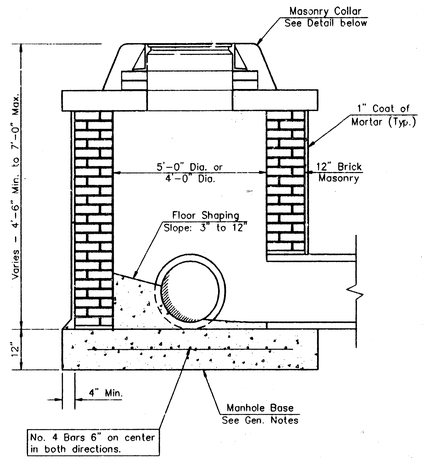

SHALLOW TYPE "B" MANHOLE

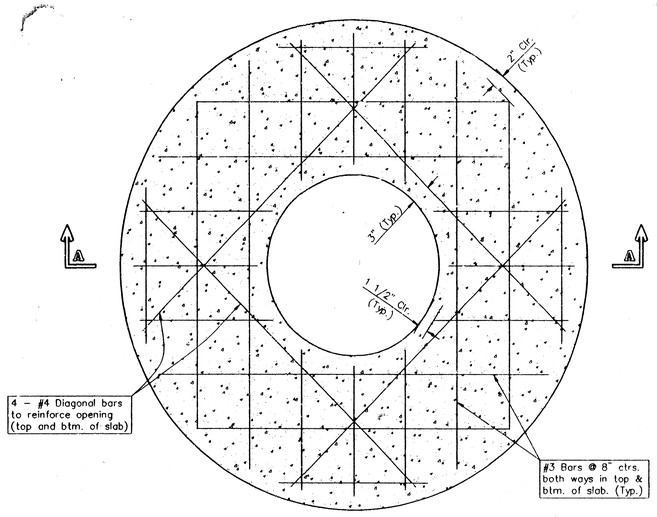

PLAN

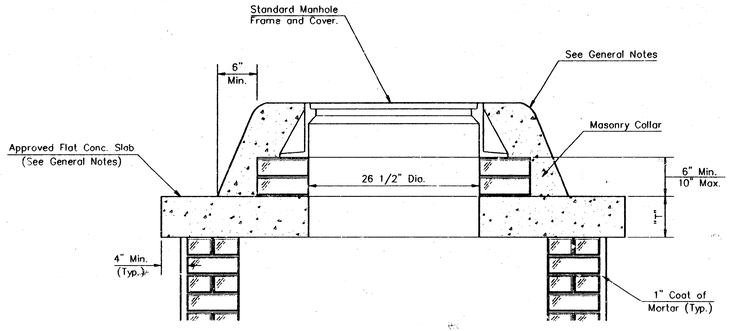

MASONRY COLLAR DETAIL

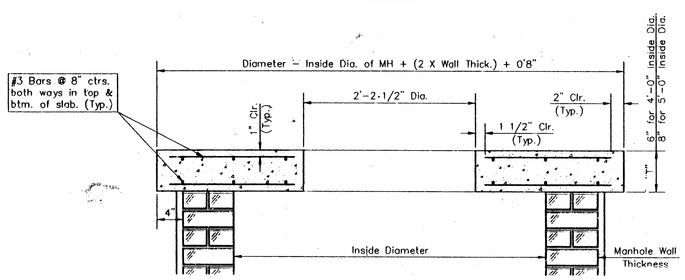

SECTION A-A

FLAT CONCRETE SLAB DETAILS

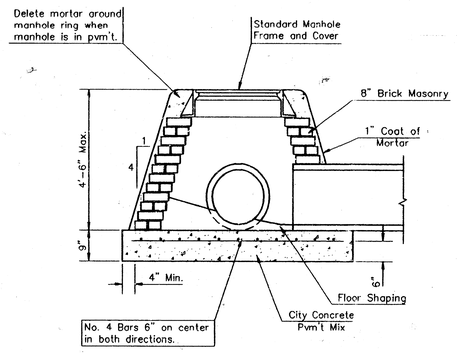

SPECIAL SHALLOW TYPE "A" MANHOLE

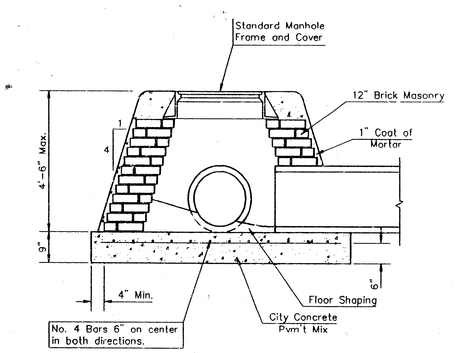

SPECIAL SHALLOW TYPE "B" MANHOLE

GENERAL NOTES

1. Mortar used in masonry construction shall contain 8 sacks of cement per cubic yard. Concrete used in manhole bases shall conform to the requirements of concrete for concrete pavement construction as specified in the city standard paving specifications using city concrete cement mix without air entraining admixture. Mortar shall be placed around the manhole ring as shown on the drawings when manholes are constructed in unpaved areas. Type "A" shallow manholes can be used on sewers when the manhole is not located within public street pavement. Manholes constructed where pipe sizes are smaller than 24" shall have an inside diameter of 4'. Manholes constructed where pipe sizes are 24" or larger shall have an inside diameter of 5'. Completed manhole shall be without leaks and water tight.

2. Reinforcing steel shall be installed in the manhole bases and shall consist of no. 4 bars placed on 6" centers in both directions. The manhole base reinforcement shall be placed 6" above the bottom of the manhole base. All costs for furnishing and installing reinforcing steel shall be included in the unit price bid for the manhole.

3. The floors of all manholes shall be shaped with flow channels such that the manholes will be self cleaning and free of areas where solids could be deposited as sewage flows through the manhole from all inlet pipes to the outlet pipe. Flow channels shall be formed to match the bottom halves of the inflowing pipes and the outflowing pipe as shown by the drawings. Manhole floors shall have slopes of 3 inches per foot in the areas outside of the flow channels sloped toward the flow channels. Pipes laid through manholes shall have the top half removed to neat lines for the full inside diameter of the manhole. Manhole floors shall then be shaped around the bottom half of the pipe which forms the flow channel.

4. Pipes installed within the excavation made for the manhole shall be cradled with concrete to the limits of the manhole excavation. When clay pipe is used, the cradle shall extend to the first joint outside the manhole. The cradle shall be terminated at the clay pipe joint in a manner which will maintain the flexibility of the joint. Cost of cradle within manhole excavation or to clay pipe joints adjacent to manhole shall be included in the unit price bid for the manhole.

5. Manhole cover castings and manhole frame castings shall conform to the requirements as indicated in the standard specifications and as shown in the standard detail drawings.

6. The crowns of inflowing pipes shall never be set lower than the crown of the outflowing pipe.

7. Standard shallow manholes type "A" and "B" shall be paid for at the unit price bid per each for the type and diameter indicated. Standard special shallow manholes type "A" and "B" shall be paid for at the unit price bid per each for the type indicated. All standard shallow manhole diameters will be 4' unless indicated otherwise.

8. All brick used in manhole construction shall meet Grade SW of ASTM C652 or C62-87.

CITY OF WICHITA, KANSAS

STANDARD SHALLOW MANHOLES
TYPE 'A' AND TYPE 'B'

PROJECT NUMBER
365PPS (607861)

SHEET 2 / OF 2

BAUGHMAN COMPANY P. A.
ENGINEERING & SURVEYING
316/262-7271 • 315 ELLIS • WICHITA, KANSAS 67211

DETAIL\SHLWMH.DWG