SANITARY SEWER EXTENSIONS FOR

BAY COUNTRY - PHASE II

Private Project Number
385 PPS (607861)

CITY OF WICHITA, KANSAS

Michael E. Lindebak City Engineer

General Notes

1. Underground utility service lines and overhead utility pole lines are to be adjusted as necessary by others prior to construction unless the plans specifically call for their adjustment by the Contractor or unless the plans specifically identify a utility to be adjusted by its owner during construction. Existing utilities and their location, as shown on the plans, represent the best information obtainable for design. The Contractor will be required to work around existing utilities within the right-of-way which do not conflict with proposed construction.
2. The Contractor shall notify pipeline companies at least 24 hours in advance of any work being performed across and/or adjacent to pipelines.
3. The Contractor shall give all property owners and/or tenants of developed property abutting the construction of this project a minimum of 48 hours notice prior to start of construction.
4. The Contractor shall be responsible for preserving property irons. The Contractor will be required to re-establish any property irons which are damaged or destroyed by his construction operations. Such irons shall be re-established by a licensed land surveyor in accordance with state laws.

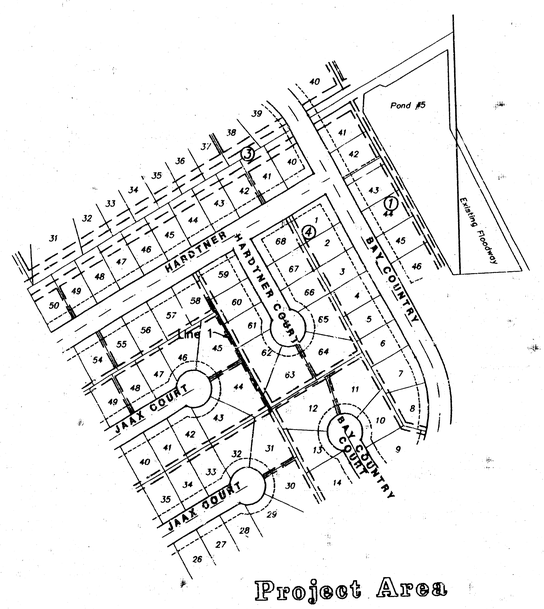

Project Area

SCALE: 1" = 150'

Sheet Index

1. Title Sheet
2. Plan Sheet
3. Detail Sheet
4. Riser Detail Sheet

APPROVED AS NOTED
BY CITY ENGINEER OF WICHITA

Sanitary Sewers 5/4/93 VRH

Storm Sewers _____

Driveway Approaches _____

Water Mains _____

Paving _____

Rec'd 2-14-94
JKB
From As Builts

NOTE TO CONTRACTORS

Inspection and testing for this project is to be provided by a Licensed Consulting Engineering Firm under contract with the Owner/Developer. Said inspection to be in accordance with the City of Wichita standard construction engineering practices and certified by a Licensed Professional Engineer. No work shall be performed in dedicated easements or public right-of-way by the Contractor without such inspection nor shall any work be commenced without written authorization by the City Engineer.

BAUGHMAN COMPANY P. A.
ENGINEERING & SURVEYING
316/262-7271 • 315 ELLIS • WICHITA, KANSAS 67211

FILMED FROM THE BEST AVAILABLE COPY

Bench Mark

R.R. Spike in HLP located at the N.E. Corner Lot 30, Block 1 Bay Country.
Elev. = 154.44 (City Datum)

"□" Cut in Top of Curb located at the N.W. Corner Lot 45, Block 1 Bay Country.
Elev. = 153.87 (City Datum)

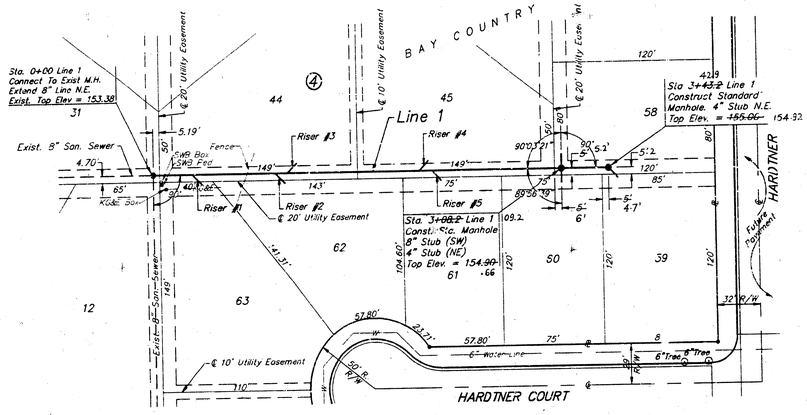

Riser Table

Riser Number	Line Number	Station	Direction	Lot, Block	L.F. 4" Riser	Flo Main	Top Riser
1	1	0+30	Right	63,4	6.5	140.82	147.3
2	1	0+90	Right	62,4	6	141.07	147.1
3	1	1+00	Left	44,4	6	141.11	147.1
4	1	2+00	Left	45,4	5.5	141.51	147.0
5	1	2+10	Right	61,4	5.3	141.55	147.0

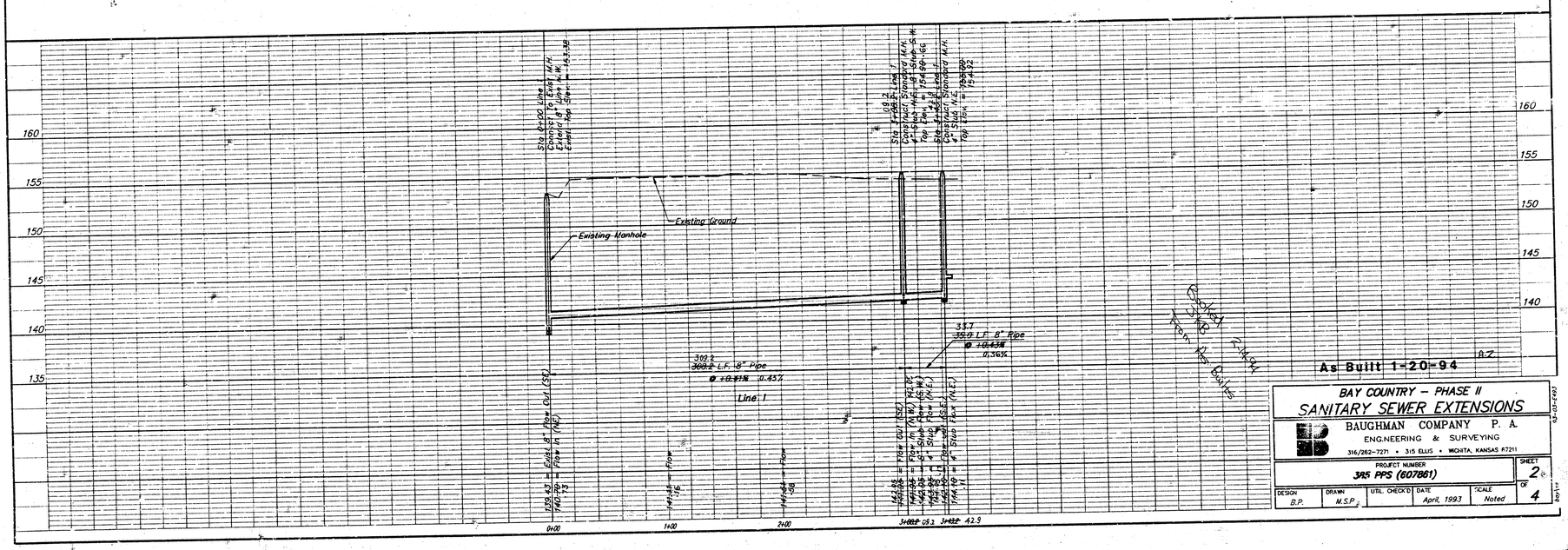

As Built 1-20-94

BAY COUNTRY – PHASE II
SANITARY SEWER EXTENSIONS

BAUGHMAN COMPANY P. A.
ENGINEERING & SURVEYING
316/262-7271 • 315 ELLIS • WICHITA, KANSAS 67211

PROJECT NUMBER 385 PPS (607861)

SHEET 2 OF 4

DESIGN	DRAWN	UTIL. CHECK'D	DATE	SCALE
B.P.	M.S.P.		April, 1993	Noted

FILMED FROM THE BEST AVAILABLE COPY....

SEWER APPURTENANCES DETAILS

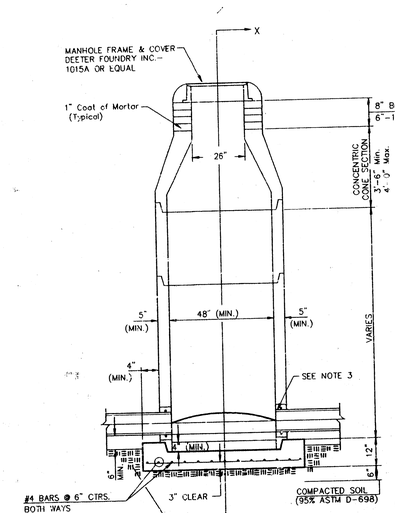

TYPE P
STANDARD MANHOLE

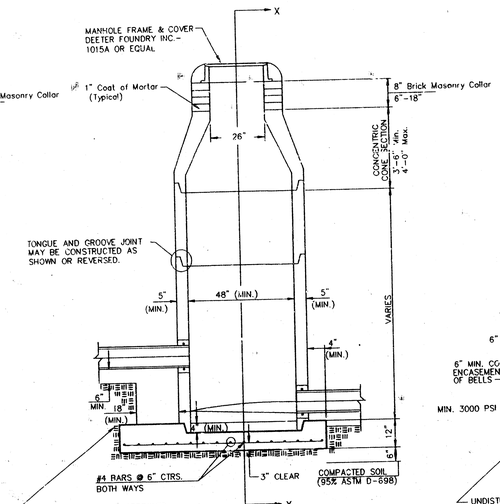

TYPE P
INSIDE DROP MANHOLE

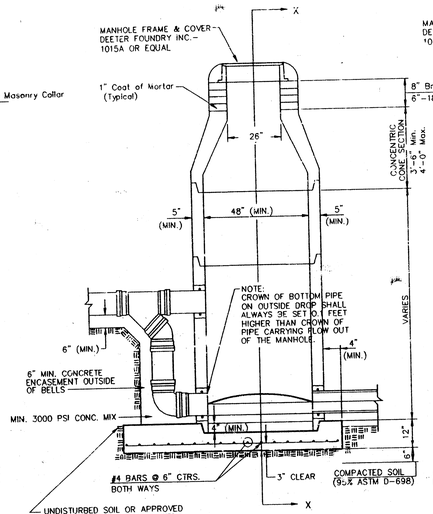

TYPE P
OUTSIDE DROP MANHOLE

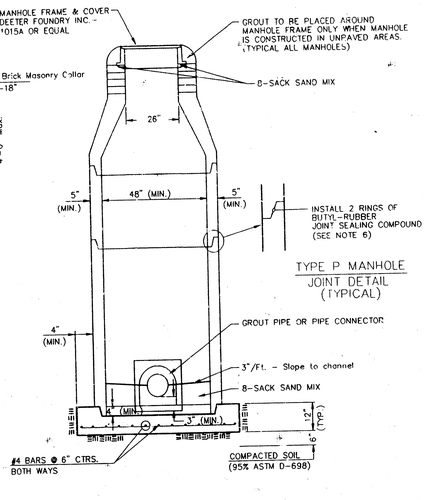

SECTION X
(TYPICAL)

GENERAL NOTES

PRECAST MANHOLE NOTES

1. ALL PRECAST CONCRETE MANHOLE SECTIONS SHALL CONFORM TO THE LATEST REVISIONS OF A.S.T.M. C478 AS MODIFIED BY THE SPECIFICATIONS.
2. NON-SHRINK GROUT SHALL BE NON-METALLIC TYPE.
3. APPROVED FLEXIBLE WATERSTOP GASKETS SHALL BE INSTALLED TO JOIN THE SEWER TO THE MANHOLE WALL WHEN A.B.S. COMPOSITE PIPE OR P.V.C. PIPE IS USED. FOR OTHER TYPES OF PIPE THE SEWER SHALL BE GROUTED IN PLACE WITH NON-SHRINK GROUT. THE SEWER PIPE SHALL BE SUPPORTED WITH CONCRETE ENCASEMENT A MINIMUM OF 3 FEET FROM THE MANHOLE WALL AND TO THE FIRST JOINT FOR V.C.P. SUCH THAT THE JOINT REMAINS FLEXIBLE.
4. ALL INSIDE SURFACES OF THE CONCRETE MANHOLE WHICH WOULD BE EXPOSED TO SEWER GAS SHALL BE COATED WITH 2 COATS THEMEC SERIES 66 HI-BUILD EPOXOLINE, DRY THICKNESS OF 8 MILS (MIN.)
5. EXTERIOR MANHOLE WALLS SHALL BE COATED WITH 2 COAT MOBILARMA 633 BITUMINOUS COATING.
6. JOINT SEALING COMPOUND SHALL BE KENT SEAL NO. 2 OR APPROVED EQUAL.
7. PRECAST MANHOLES SHALL BE SET AT LEAST 4 INCHES INTO THE MANHOLE BASE.
8. TOP OF MANHOLE FLOOR SLAB SHALL BE AT LEAST 3 INCHES BELOW THE FLOW LINE OF THE OUTLET PIPE TO INSURE SUFFICIENT MINIMUM THICKNESS OF SHAPED INVERT.
9. LIFTING HOLES SHALL BE FILLED WITH NON-SHRINK GROUT AND THE INTERIOR SURFACE COATED AS SPECIFIED.
10. MORTAR USED IN MASONRY CONSTRUCTION SHALL CONTAIN 8 SACKS OF CEMENT PER CUBIC YARD. CONCRETE USED IN MANHOLE BASES SHALL CONFORM TO THE REQUIREMENTS OF CONCRETE FOR CONCRETE PAVEMENT CONSTRUCTION AS SPECIFIED IN THE CITY STANDARD PAVING SPECIFICATIONS USING CITY CONCRETE PAVEMENT MIX WITHOUT AIR ENTRAINING ADMIXTURE. MORTAR SHALL BE PLACED AROUND THE MANHOLE RING AS SHOWN ON THE DRAWINGS WHEN MANHOLES ARE CONSTRUCTED IN UNPAVED AREAS. MANHOLES CONSTRUCTED WHERE PIPE SIZES ARE SMALLER THAN 24" SHALL HAVE AN INSIDE DIAMETER OF 4'. MANHOLES CONSTRUCTED WHERE PIPE SIZES ARE 24" OR LARGER SHALL HAVE AN INSIDE DIAMETER OF 5'. COMPLETED MANHOLE SHALL BE WITHOUT LEAKS AND WATER TIGHT.
11. REINFORCING STEEL SHALL BE INSTALLED IN THE MANHOLE BASES AND SHALL CONSIST OF NO. 4 BARS PLACED ON 6" CENTERS IN BOTH DIRECTIONS. THE MANHOLE BASE REINFORCEMENT SHALL BE PLACED AT LEAST 3" ABOVE THE BOTTOM OF THE MANHOLE BASE. ALL COSTS FOR FURNISHING AND INSTALLING REINFORCING STEEL SHALL BE INCLUDED IN THE UNIT PRICE BID FOR THE MANHOLE.
12. OPENINGS SHALL BE CUT INTO THE MANHOLE WALL WHEN OUTSIDE DROPS ARE CONSTRUCTED ON EXISTING MANHOLES. SUCH OPENINGS CUT INTO EXISTING MANHOLES SHALL BE AS SMALL AS PRACTICAL TO FACILITATE INSTALLING AND GROUTING THE NEW PIPE IN PLACE. WATERSTOP GASKETS SHALL BE USED WITH P.V.C. AND A.B.S. COMPOSITE PIPE. THE NEW PIPE SHALL BE GROUTED INTO THE OPENING USING AN APPROVED NONSHRINK GROUT FOR THE FULL MANHOLE WALL THICKNESS. THE EXTERIOR OF THE COMPLETED CONNECTION SHALL BE SEALED WITH AN APPROVED BITUMINOUS COATING SUCH THAT THE CONNECTION WILL BE WATER TIGHT. FLOOR OF MANHOLE SHALL BE MODIFIED TO FORM NEW FLOW CHANNEL FOR THE NEW CONNECTION AS INDICATED BY THE DRAWING. THIS WORK, INCLUDING MODIFICATION OF MANHOLE FLOOR, SHALL BE PAID FOR AT THE UNIT PRICE BID FOR OUTSIDE DROP STACK CONSTRUCTED ON EXISTING MANHOLE.
13. THE FLOORS OF ALL MANHOLES SHALL BE SHAPED WITH FLOW CHANNELS SUCH THAT THE MANHOLES WILL BE SELF CLEANING AND FREE OF AREAS WHERE SOLIDS COULD BE DEPOSITED AS SEWAGE FLOWS THROUGH THE MANHOLE FROM ALL INLET PIPES TO THE OUTLET PIPE. FLOW CHANNELS SHALL BE FORMED TO MATCH THE BOTTOM HALVES OF THE INFLOWING PIPES AND THE OUTFLOWING PIPE AS SHOWN BY THE DRAWINGS EXCEPT FOR INSIDE DROP MANHOLES. FLOW CHANNELS FOR INSIDE DROP MANHOLES SHALL BE CONSTRUCTED AS INDICATED BY THE DRAWING. MANHOLE FLOORS SHALL HAVE SLOPES OF 3 INCHES PER FOOT IN THE AREAS OUTSIDE OF THE FLOW CHANNELS SLOPED TOWARD THE FLOW CHANNELS. PIPES LAID THROUGH MANHOLES SHALL HAVE THE TOP HALF REMOVED TO NEAT LINES FOR THE FULL INSIDE DIAMETER OF THE MANHOLE. MANHOLE FLOORS SHALL THEN BE SHAPED AROUND THE BOTTOM HALF OF THE PIPE WHICH FORMS THE FLOW CHANNEL.
14. PIPES INSTALLED WITHIN THE EXCAVATION MADE FOR THE MANHOLE SHALL BE CRADLED WITH CONCRETE TO THE LIMITS OF THE MANHOLE EXCAVATION. WHEN CLAY PIPE IS USED, THE CRADLE SHALL EXTEND TO THE FIRST JOINT OUTSIDE THE MANHOLE. THE CRADLE SHALL BE TERMINATED AT THE CLAY PIPE JOINT IN A MANNER WHICH WILL MAINTAIN THE FLEXIBILITY OF THE JOINT. COST OF CRADLE WITHIN MANHOLE EXCAVATION OR TO CLAY PIPE JOINTS ADJACENT TO MANHOLE SHALL BE INCLUDED IN THE UNIT PRICE BID FOR THE MANHOLE.
15. MANHOLE COVER CASTINGS AND MANHOLE FRAME CASTINGS SHALL CONFORM TO THE REQUIREMENTS AS INDICATED IN THE STANDARD SPECIFICATIONS AND AS SHOWN IN THE STANDARD DETAIL DRAWING.
16. THE VERTICAL DROP IN INSIDE DROP MANHOLES SHALL NOT EXCEED 2' FOR INFLOWING PIPES SIZED 12" OR SMALLER AND 2' FOR INFLOWING PIPES LARGER THAN 12". THE CROWNS OF INFLOWING PIPES SHALL NEVER BE SET LOWER THAN THE CROWN OF THE OUTFLOWING PIPE.
17. STANDARD MANHOLES AND STANDARD INSIDE DROP MANHOLES SHALL BE BID AS STANDARD MANHOLES FOR THE TYPE AND DIAMETER INDICATED. OUTSIDE DROP MANHOLES SHALL BE BID AS STANDARD OUTSIDE DROP MANHOLES FOR THE TYPE AND DIAMETER INDICATED. ALL MANHOLE DIAMETERS WILL BE 4' UNLESS INDICATED OTHERWISE.
18. A BRICK MASONRY COLLAR SHALL BE INSTALLED BETWEEN THE CAST IRON FRAME AND THE CONCENTRIC CONE. THE COLLAR WILL HAVE 8" WALLS AND A VERTICAL HEIGHT OF 6" MINIMUM AND 18" MAXIMUM. A 1" COAT OF MORTAR WILL BE PLASTERED ON THE OUTSIDE OF THE COLLAR. THE USE OF PRE-CAST CONCRETE SPACERS FOR MANHOLE TOP ADJUSTMENT IS ALSO ALLOWED.

CITY OF WICHITA, KANSAS
STANDARD MANHOLE DETAILS
SEWER APPURTENANCES DETAILS

BAUGHMAN COMPANY P. A.
ENGINEERING & SURVEYING
316/262-7271 • 315 ELLIS • WICHITA, KANSAS 67211

PROJECT NUMBER				SHEET
385 PPS (507861)				3 OF 4
DESIGN	DRAWN	CHK'D	DATE	SCALE
B.P.	M.S.P.		April 1993	None

33-SU-1-F492

FILMED FROM THE BEST AVAILABLE COPY

VERTICAL RISER DETAILS
ADOPTED AS STANDARD DESIGN
BY
CITY OF WICHITA, KANSAS
OCTOBER 1992

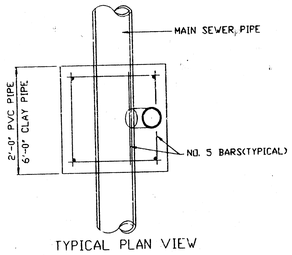

TYPICAL PLAN VIEW

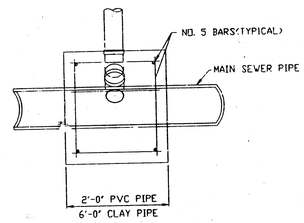

TYPICAL SECTION X-X

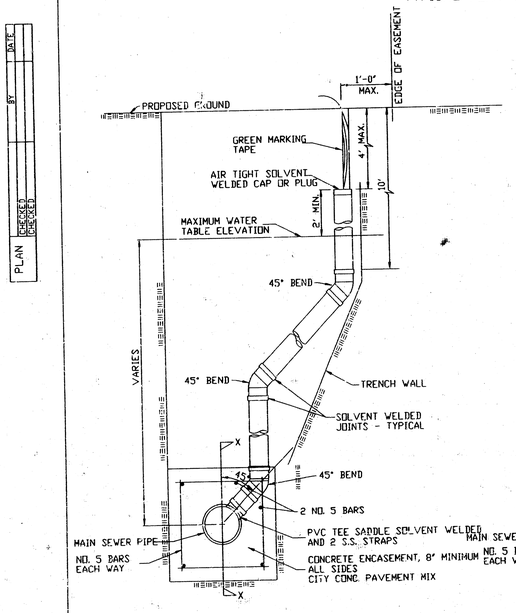

METHOD "A"

METHOD "B"

METHOD "C"

NOTE: RISER PIPE REQUIREMENTS AT MANHOLE STUBS SHALL BE SIMILAR TO THOSE SHOWN ABOVE.

GENERAL NOTES

1. RISERS. Risers shall be installed to serve all lots or tracts where the sanitary sewer main is below the water table. Risers shall also be installed to serve all lots and tracts where the sanitary sewer main depth is greater than 12 feet below the proposed ground elevation. Installation of risers because of field conditions shall be as approved by the Construction Engineer. The location of the risers to serve developed property shall be approved by the property owner and the Construction Engineer.

2. PIPE STUBS. Pipe stubs shall be installed in manholes where locations of manholes will provide satisfactory service connection as determined by the Construction Engineer. The vertical distance between the flowline of the manhole pipe stub and the flowline of the sanitary sewer main out of the manhole shall not exceed 2 feet. Risers shall be utilized at manhole pipe stubs as indicated in Note 1. Manhole pipe stubs shall be set such that the top of the stub is not lower than the top of the sanitary sewer main.

3. SIZING. Pipe stubs and risers shall be sized according to the plans and riser table where risers are indicated by the plans. Where risers or pipe stubs are required because of field conditions, the risers and stubs shall be six-inch diameter for commercial or industrial properties and 4" or 6" diameter for residential properties, based on lot size, and sanitary sewer main depth. Sizing of risers and stubs shall be approved by the Construction Engineer prior to installation.

4. RISER OR STUB MATERIAL. Risers and stubs shall be constructed of SDR 35 PVC Pipe or Schedule 40 PVC Pipe, meeting the requirements of the latest revision of A.S.T.M. All pipe joints shall be solvent welded.

5. REINFORCED CONCRETE ENCASEMENT. Riser connections to clay pipe sanitary sewers shall be reinforced concrete encased both ways from the riser centerline. The reinforced concrete encasement shall extend three feet from the riser centerline or stop at the first sanitary sewer pipe joint within three feet of the riser centerline. Riser connections to PVC Sanitary Sewer mains shall be reinforced concrete encased one foot each way from the riser centerline. The concrete encasement shall be reinforced using reinforcing steel as shown in the appropriate drawing. The concrete shall conform to the City Standard Specifications for concrete pavement.

6. BEDDING. Bedding around the sanitary sewer riser shall be compacted Pipe Bedding Type 1 or 2. The bedding shall be placed and compacted from the depth of the sanitary sewer main to the top of the sanitary sewer riser pipe. Compacted Pipe Bedding Type 1 or 2 shall be required for all risers whether constructed in vertical wall or sloped wall trenches. Bedding material and construction practices shall be approved by the Construction Engineer prior to installation.

7. SUPPORT OF RISERS. Sanitary sewer riser pipe shall be supported during trench backfill. The riser pipe shall be held in a vertical position at all times until trench backfill and compaction has been completed. Contractor's methods for supporting and backfilling the riser pipe shall be approved by the Construction Engineer.

8. PLUGGING. The ends of the riser pipes and manhole stubs shall be plugged using an airtight solvent welded cap or plug. Cap or plug fittings shall be approved by the Construction Engineer prior to installation. Caps or plugs which do not provide an airtight seal will not be accepted.

9. TOP OF THE RISER PIPE. The top elevation of the sanitary sewer riser pipe shall be built per plan elevations, unless otherwise directed by the Construction Engineer. Where riser elevations are not shown on the plans, the top of the risers shall be set at an elevation four feet below the proposed ground surface. If ground water is encountered, the top of the riser pipe shall be set at an elevation two feet (min) above the maximum water table elevation, regardless of the riser elevation shown on the plans.

10. MARKING. Locations of the ends of the sanitary sewer riser pipe shall be marked by fastening green colored plastic tape to the end of the riser. The tape shall be supported by a length of wooden 2 x 4 extending from the top of the riser pipe to the proposed ground surface. The green tape shall be visible and extend one foot above the proposed ground surface. The green tape shall be 4 mil Polyethylene film with a minimum width of three inches, specifically manufactured for the purpose of identification of underground sewers.

11. LOCATION MEASURES. The project inspector shall record and document the location of all risers constructed as measured from the nearest manhole, indicating the direction from the manhole, the direction and distance from the main, riser size, and elevation of the top of the riser.

12. RISER LOCATION. The riser shall be located per plan if shown. If not shown on the plan, the riser shall be located at the center of the lot, within one foot of the property side of the easement for the lot being served. All riser locations shall be approved by the Construction Engineer prior to installation.

13. PAYMENT. "Sanitary sewer risers" shall be paid for at the contract unit price per each, which price shall be Full Compensation for all pipe, fittings, marking tape, length of wooden 2 x 4 reinforced concrete encasement, support during backfill, backfill labor, site restoration, and any other items necessary to complete the work.

"Manhole stubs" shall be paid for at the contract unit price per each, which shall be Full Compensation for all labor, material, and incidentals necessary to complete the work including all pipe, fittings, reinforced concrete encasement, and all other items as required and listed for "Sanitary Sewer Risers".

18-0-1-10

FILMED FROM THE BEST AVAILABLE COPY