PRIVATE SANITARY SEWER IMPROVEMENTS
to Serve
RESERVE "B"
FALCON FALLS 2ND ADDITION
Private Project Number: 1564 PPS(607861)
CITY OF WICHITA, KANSAS
Jim Armour, P.E. City Engineer
July 2005

Mies Construction, Inc.- Contractor
Baughman Co.- Inspector
Released 8/10/05
Per Plans
.pdf by JEL 8/11/05

Benchmark:

Brass Plate on North Hub Guard of R.C.B.C. 50' East of NW Corner NE 1/4, SEC. 22, TWP. 26-S, R-1-E. Elevation = 1371.83 NGVD29

Index

Cover/Plan/Profile Sheet	1
8" Cleanout Detail	2
Erosion Control BMP's	3-6
Falcon Falls Add. Plat	7
Falcon Falls 2nd Add Plat (Proposed)	8

General Notes

1. Contractor will be required to provide notice to utility companies a minimum of forty-eight (48) hours prior to any excavation, as follows:

Kansas One-Call	687-2470

The Contractor must notify the following in case of an emergency:

Cox Communications	262-4270
Kansas Gas Service Company	1-888-462-4950
Westar Energy (Electric)	383-8650
Aquila Energy (Gas)	1-800-303-0357
SBC (Telephone)	1-800-286-8313
City of Wichita Water Dept. (Water)	262-6000
City of Wichita Sewer Maint. (SS)	262-6000
City of Wichita Storm Sewer Maint.	268-4090
City of Wichita Traffic Maint.	268-4034

2. Utility service lines, poles, valve boxes, meters, et cetera are to be adjusted as necessary by others prior to construction unless the plans specifically call for their adjustment by the Contractor or unless the plans specifically identify a utility to be adjusted by its owner during construction. Existing utilities and their location, as shown on the plans represent the best information obtainable for design and shall be field verified. The contractor will be required to work around existing utilities within the right-of-way which do not conflict with proposed construction.

3. Contractor shall not start work on the project until the project inspector is assigned to the project and is present on the site. Contractor shall not start on the project until all necessary bonds and permits have been obtained. Bonds may include but are not limited to Statutory, Performance & Maintenance for areas in public right-of-way and easement. For projects within the City of Wichita contact Tom Mason (268-4574). Any work done without inspection will be required to be uncovered for inspection.

4. Rubble from the removal of miscellaneous structures and excess excavation which is to be wasted shall be disposed of on sites to be provided by the Contractor. These sites shall be approved by the Engineer as to suitability, appearance and site location. Locations that, in the opinion of the Engineer, will leave an unsightly appearance will not be approved. All disposal sites must be approved by the Kansas Department of Health and Environment. Material either stockpiled or disposed of in a flood plain would require a Kansas State Board of Agriculture permit. Any material dumped in waters of the United States or wetlands is subject to U.S. Corps. of Engineers

5. Trees and shrubs in public right-of-way which are in direct conflict with proposed new construction shall be removed by the Contractor with the Engineer's approval. Trees and shrubs which are not in direct conflict with proposed new construction shall be saved and protected from damage.

6. The Contractor shall give all property owners and/or tenants of developed property abutting the construction of this project a minimum of ten (10) days advance notice prior to start of construction.

7. The Contractor shall be responsible for preserving property irons. The Contractor will be required to re-establish any property irons which are damaged or destroyed by his construction operations. Such irons shall be reestablished by a licensed land surveyor in accordance with state laws.

8. When connecting to existing manhole or stub, the contractor shall reshape manhole bottom or adjust the existing stub's alignment or elevation as necessary. Cost shall be subsidiary to project.

9. The Contractor shall be responsible for maintaining continuous flow of sewage through construction. Contractor's proposed method for maintaining sewage flow shall be approved by the Engineer. Cost of maintaining flow of sewage through construction will not be paid for directly and this cost shall be considered as subsidiary to the other pay items of work.

10. All sanitary sewers shall be installed in accordance with the most recent edition of City of Wichita, Kansas Standard Specifications for the Construction of City Projects.

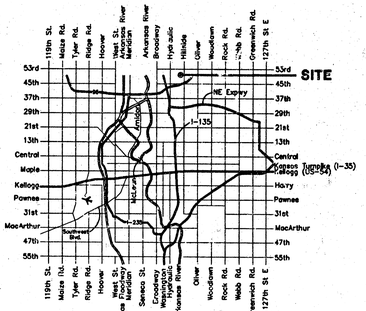

Vicinity Map

APPROVED AS NOTED
BY CITY ENGINEER OF WICHITA

Sanitary Sewers VRH 7/18/05

NOTE TO CONTRACTORS

Installation, inspection and testing for this project is to be provided by a Licensed Consulting Engineering Firm under contract with the Owner/Developer. Said Inspection to be in accordance with the City of Wichita standard construction engineering practices and certified by a Licensed Professional Engineer. No work shall be performed in dedicated easements or public right-of-way by the Contractor without such inspection nor shall any work be commenced without written authorization by the City Engineer. All Construction and Materials shall comply with the City of Wichita Specifications and Standards (on file and available in the City Engineer's Office).

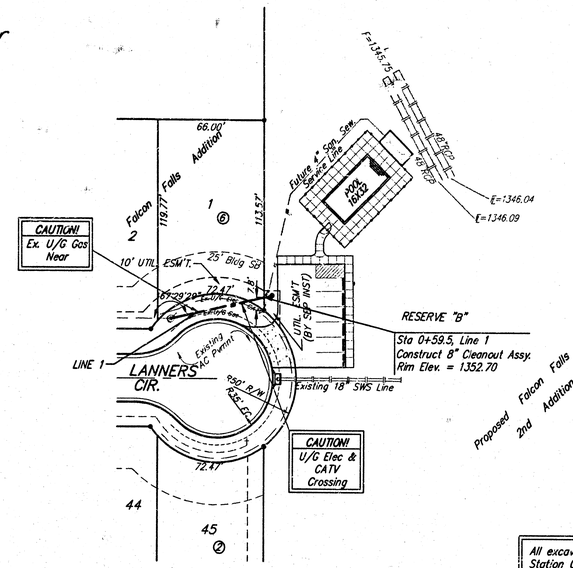

Scale: 1" = 40' Horizontal
1" = 5' Vertical
• = Iron

All excavation for Line 1, from Station 0+00 to Station 0+59.5, shall be sand backfilled to within two feet of existing grade. The sand shall be vibrated and water jetted during backfilling. Cost shall be incidental to pipe cost.

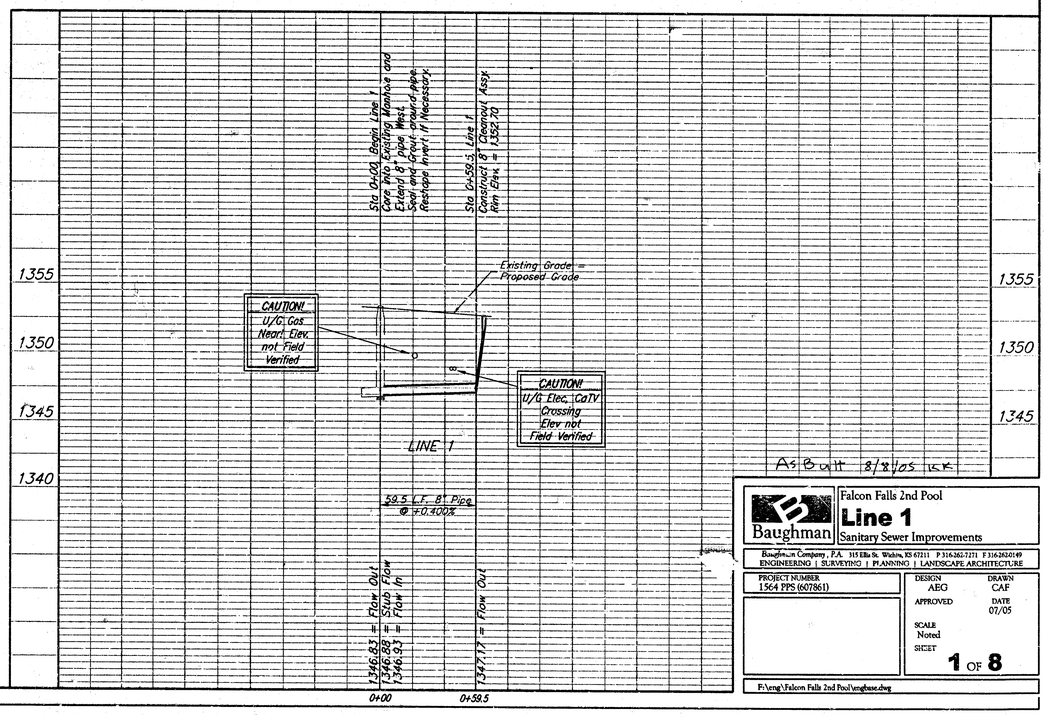

As Built 8/18/05 VRH

Baughman Company, P.A. 315 Ellis St. Wichita, KS 67211 P 316.262.7271 F 316.262.0149
ENGINEERING | SURVEYING | PLANNING | LANDSCAPE ARCHITECTURE

Falcon Falls 2nd Pool
Line 1
Sanitary Sewer Improvements

PROJECT NUMBER	1564 PPS (607861)
DESIGN	AEG
DRAWN	CAF
APPROVED	
DATE	07/05
SCALE	Noted
SHEET	1 OF 8

F:\eng\Falcon Falls 2nd Pool\engbase.dwg

18 17 04 05

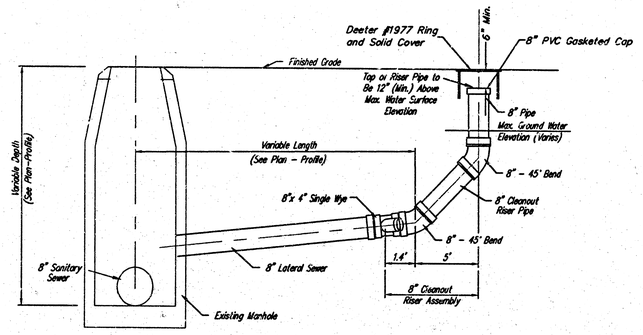

NOTES

1. 8" Lateral to be Air-Tested up to the Top of PVC Pipe, per Standard Specifications.

2. All PVC pipe fittings in cleanout riser assembly shall be solvent-welded, except 8" pipe cap.

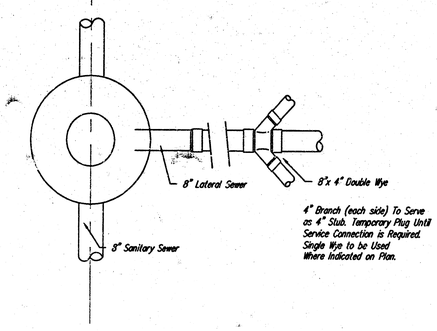

8" CLEANOUT RISER ASSEMBLY DETAIL

Baughman

Cleanout Riser Details

Baughman Company, P.A. 315 Ellis St. Wichita, KS 67211 P 316-262-7271 F 315-263-0149
ENGINEERING | SURVEYING | PLANNING | LANDSCAPE ARCHITECTURE

PROJECT NUMBER
1564 PPS (607861)

REVISIONS:

DESIGN | DRAWN

APPROVED | DATE 07/05

SCALE
NONE

SHEET
2 OF 8

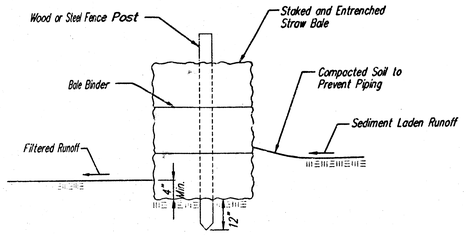

STRAW BALE BARRIERS

Material Specification:

Bale slope barriers may be constructed of wheat straw, oat straw, prairie hay, or bromegrass hay that is free of weeds declared noxious by the Kansas State Board of Agriculture.
The stakes used to anchor the bales should be a hardwood material with the following minimum dimensions: 2" square (nominal) by 4' long.

Placement:

A slope barrier should be used at the toe of a slope when a ditch does not exist. The slope barrier should be placed on nearly level ground 5' to 10' away from the toe of a slope. The barrier is placed away from the toe of the slope to provide adequate storage for settling out sediment.
When practicable, bale slope barriers should be placed along contours to avoid a concentration of flow.
Bale slope barriers can also be placed along right-of-way fence lines to keep sediment from crossing onto adjacent property. When placed in this manner, the slope barrier will not likely follow contours.

Proper installation method:

Excavate a trench the length of the planned slope barrier that is 4" deep and a bale's width wide. Make sure that the trench is excavated along a single contour. When practicable, slope barriers should be placed along contours to avoid a concentration of flow. Place the soil on the upslope side of the trench for later use.
Place the bales in the trench, making sure that they are butted tightly. Two stakes should be driven through each bale along the centerline of the ditch check, approximately 6" to 8" in from the bale ends. Stakes shoul* be driven at least 12" into the ground.
Once all the bales have been installed and anchored, place the excavated soil against the upslope side of the check and compact it. The compacted soil should be no more than 3" to 4" deep.

List of common placement/installation mistakes to avoid:

When practicable, do not place bale slope barriers across contours. Slope barriers should be placed along contours to avoid a concentration of flow. Concentrated flow over a slope barrier creates a scour hole on the downslope side of the barrier. The scour hole eventually undermines the bales and the barrier fails.
Do not place bale slope barriers in areas with shallow soils underlain by rock. If the barrier is not anchored sufficiently, it will wash out.
Bale slope barriers must be dug into the ground. Bales at ground level do not work because they allow water to flow under the barrier.

Inspection and Maintenance:

Bale slope barriers should be inspected every 7 days and within 24 hours of a rainfall of 1/2" or more. The following is a list of questions that should be addressed during each inspection:

Are there any points along the slope barrier where water is concentrating?
Does water flow under the slope barrier?
Does water flow through spaces between abutting bales?
Are any bales dislodged?
Are bales decomposing due to age and/or water damage?
Does sediment need to be removed from behind the slope barrier?

NOTE: Point A must be higher than Point B so that water flows over the bales and not around them.

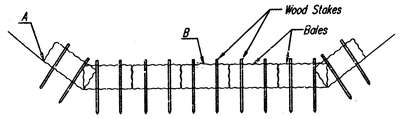

STRAW BALE DITCH CHECKS

Material Specification:

Bale ditch checks may be constructed of wheat straw, oat straw, prairie hay, or bromegrass hay that is free of weeds declared noxious by the Kansas State Board of Agriculture.
The stakes used to anchor the bales should be a hardwood material with the following minimum dimensions: 2" square (nominal) by 4' long.
Optional: The downstream scour apron should be constructed of a double-netted straw erosion-control blanket at least 6" wide.
Optional: The metal landscape staples used to anchor the erosion-control blanket should be at least 8" long.

Placement:

Bale ditch checks should be placed perpendicular to the flowline of the ditch.
The ditch check should extend far enough so that the ground level at the ends of the check is higher than the top of the lowest center bale. This prevents water from flowing around the check.
Checks should not be placed in ditches where high flows are expected. Rock checks should be used instead.
Bales should be placed in ditches with slopes of 6% or less. For slopes steeper than 6%, rock checks should be used.
The following table provides check spacing for a given ditch grade:

Ditch grade (%)	Check Spacing (feet)
0.5	200
1.0	200
2.0	100
3.0	65
4.0	50
5.0	40
6.0	30

Proper installation method:

Excavate a trench perpendicular to the ditch flowline that is 4" deep and a bale's width wide. Extend the trench in a straight line along the entire length of the proposed ditch check. Place the soil on the upstream side of the trench-it will be used later.
Optional: On the downstream side of the trench, roll out a length of erosion-control blanket (scour apron) equal to the length of the trench. Place the upstream edge of the erosion-control blanket along the bottom upstream edge of the trench. The erosion control blanket should be anchored in the trench with one row of 8" landscape staples placed on 18" centers. The remainder of the erosion-control blanket (the portion that is not lying in the trench) will serve as the downstream scour apron. This section of the blanket should be anchored to the ground with 8" landscape staples placed around the perimeter of the blanket on 18" centers. The remainder of the blanket should be anchored using two evenly spaced rows of 8" landscape staples on 18" centers placed perpendicular to the flowline of the ditch.
Place the bales in the trench, making sure that they are butted tightly. Two stakes should be driven through each bale along the centerline of the ditch check, approximately 6" to 8" in from the bale ends. Stakes should be driven at least 12" into the ground.
Once all the bales have been installed and anchored, place the excavated soil against the upstream side of the check and compact it. The compacted soil should be no more than 3" to 4" deep and extend upstream no more than 24".

List of common placement/installation mistakes to avoid:

Do not place a bale ditch check directly in front of a culvert outlet. It will not stand up to the concentrated flow.
Do not place bale ditch checks in ditches that will likely experience high flows. They will not stand up to concentrated flow.
Follow prescribed ditch-check spacing guidelines. If spacing guidelines are exceeded, erosion will occur between the ditch checks.
Do not allow water to flow around the ditch check. Make sure that the ditch check is long enough so that the ground level at the ends of the check is higher than the top of the lowest center bale.
Do not place bale ditch checks in channels with shallow soils underlain by rock. If the check is not anchored sufficiently, it will wash out.
Bale ditch checks must be dug into the ground. Bales at ground level do not work because they allow water to flow under the check.

Inspection and Maintenance:

Bale ditch checks should be inspected every 7 days and within 24 hours of a rainfall of 1/2" or more. The following is a list of questions that should be addressed during each inspection:

Does water flow around the ditch check?
Does water flow under the ditch check?
Does water flow through spaces between abutting bales?
Are any bales and/or scour aprons (optional) dislodged?
Are bales decomposing due to age and/or water damage?
Does sediment need to be removed from behind the ditch check?

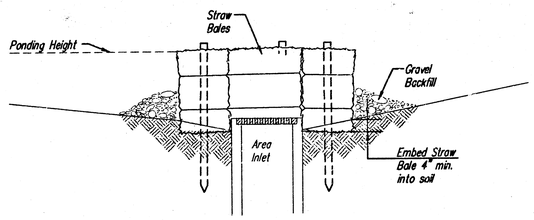

SECTION A-A

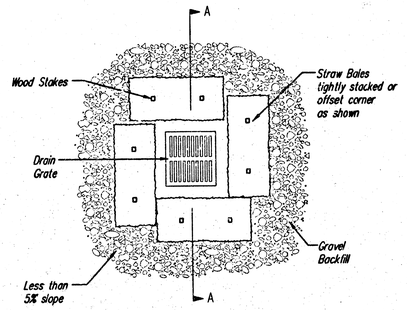

STRAW BALE BARRIERS FOR AREA INLETS
(INLET PROTECTION)

Material Specification:

Bale area inlet barriers should be constructed of wheat straw, oat straw, prairie hay, or bromegrass hay that is free of weeds declared noxious by the Kansas State Board of Agriculture.
The stakes used to anchor the bales should be a hardwood material with the following minimum dimensions: 2" square (nominal) by 4' long.

Placement:

Bale area inlet barriers should be placed directly around the perimeter of an inlet.
When a bale area inlet barrier is located near an inlet that has steep approach slopes, the storage capacity behind the barrier is drastically reduced. Timely removal of sediment must occur for a barrier to operate properly in this location.

Proper Installation Method:

Excavate a trench around the perimeter of the area inlet that is at least 4" deep by a bale's width wide.
Place the bales in the trench, making sure that they are butted tightly. Some bales may need to be shortened to fit into the trench around the area inlet. Two stakes should be driven through each bale, approximately 6" to 8" in from the bale ends.
Stakes should be driven at least 12" into the ground.
Once all the bales have been installed and anchored, place the excavated soil against the receiving side of the barrier and compact it. The compacted soil should be no more than 3" to 4" deep.
Note: When a bale area inlet barrier is placed in a shallow median ditch, make sure that the top of the barrier is not higher than the paved road. In this configuration, water may spread onto the roadway causing a hazardous condition.

List of common placement installation mistakes to avoid:

Bales should be placed directly against the perimeter of the area inlet. This allows overtopping water to flow directly into the inlet instead of onto nearby soil causing scour.
Bale area inlet barriers must be dug into the ground. Bales at ground level do not work because they allow water to flow under the barrier.

Inspection and Maintenance:

Bale area inlet barriers should be inspected every 7 days and within 24 hours of a rainfall 1/2" or more. The following is a list of questions that should be addressed during each inspection:

Does water flow under the area inlet barrier?
Does water flow through spaces between abutting bales?
Are any bales dislodged?
Are bales decomposing due to age and/or water damage?
Does sediment need to be removed from behind the area inlet barrier?

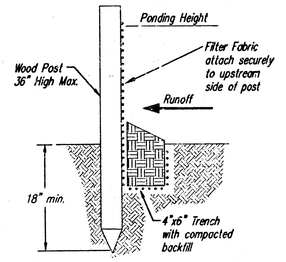

SILT FENCE BARRIERS

SILT FENCE BARRIERS

Material Specification:

Silt fence fabric should conform to the AASHTO M288 96 silt fence specification.
The posts used to support the silt fence fabric should be a hardwood material with the following minimum dimensions: 2" square (nominal) by 4' long.
Silt fence fabric should be attached to the wooden posts with staples, wire, zip ties, or nails.

Placement:

A slope barrier should be used at the toe of a slope when a ditch does not exist. The slope barrier should be placed on nearly level ground 5' to 10' away from the toe of a slope. The barrier is placed away from the toe of the slope to provide adequate storage for settling out sediment.
When practicable, silt fence slope barriers should be placed along contours to avoid a concentration of flow.
Silt fence slope barriers can also be placed along right-of-way fence lines to keep sediment from crossing onto adjacent property. When placed in this manner, the slope barrier will not likely follow contours.

Proper installation method:

Excavate a trench the length of the planned slope barrier that is 6" deep by 4" wide.
Make sure that the trench is excavated along a single contour. When practicable, slope barriers should be placed along contours to avoid a concentration of flow. Place the soil on the upslope side of the trench for later use.
Roll out a continuous length of silt fence fabric on the downslope side of the trench.
Place the edge of the fabric in the trench starting at the top upslope edge. Line all three sides of the trench with the fabric. Backfill over the fabric in the trench with the excavated soil and compact. After filling the trench, approximately 24" to 36" of silt-fence fabric should remain exposed.
Lay the exposed silt fence upslope of the trench to [illegible] for driving in the posts.
Just downslope of the trench, drive posts into the ground to a depth of at least 18".
Place posts no more than 4' apart.
Attach the silt fence to the anchored post with staples, wire, zip ties, or nails.

List of common placement/installation mistakes to avoid:

When practicable, do not place silt fence slope barriers across contours. Slope barriers should be placed along contours to avoid a concentration of flow. When the flow concentrates, it overtops the barrier and the silt fence slope barrier quickly deteriorates.
Do not place silt-fence posts on the upslope side of the silt fence fabric. In this configuration, the force of the water is not restricted by the posts, but only by the staples (wire, zip ties, nails, etc.). The silt fence will rip and fail.
Do not place silt fence slope barriers in areas with shallow soils underlain by rock. If the barrier is not sufficiently anchored, it will wash out.
Silt fence slope barriers must be dug into the ground-silt fence at ground level does not work because water will flow underneath.

Inspection and Maintenance:

Silt fence slope barriers should be inspected every 7 days and within 24 hours of a rainfall of 1/2" or more. The following is a list of questions that should be addressed during each inspection:

Are there any points along the slope barrier where water is concentrating?
Does water flow under the slope barrier?
Do the silt fences sag excessively?
Has the silt fence torn or became detached from the posts?
Does sediment need to be removed from behind the slope barrier?

CITY OF WICHITA

SOIL EROSION BMP DETAILS

CHRISTOPHER M. CARRIER, P.E.
STORM WATER ENGINEER

PROJECT NUMBER	OCA NO.
1564 PPS	607861
DATE: MAY 2005	SHEET 3 OF 8

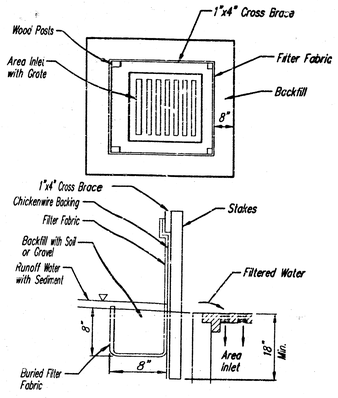

SILT FENCE BARRIERS FOR AREA INLETS
(INLET PROTECTION)

Material Specification:

Silt fence fabric should conform to the AASHTO M288 96 silt fence specification.
The wire or polymeric mesh backing used to help support the silt fence fabric should conform to the AASHTO M288 96 silt fence specification.
The posts used to support the silt fence fabric should be a hardwood material with the following minimum dimensions: 2" square (nominal) by 4' long.
The material used to frame the tops of the posts should be 1" by 4" boards.
Silt fence fabric and support backing should be attached to the wooden posts and frame with staples, wire, zip ties, or nails.

Placement:

Place a silt fence drop inlet barrier in a location where it is unlikely to be overtopped.
Water should flow through silt fence, not over it. Silt fence barriers for area inlets often fail when repeatedly overtopped.
When used as a barrierfor area inlets, silt fence fabric and posts must be supported at the top by a wooden frame.
When a silt fence barrier for area inlets is located near an inlet that has steep approach slopes, the storage capacity behind the barrier is drastically reduced. Timely removal of sediment must occur for a barrier to operate properly in this location.

Proper installation method:

Excavate a trench around the perimeter of the area inlet that is at least 8" deep by 8" wide.
Drive posts to a depth of at least 18" around the perimeter of the area inlet.
The distance between posts should be 4' or less. If the distance between two adjacent corner posts is more than 4', add another post(s) between them.
Connect the tops of all the posts with a wooden frame made of 1" by 4" boards. Use nails or screws for fastening.
Attach the wire or polymeric-mesh backing to the outside of the post/frame structure with staples, wire, zip ties, or nails.
Roll out a continuous length of silt fence fabric long enough to wrap around the perimeter of the area inlet. Add more length for overlapping the fabric joint. Place the edge of the fabric in the trench, starting at the outside edge of the trench. Line all three sides of the trench with the fabric. Backfill over the fabric in the trench with the excavated soil and compact. After filling the trench, approximately 24" to 36" of silt fence fabric should remain exposed.
Attach the silt fence to the outside of the post/frame structure with staples, wire, zip ties, or nails. The joint should be overlapped to the next post.

Note: When a silt fence barrier for area inlet is placed in a shallow median ditch, make sure that the top of the barrier is not higher than the paved road. In this configuration, water may spread onto the roadway causing a hazardous condition.

List of common placement/installation mistakes to avoid:

Water should flow through a silt fence barrier for area inlet-not over it. Place a silt fence barrier for area inlet in a location where it is unlikely to be overtopped. Silt fence barrier for area inlets often fail when repeatedly overtopped.
Do not place posts on the outside of the silt fence barrier for area inlet. In this configuration, the force of the water is not resisted by the posts, but only by the staples (wire, zip-ties, nails, etc.). The silt fence will rip and fail.
Do not install silt fence barrier for area inlets without framing the top of the posts.
The corner posts around area inlets are stressed in two directions whereas a normal silt fence is only stressed in one direction. This added stress requires more support.

Inspection and Maintenance:

Silt fence barrier for area inlets should be inspected every 7 days and within 24 hours of a rainfall of 1/2" or more. The following is a list of questions that should be addressed during each inspection:

Does water flow under the silt fence?
Does the silt fence sag excessively?
Has the silt fence torn or become detached from the posts?
Does sediment need to be removed from behind the area inlet barrier?

NOTE: Point A must be higher than Point B so that water flows over the bales and not around them.

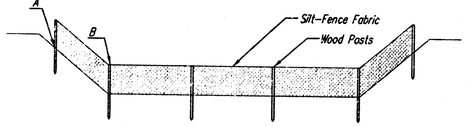

ELEVATION

SILT FENCE DITCH CHECKS
(STREAM PROTECTION)

Material Specification:

Silt fence fabric should conform to the AASHTO M288 96 silt fence specification.
The posts used to support the silt fence fabric should be a hardwood material with the following minimum dimensions: 2" square (nominal) by 4' long.
Silt fence fabric should be attached to the wooden posts with staples, wire, zip ties, or nails.

Placement:

Place silt fence in ditches where it is unlikely that it will be overtopped.
Water should flow through a silt fence ditch check, not over it. Silt fence ditch checks often fail when overtopped.
Silt fence ditch checks should be placed perpendicular to the flowline of the ditch.
The silt fence should extend for enough so that the ground level at the ends of the fence is higher than the top of the low point of the fence. This prevents water from flowing around the check.
Checks should not be placed in ditches where high flows are expected. Rock checks should be used instead.
Silt fence should be placed in ditches with slopes of 6% or less. For slopes steeper than 6% rock checks should be used.

The following table provides check spacing for a given ditch grade:

Ditch grade (%)	Check Spacing (feet)
0.5	200
1.0	200
2.0	100
3.0	65
4.0	50
5.0	40
6.0	30

Proper installation method:

Excavate a trench perpendicular to the ditch flowline that is at least 12" deep by 6" wide.
Extend the trench in a straight line along the entire length of the proposed ditch check.
Place the soil on the upstream side of the trench for later use.
Roll out a continuous length of silt fence fabric on the downstream side of the trench.
Place the edge of the fabric in the trench starting at the top upstream edge of the trench.
Line two sides of the trench with the fabric as shown on detail. Backfill over the fabric in the trench with the excavated soil and compact. After filling the trench, approximately 24" to 36" of silt fence fabric should remain exposed.
Lay the exposed silt fence on the upstream side of the trench to clear an area for driving in the posts. Just downstream of the trench, drive posts into the ground to a depth of at least 24". Place posts no more than 4' apart.
Attach the silt fence to the anchored post with staples, wire, zip ties, or nails.

List of common placement/installation mistakes to avoid:

Water should flow through a silt fence ditch check-not over it. Place silt fence in ditches where it is unlikely that it will be overtopped. Silt fence installations quickly deteriorate when water overtops them.
Do not place silt fence posts on the upstream side of the silt fence fabric. In this configuration, the force of the water is not restricted by the posts, but only by the staples (wire, zip ties, nails, etc.) The silt fence will rip and fail.
Do not place a silt fence ditch check directly in front of a culvert outlet. It will not stand up to the concentrated flow.
Do not place silt fence ditch checks in ditches that will likely experience high flows. They will not stand up to concentrated flow.
Follow prescribed ditch check spacing guidelines. If spacing guidelines are exceeded, erosion will occur between the ditch checks.
Do not allow water to flow around the ditch check. Make sure that the ditch check is long enough so that the ground level at the ends of the fence is higher than the low point on the top of the fence.
Do not place silt fence ditch checks in channels with shallow soils underlain by rock. If the check is not anchored sufficiently, it will wash out.

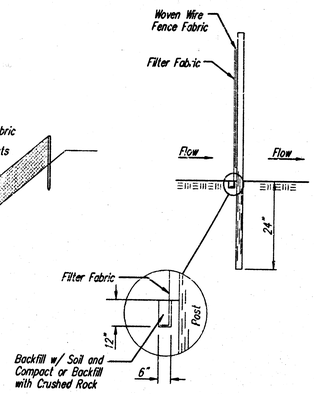

ANCHOR TRENCH DETAIL

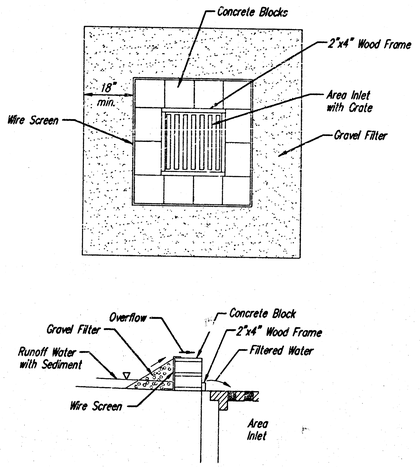

CONCRETE BLOCK FILTER FOR AREA DRAIN
(INLET PROTECTION)

Gravel barriers provide little filtering of large inflow waters. However, when installed correctly and maintained, they can effectively treat low runoff flows.

Placement of gravel filters around area drains must be completed in a manner that will not cause local flooding.

Gravel filters can be used if the immediate and adjacent area to the area drain consists of soil or pavement.

Only gravel filters are to be installed on top of the pavement.

Instructions for Installing:

STEP 1: Place concrete blocks around the grate. The blocks can be stacked one or two high and should be supported by a 2"x4" board.
STEP 2: Wrap 1/2" mesh wire screen around the concrete blocks.
STEP 3: Place 1" to 1-1/2" diameter rock around the blocks and wire screen. Be sure the rock extends down from the top of the concrete block.
STEP 4: To prevent damage to vehicles, signs warning drivers about the structures may be necessary.

An alternative method is use of gravel bags that are supported to prevent collapsing.

Use of rock having diameters smaller than 1" may result in clogging of pores and reduce the amount of water flowing into an inlet.

Maintenance:

All gravel filters installed around area drains should be inspected and repaired after each runoff event. Sediment should be removed when material is within 3" of the top of any block. Periodically, the gravel should be raked to increase infiltration and filtering of runoff waters. Accumulated sediment is to be removed immediately from roads and streets after every runoff event.

Inspection and Maintenance:

Silt fence ditch checks should be inspected every 7 days and within 24 hours of a rainfall of 1/2" or more. The following is a list of questions that should be addressed during each inspection:

Does water flow around the ditch check?
Does water flow under the ditch check?
Does the silt fence sag excessively?
Has the silt fence torn or become detached from the posts?
Does sediment need to be removed from behind the ditch check?

CITY OF WICHITA

SOIL EROSION BMP DETAILS

CHRISTOPHER M. CARRIER, P.E.
STORM WATER ENGINEER

PROJECT NUMBER	OCA NO.
1564 PPS	607861
DATE	SHEET 4 OF 8
MAY 2005	

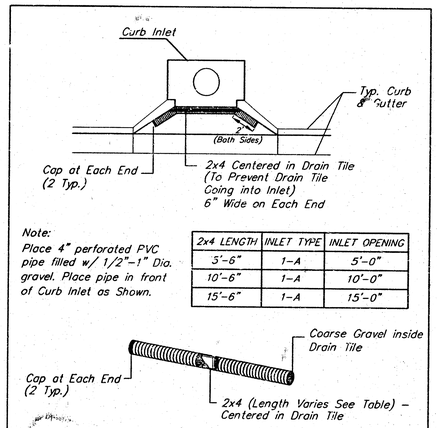

Note:
Place 4" perforated PVC pipe filled w/ 1/2"-1" Dia. gravel. Place pipe in front of Curb Inlet as Shown.

2x4 LENGTH	INLET TYPE	INLET OPENING
5'-6"	1-A	5'-0"
10'-6"	1-A	10'-0"
15'-6"	1-A	15'-0"

CURB INLET PROTECTION
4" Perforated Pipe w/ Gravel

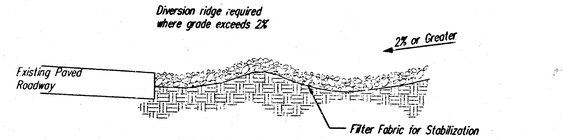

SECTION C-C

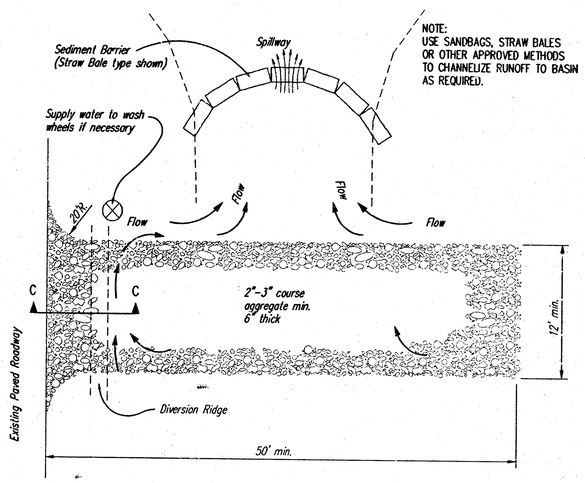

STABILIZED CONSTRUCTION ENTRANCE

NOTES:

1. THE ENTRANCE SHALL BE MAINTAINED IN A CONDITION THAT WILL PREVENT TRACKING OR FLOWING OF SEDIMENT ONTO PUBLIC RIGHTS-OF-WAY. THIS MAY REQUIRE TOP DRESSING, REPAIR AND/OR CLEANOUT OF ANY MEASURES USED TO TRAP SEDIMENT.
2. WHEN NECESSARY, WHEELS SHALL BE CLEANED PRIOR TO ENTRANCE ONTO PUBLIC RIGHT-OF-WAY.
3. WHEN WASHING IS REQUIRED, IT SHALL BE DONE ON AN AREA STABILIZED WITH CRUSHED STONE THAT DRAINS INTO AN APPROVED SEDIMENT TRAP OR SEDIMENT BASIN, AS SHOWN ABOVE.
4. DRIVE ENTRANCES ONTO RESIDENTIAL LOTS WILL NOT BE REQUIRED TO HAVE THE SEDIMENT BARRIER SHOWN, BUT WHEEL WASHING MAY BE REQUIRED IF STABILIZED ENTRANCE IS NOT SUFFICIENT TO KEEP MUD FROM BEING TRACKED ONTO ADJACENT STREET. ENTRANCE SHALL EXTEND FROM BACK OF CURB TO DWELLING.

CITY OF WICHITA

SOIL EROSION BMP DETAILS

CHRISTOPHER M. CARRIER, P.E.
STORM WATER ENGINEER

PROJECT NUMBER	OCA NO.
1564 PPS	607861
DATE: MAY 2005	SHEET 5 OF 8

PHASE 1 – INITIAL EARTHWORK AND UTILITIES (EXCEPT STORM SEWER)

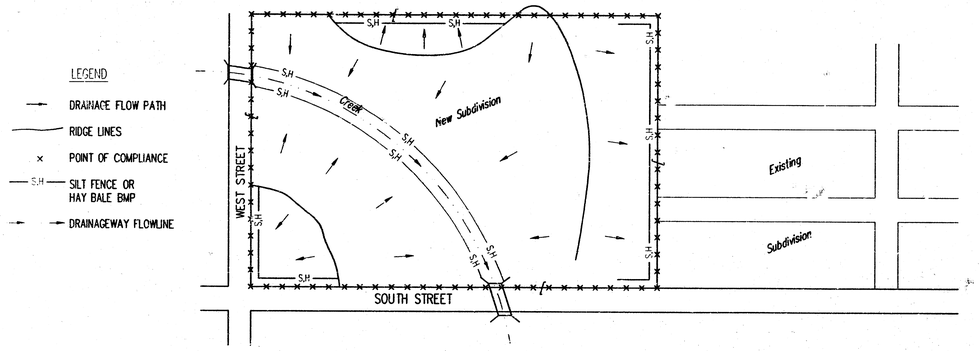

1. DURING THIS PHASE OF SUBDIVISION CONSTRUCTION, THE POINTS OF COMPLIANCE ARE THE PERIMETER BOUNDARIES AND ANY DRAINAGE WAYS OR STORM SEWERS DRAINING THROUGH OR FROM THE SITE. SHOULD LAKES BE CONSTRUCTED WITHIN THE SUBDIVISION THAT WILL DISCHARGE DURING STORMS, THEY ARE ALSO A POINT OF COMPLIANCE.
2. HAYBALES OR SILT FENCE MUST BE CONSTRUCTED ALONG THE PROPERTY LINE WHERE ON SITE WATER CAN DRAIN OFF THE PROPERTY. THESE BMP'S WILL ALSO BE INSTALLED ALONG ANY DRAINAGE DITCH OR LAKE THAT CAN DISCHARGE.
3. SHOULD SILT OR SEDIMENT ENTER THE DITCHES OR GUTTERLINES ON THE ADJACENT BOUNDRY STREETS, APPROPRIATE BMP'S WILL BE PLACED WITHIN THE SUBDIVISION TO PREVENT THIS.
4. ANY MUD TRACKED ONTO ADJACENT STREETS WILL BE REMOVED AT THE END OF EACH WORK DAY.
5. CONTRACTORS WORKING WITHIN THE SITE WILL NOT BE REQUIRED TO USE INDIVIDUAL BMP'S AS LONG AS THOSE SPECIFIED ABOVE ARE IN PLACE AND EFFECTIVE. CONTRACTORS WORKING ON THE BOUNDRY LINE STREETS OR ON ADJACENT PROPERTIES TO EXTEND UTILITIES ARE EXPECTED TO USE BMP'S AT THEIR WORK LOCATIONS, AS NEEDED.
6. UTILIZE STABILIZED CONSTRUCTION ENTRANCE AT ENTRANCE AND EXIT ONTO ANY EXISTING PUBLIC STREETS.
7. THE SUBDIVISION DEVELOPER (OWNER) SHALL INSTALL AND MAINTAIN THE ON-SITE BMP'S.

PHASE 3 – STREET CONSTRUCTION

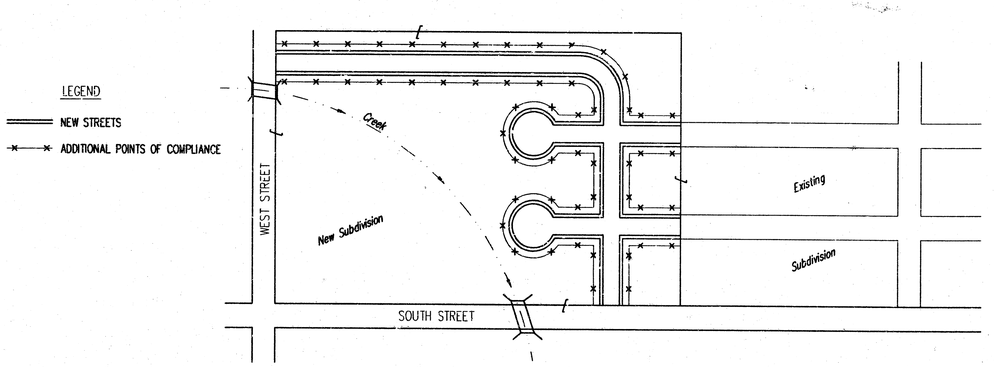

1. DURING THIS PHASE OF SUBDIVISION CONSTRUCTION, NEW STREETS ARE INSTALLED. ALL BMP'S INSTALLED DURING PHASE 1 AND 2 MUST STILL BE MAINTAINED. THE POINT OF COMPLIANCE NOW SHIFTS TO THE BACK OF CURB ALONG EACH STREET.
2. CURB OPENING INLET PROTECTION:
   A. SUMP AREAS – INLET PROTECTION SHALL BE PROVIDED WHEN STREET SUBGRADE WORK IS COMPLETED.
   B. NON-SUMP LOCATIONS – PROVIDE INLET PROTECTION AS SOON AS BASE COURSE ASPHALT IS INSTALLED, BEFORE THE SURFACE COURSE LIFT.
3. BMP'S WILL BE REQUIRED BACK OF CURB WHEREVER WATER CAN FLOW OVER THE CURB AND THE CURB HAS BEEN BACKFILLED TO WITHIN 3" OR LESS OF THE TOP OF CURB (SEE CURB BACKFILL DETAIL). FOR CURBS NOT YET ENTIRELY BACKFILLED (3" OR MORE BELOW TOP OF CURB), BMP'S WILL BE REQUIRED AT POINTS WHERE WATER BREAKS OVER CURB WHICH COULD RESULT IN THE PLACEMENT OF SEDIMENT IN THE GUTTER.
4. SEE DETAIL THIS SHEET ON BACK OF CURB PROTECTION.
5. THE BACK OF CURB PROTECTION SPECIFIED ON THIS PLAN MAY HAVE TO BE SUPPLIMENTED WITH HAYBALE OR SILT FENCE BMP'S AT LOCATIONS WHERE CONCENTRATED FLOW RESULTS IN SEDIMENT BEING CARRIED OVER THE EXCELSIOR MATS.
6. THE STREET CONTRACTOR WILL BE RESPONSIBLE FOR INSTALLING BACK OF CURB BMP'S.
7. THE INDIVIDUAL LOT OWNERS WILL BE RESPONSIBLE FOR MAINTAINING THE BACK OF CURB BMP'S IN FRONT OF THEIR LOTS UNTIL SUCH TIME AS ADJACENT DISTURBED EARTH IS STABILIZED WITH GRASS OR SOD.

PHASE 2 – INSTALLATION OF STORM SEWER

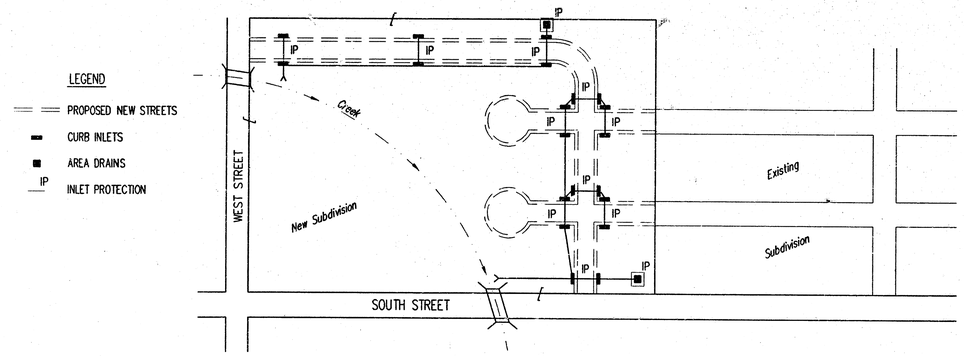

1. DURING THIS PHASE OF SUBDIVISION DEVELOPMENT, ALL BMP'S REQUIRED IN PHASE 1 SHALL REMAIN IN PLACE AND BE MAINTAINED.
2. AS NEW STORM SEWERS, WITH INLETS, ARE INSTALLED, THE STORM SEWERS MUST NOW BE PROTECTED SO ALL NEW INLETS BECOME POINTS OF COMPLIANCE.
3. AREA DRAINS – AS SOON AS WATER CAN FLOW INTO THESE DRAINS, HAYBALE OR SILT FENCE PROTECTION WILL BE INSTALLED AROUND THEM.
4. CURB OPENING INLETS – AS SOON AS WATER CAN FLOW INTO THESE DRAINS, INLET PROTECTION BMP'S MUST BE INSTALLED. SEE PHASE 3 – STREET CONSTRUCTION.
5. THE STORM SEWER CONTRACTOR WILL BE RESPONSIBLE FOR INSTALLING THESE BMP'S. IF WATER CANNOT FLOW INTO CURB INLETS UNTIL STREET CONSTRUCTION IS COMPLETE, THEN STREET CONTRACTOR WILL INSTALL INLET PROTECTION.
6. THE SUBDIVISION DEVELOPER WILL MAINTAIN THESE BMP'S ONCE INSTALLED.
7. ONCE ALL DISTURBED GROUND DRAINING TO AN INLET HAS BEEN RESTABILIZED WITH GRASS OR SOD, THE SUBDIVISION DEVELOPER WILL BE RESPONSIBLE FOR PERMANENTLY REMOVING THE INLET PROTECTION.

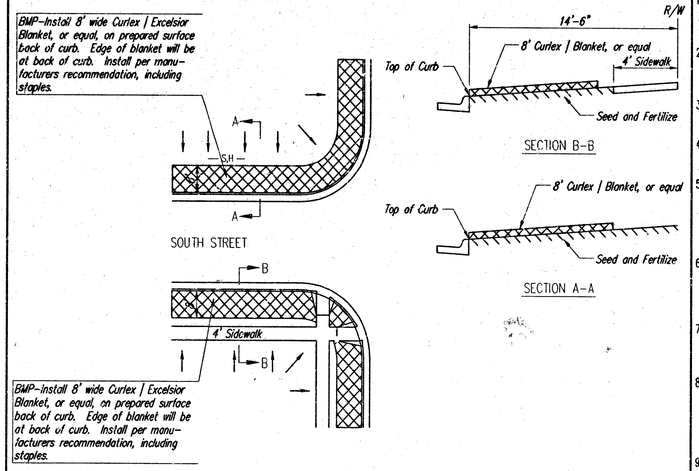

BACK OF CURB PROTECTION DETAIL

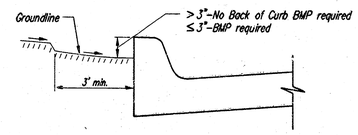

CURB BACKFILL DETAIL

GENERAL NOTES:

1. THE INTENT OF ALL BEST MANAGEMENT PRACTICES (B.M.P.'S) IS TO PREVENT ERODED SOIL FROM ENTERING DITCHES, STORM SEWERS, OR ANY OTHER DRAINAGE FEATURE.
2. THIS SHEET IS INTENDED TO PROVIDE GUIDELINES AS TO WHAT TYPE OF BMP'S WILL BE INSTALLED DURING THE CONSTRUCTION PROCESS. CONTRACTORS ARE EXPECTED TO BID PROJECTS ACCORDINGLY.
3. BMP'S SHALL BE MAINTAINED DURING THE CONSTRUCTION PROCESS TO REMAIN EFFECTIVE. MAINTENANCE SHALL BE AS INDICATED ON THE BMP DETAIL SHEETS.
4. PERSONS DESTROYING BMP'S SHALL BE RESPONSIBLE FOR IMMEDIATELY REPAIRING THEM OR INSTALLING SUITABLE REPLACEMENT BMP'S.
5. THE DEVELOPMENT OF ANY SUBDIVISION THAT DISTURBS 5 ACRES OR MORE WILL REQUIRE A FEDERAL/STATE NPDES STORMWATER PERMIT. THE PREPARATION OF A STORMWATER POLLUTION PREVENTION PLAN IS REQUIRED. EROSION CONTROL BMP'S ARE REQUIRED. THE DETAILS SHOWN ON THIS SHEET ARE THE MINIMUM STANDARDS TO BE SHOWN ON POLLUTION PREVENTION PLAN.
6. FOR SUBDIVISIONS SMALLER THAN 5 ACRES, SOIL EROSION BMP'S ARE REQUIRED. ALSO, DEVELOPERS AND CONTRACTORS ARE ENCOURAGED TO DEVELOP POLLUTION PREVENTION PLANS FOR EACH PROJECT PRIOR TO CONSTRUCTION.
7. FAILURE TO USE AND MAINTAIN BMP'S IS A VIOLATION OF SECTION 16.32 OF THE CITY CODE AND WILL SUBJECT THE SUBDIVISION DEVELOPER AND CONTRACTORS TO THE PENALTIES PROVIDED THEREIN.
8. THE APPLICATION OF BMP'S SHOWN ON THIS SHEET IS FOR SITUATIONS NORMALLY ENCOUNTERED. FROM TIME TO TIME, SITUATIONS WILL ARISE THAT MAY REQUIRE A DIFFERENT BMP OTHER THAN THAT SHOWN. BMP'S, OTHER THAN THOSE SHOWN, MAY BE UTILIZED SO LONG AS THEY ARE EFFECTIVE AND MAINTAINED.
9. A STABILIZED EARTH SURFACE IS DEFINED AS ONE THAT IS HARD SURFACED WITH CONCRETE, ASPHALT, OR THE LIKE, OR ONE ON WHICH 70% OF THE GRASS HAS GERMINATED ON THE ENTIRE SURFACE.

CITY OF WICHITA

SOIL EROSION BMPS SUBDIVISION DEVELOPMENT PROCESS

CHRISTOPHER M. CARRIER, P.E.
STORM WATER ENGINEER

PROJECT NUMBER	OCA NO.
1564 PPS	607861
DATE: MAY 2005	SHEET 6 OF 8

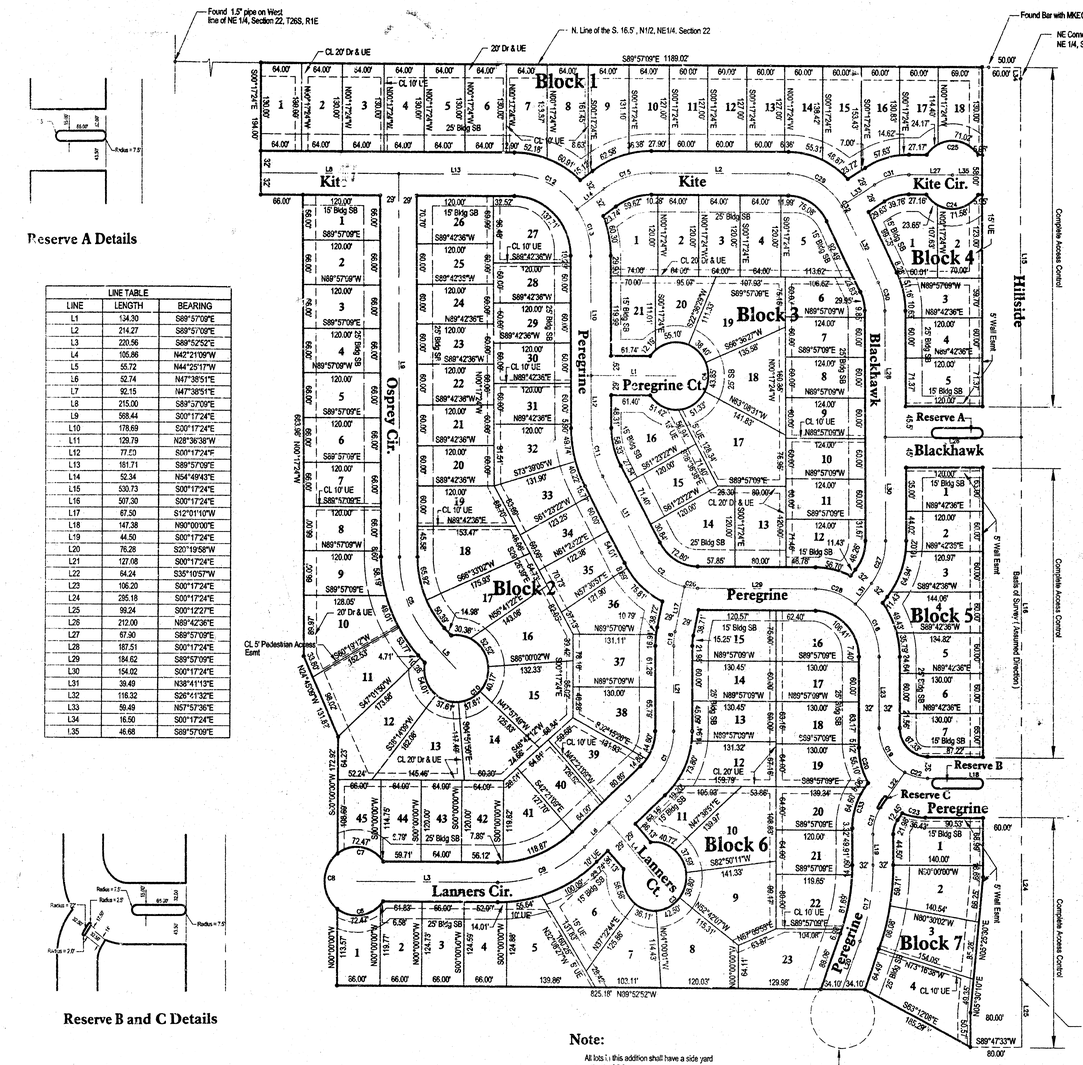

Reserve A Details

LINE TABLE		
LINE	LENGTH	BEARING
L1	134.30	S89°57'09"E
L2	214.27	S89°57'09"E
L3	220.56	S88°52'52"E
L4	105.86	N42°21'09"W
L5	55.72	N44°25'17"W
L6	52.74	N47°38'51"E
L7	92.15	N47°38'51"E
L8	215.00	S89°57'09"E
L9	568.44	S00°17'24"E
L10	178.69	S00°17'24"E
L11	129.79	N28°36'38"W
L12	77.03	S00°17'24"E
L13	161.71	S89°57'09"E
L14	52.34	N54°49'43"E
L15	530.73	S00°17'24"E
L16	507.30	S00°17'24"E
L17	67.50	S12°01'10"W
L18	147.38	N90°00'00"E
L19	44.50	S00°17'24"E
L20	76.28	S20°19'58"W
L21	127.08	S00°17'24"E
L22	64.24	S35°10'57"W
L23	106.20	S00°17'24"E
L24	295.18	S00°17'24"E
L25	99.24	S00°12'27"E
L26	212.00	N89°42'36"E
L27	67.90	S89°57'09"E
L28	187.51	S00°17'24"E
L29	184.62	S89°57'09"E
L30	154.02	S00°17'24"E
L31	39.49	N38°41'13"E
L32	116.32	S26°41'32"E
L33	59.49	N57°57'36"E
L34	16.50	S00°17'24"E
L35	46.68	S89°57'09"E

Reserve B and C Details

Note:

All lots 1, this addition shall have a side yard setback of 5 feet.

FALCON FALLS ADDITION

to Wichita, Sedgwick County, Kansas

STATE OF KANSAS, COUNTY OF SEDGWICK: ss.

I, Kenny E. Hill, being a duly licensed Land Surveyor in said County and State, do hereby certify that the survey and platting of "FALCON FALLS ADDITION to Wichita, Kansas, was completed under my direct supervision, said plat being described as follows:

Beginning at the Southeast corner of the Northeast Quarter of Section 22, Township 26 South, Range 1 East of the 6th P.M., Sedgwick County, Kansas; thence S00°17'27"E for a distance of 99.24 feet; thence S89°47'33"W for a distance of 80.00 feet; thence N63°12'06"W for a distance of 185.29 feet; thence N89°52'52"W for a distance of 825.18 feet; thence N30°00'00"W for a distance of 113.57 feet; thence Northwesterly on a non-tangent circular curve lying West of a 80.74 foot chord bearing N00°00'00"E, having a radius of 50.00 feet and a central angle of 107°41'00" for an arc distance of 93.97 feet; thence N00°00'00"E for a distance of 172.92 feet; thence N24°45'09"W for a distance of 131.82 feet; thence N00°17'24"W for a distance of 683.98 feet; thence N89°57'09"W for a distance of 66.00 feet; thence N00°17'24"W for a distance of 194.00 feet; thence S89°57'09"E for a distance of 1189.02 feet; thence S00°17'24"E for a distance of 16.50 feet to the Northeast corner of the South Half of said Northeast Quarter; thence on an assumed bearing of S00°17'24"E for a distance of 1333.21 feet to the point of beginning, subject to road right-of-way.

The accompanying plat is a true and correct exhibit of property surveyed.

Dated this 26TH day of NOVEMBER 2002.

Poe and Associates of Kansas, Inc.

Kenny E. Hill, L.S. 984
Vice President

KENNY E. HILL — LICENSED — LS-984 — 11-26-02 — KANSAS — LAND SURVEYOR

KNOW ALL MEN BY THESE PRESENTS:

That we, the undersigned, have caused the land described in the Surveyor's Certificate to be platted into lots, blocks, streets and reserves. The streets are hereby dedicated to and for the use of the public. Easements are hereby granted as indicated for the construction and maintenance of walls, drainage and utilities. Reserve A, B and C shall be reserved for, entry monuments, lighting, landscaping and utilities. All reserves are to be owned and maintained by a home owners association its successors and assigns. A drainage plan has been developed for the plat and all drainage easements, rights-of-way and reserves shall remain at established grades or modified with the approval of the applicable City or County Engineer, and remain unobstructed to allow for the conveyance of stormwater. All abutters rights of access to or from Hillside over and across the East line of Blocks 1, 4, 5 and 7 are hereby granted to the City of Wichita. Vacation of the temporary turnaround easement, located on the south line of this addition at the end of Peregrine, shall be effective upon the extension of the street to the south.

Heights, LLC

Jay W. Russell, Managing Member

STATE OF KANSAS, COUNTY OF SEDGWICK: ss.

This instrument was acknowledged before me on this 6th, day of Dec., 2002, by Jay W. Russell, Managing Member of Heights, LLC.

CAROL R. BARNES — Notary Public - State of Kansas — My Appt. Expires 4-25-2004

Notary Public
CAROL R. BARNES

My Appointment Expires: 4/25/2004

KNOW ALL MEN BY THESE PRESENTS: ss

That, the Chisholm Trail State Bank, holders of a mortgage on the property described in the Surveyor's Certificate, do hereby consent to the plat of Falcon Falls Addition.

Chisholm Trail State Bank

Elmer S. Peters, Jr., Executive Vice President

This instrument was acknowledged before me on this 5TH, day of DEC., 2002, by Elmer S. Peters, Jr., Executive Vice President of Chisholm Trail State Bank.

MELISSA J. BLUML — Notary Public in Stafford Kansas — My Appt. Expires 9-15-04

Notary Public
MELISSA J. BLUML

My Appointment Expires:

This plat of FALCON FALLS ADDITION to Wichita, Kansas has been submitted to and approved by this WICHITA-SEDGWICK COUNTY METROPOLITAN AREA PLANNING COMMISSION, Wichita, Kansas.

Dated this 21ST, day of NOVEMBER, 2002.

WICHITA SEDGWICK COUNTY
METROPOLITAN AREA PLANNING
COMMISSION

Bernard A. Hentzen, Chair

Dale Miller, Secretary

Reviewed in accordance with K.S.A. 58-2005 on this 3RD day of DECEMBER, 2002.

TRAVIS L. ROBERTS — LS-1246 — KANSAS — LAND SURVEYOR

Travis L. Roberts, L.S. #1246
Deputy County Surveyor
Sedgwick County, Kansas

This plat approved and all dedications shown hereon accepted by the City Council of the City of Wichita, Kansas, this 10TH day of Jan. 2003.

At the Direction of the City Council

Chris Sherbon, City Manager

Pat Graves, City Clerk

Entered on transfer record this 14TH, day of JANUARY, 2003.

Don Brace, County Clerk

This is to certify that this instrument was filed for record in the Register of Deeds Office at 9:30 A.M.-P.M. on the 15TH, day of January, 2003.

2163435

Bill Mesa, Register of Deeds

Linda Kizzire, Chief Deputy

CURVE TABLE						
CURVE	LENGTH	RADIUS	TANGENT	CHORD	BEARING	DELTA
C1	83.67	100.00	44.46	81.25	N23°40'44"E	47°56'19"
C2	86.17	100.00	45.96	83.53	S53°17'44"E	49°22'12"
C3	252.29	50.00	35.60	58.00	N47°38'51"E	288°05'56"
C4	252.29	50.00	35.60	58.00	N00°02'51"E	288°05'56"
C5	138.64	180.00	72.96	135.24	S22°21'20"E	44°07'52"
C6	79.05	30.00	50.52	71.07	N80°51'50"E	90°35'20"
C7	79.26	50.00	50.73	71.22	N80°44'42"W	90°48'36"
C8	93.97	50.00	68.42	80.74	S00°00'00"W	107°41'00"
C9	148.25	200.00	77.7	144.88	N68°53'00"E	42°28'17"
C10	252.29	50.00	35.60	58.00	N45°34'43"E	288°05'56"
C11	14.14	150.00	37.85	73.38	S14°27'01"E	28°19'14"
C12	114.73	120.00	62.18	110.41	N82°33'43"W	54°46'53"
C13	73.06	123.00	37.70	71.93	N17°43'50"W	34°52'33"
C15	79.29	129.00	40.94	78.05	S72°28'17"W	35°13'07"
C16	89.05	100.00	47.72	86.14	N25°48'06"W	51°01'23"
C17	114.28	317.50	57.77	113.68	N10°01'17"E	20°37'22"
C18	21.48	100.00	10.78	21.44	S05°51'53"W	12°18'34"
C19	81.18	75.00	45.08	77.28	S31°17'57"E	62°01'06"
C20	55.10	104.00	28.21	54.46	S15°28'02"E	30°21'16"
C21	41.79	67.50	21.59	41.13	S17°28'47"W	35°28'21"
C22	36.25	75.00	18.49	35.90	S76°18'15"E	27°41'30"
C23	36.43	104.00	18.41	36.25	S79°57'49"E	20°04'21"
C24	95.23	50.00	70.25	81.47	S89°57'09"E	109°07'11"
C25	95.19	50.00	70.20	81.45	N89°57'09"W	109°04'41"
C26	20.90	100.00	10.49	20.86	S83°58'00"E	11°58'19"
C27	68.03	100.00	35.39	66.72	N13°11'54"E	38°58'37"
C28	67.44	100.00	35.06	66.17	N10°37'58"W	38°38'22"
C29	101.38	100.00	55.33	96.83	N80°59'47"W	57°54'45"
C30	44.70	97.00	22.75	44.30	N13°29'28"W	26°24'08"
C31	56.00	100.00	28.76	55.27	S74°00'13"W	32°05'15"
C32	9.33	100.00	4.67	9.33	N29°21'58"W	05°20'53"
C33	72.66	104.50	37.87	71.20	N19°37'41"E	39°50'11"

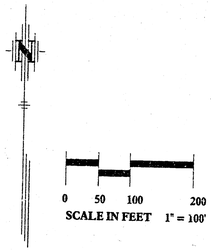

LEGEND

Utility Easement	20' UE
Drainage Easement	20' Dr E
Iron Set	
Building Setback	25' Bldg SB
Curve Label	C2
Line Label	L2
Center Line	CL

POE and ASSOCIATES OF KANSAS, INC.
CONSULTING ENGINEERS
8941 E. Central, Suite 200 ■ Wichita, KS 67206 ■ 316/685-4174 ■ Fax 316/685-4144

PC143-10

FALCON FALLS 2ND ADDITION
WICHITA, SEDGWICK COUNTY, KANSAS

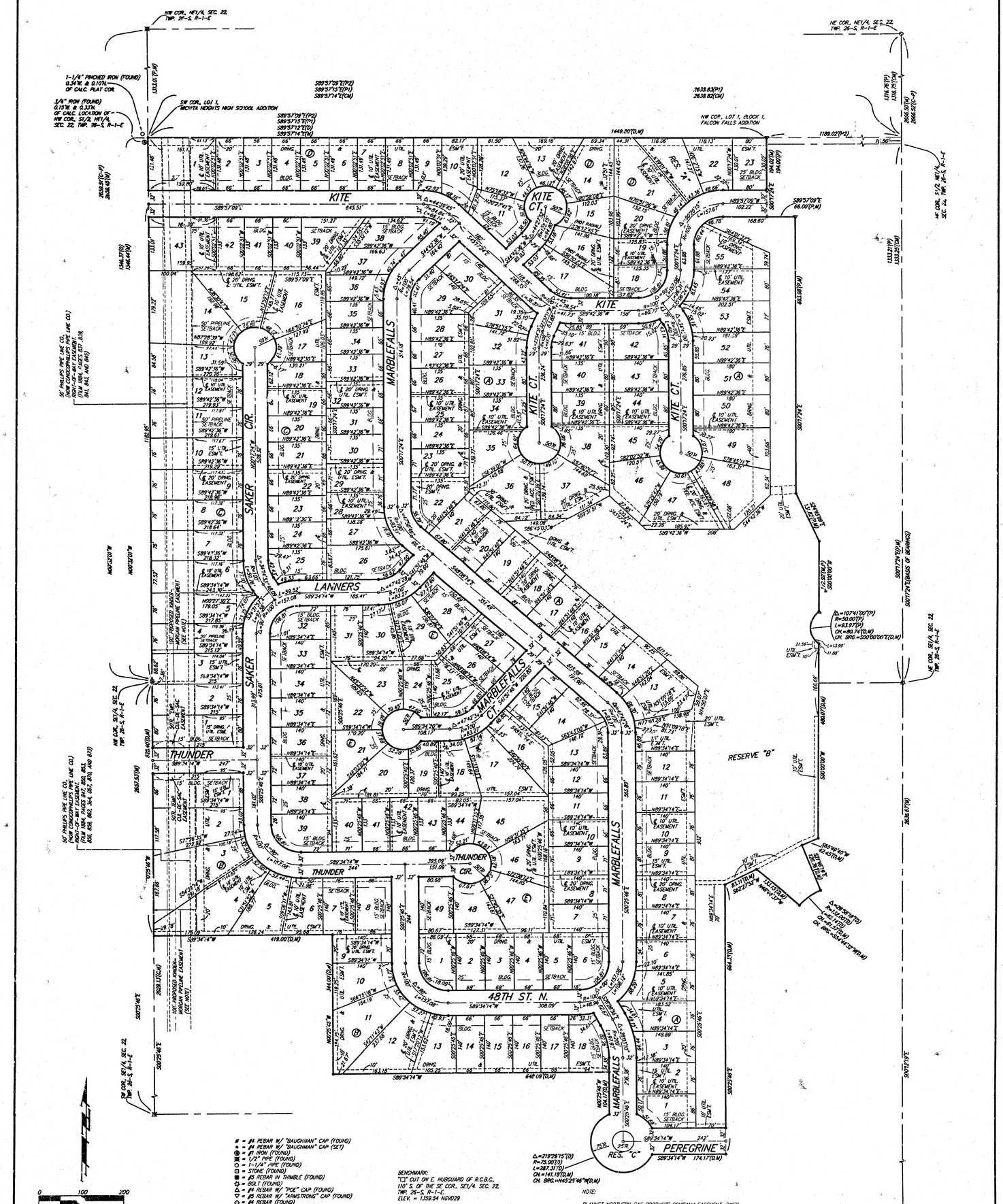

NOTE:
ALL LOTS WITHIN FALCON FALLS 2ND ADDITION SHALL HAVE A 5 FOOT INTERIOR SIDEYARD SETBACK.

NOTE:
A master grading plan for drainage has been developed for this subdivision and is on file with the City of Wichita, Kansas. All drainage easements, right-of-ways, or reserves shall remain at established grades or as modified with the approval of the City Engineer of the City of Wichita, Kansas. No obstructions which impede the flow of this drainage system shall be allowed.

= #4 REBAR W/ "BAUGHMAN" CAP (FOUND)
● = #4 REBAR W/ "BAUGHMAN" CAP (SET)
◉ = #1 IRON (FOUND)
⊠ = 1/2" PIPE (FOUND)
○ = 1-1/4" PIPE (FOUND)
□ = STONE (FOUND)
■ = #5 REBAR IN THIMBLE (FOUND)
⌂ = BOLT (FOUND)
△ = #4 REBAR W/ "POE" CAP (FOUND)
▽ = #5 REBAR W/ "ARMSTRONG" CAP (FOUND)
◇ = #4 REBAR (FOUND)

(M) = MEASURED
(P) = PLATTED
(D) = DESCRIBED
(C) = CALCULATED
(CM) = CALCULATED PER MEASURED INFO.
(C-P) = CALCULATED PER PLATTED INFO.
(P1) = CALCULATED PER HEIGHTS HIGH SCHOOL PLATTED INFO.
(P2) = PLATTED INFO. PER FALCON FALLS ADDITION

BENCHMARK:
"□" CUT ON E. HUBGUARD OF R.C.B.C., 110' S. OF THE SE COR., SE1/4, SEC. 22, TWP. 26-S, R-1-E.
ELEV. = 1359.54 NGVD29

MINIMUM BUILDING PAD ELEVATIONS FOR LOWEST OPENING TO THE STRUCTURES

LOT	BLOCK	ELEVATION NGVD29
1-9	A	1353.0
10-12	A	1354.0
13-19, 36, 37	A	1355.0
46-50	A	1355.0
51-55	A	1357.0
21, 22	D	1359.5

NOTE:

BLANKET NORTHERN GAS PRODUCTS COMPANY EASEMENT, (MISC. BOOK 495, PAGE 172), NOW ASSIGNED TO KINDER MORGAN OPERATING L.P. "A", OVER THE SE1/4 OF SEC. 22, TWP. 26-S, R-1-E IS IN THE PROCESS OF BEING CONFINED THIS 31ST DAY OF MAY, 2005.

50' NORTHERN GAS PRODUCTS COMPANY EASEMENT, (MISC. BOOK 499, PAGE 385), NOW ASSIGNED TO KINDER MORGAN OPERATING L.P. "A", OVER THE W1/2 OF THE SW1/4 OF THE NE1/4 OF SEC. 22, TWP. 26-S, R-1-E IS IN THE PROCESS OF BEING RECONFIGURED THIS 31ST DAY OF MAY, 2005.

50' NORTHERN GAS PRODUCTS COMPANY EASEMENT, (MISC. BOOK 501, PAGE 508), NOW ASSIGNED TO KINDER MORGAN OPERATING L.P. "A", OVER THE WEST 50' OF THE W1/2 OF THE NW1/4 OF THE NE1/4 OF SEC. 22, TWP. 26-S, R-1-E IS IN THE PROCESS OF BEING RECONFIGURED THIS 31ST DAY OF MAY, 2005.

PAGE 2 OF 2

Baughman Company, P.A.
315 Ellis St. Wichita, KS 67211 P 316-262-7271 F 316-262-0149
Baughman ENGINEERING | SURVEYING | PLANNING | LANDSCAPE ARCHITECTURE

F/PLAT/FALCON FALLS 2ND ADDITION/DWG/FALCONFALLSF.DWG-MGC