SANITARY SEWER IMPROVEMENTS

to serve

Lot 1, Block 2, Kessler-Koch Addition

CITY OF WICHITA, KANSAS

Michael E. Lindebak, P.E. City Engineer

Private Project Number

955 PPS (607861)

GENERAL NOTES:

1. Contractor will be required to provide notice to utility companies a minimum of twenty-four (24) hours prior to any excavation, as follows:

   Kansas One-Call 687-2470

   The Contractor must notify the following in case of an emergency:

Multimedia Cablevision	262-0661
K.P.L. Gas Service Company	383-8650
Kansas Gas & Electric Company	303-8600
Peoples Gas Company	942-8350
Southwestern Bell Telephone Company	1-571-2611
City of Wichita Water Dept.	268-4908
City of Wichita Traffic Engineering	269-4446

2. Underground utility service lines and overhead utility pole lines are to be adjusted as necessary by others prior to construction unless the plans specifically call for their adjustment by the Contractor or unless the plans specifically identify a utility to be adjusted by its owner during construction. Existing utilities and their location, as shown on the plans, represent the best information obtainable for design. The Contractor will be required to work around existing utilities within the right-of-way which do not conflict with proposed construction.

3. Trees and shrubs in public right-of-way which are in direct conflict with proposed new construction shall be removed by the Contractor with the Engineer's approval. Trees and shrubs which are not in direct conflict with proposed new construction shall be saved and protected from damage.

4. The Contractor shall give all property owners and/or tenants of developed property abutting the construction of this project a minimum of ten (10) days advance notice prior to start of construction.

5. The Contractor shall be responsible for preserving property irons. The Contractor will be required to re-establish any property irons which are damaged or destroyed by his construction operations. Such irons shall be re-established by a licensed land surveyor in accordance with state laws.

6. All areas disturbed by construction operations shall by seeded with rye grass at a rate of 300 lbs/acre immediately following construction in that area. Prior to seeding, area shall be prepared per City specs.

7. The Contractor shall be responsible for maintaining continuous flow of sewage through construction. Contractor's proposed method for maintaining sewage flow shall be approved by the Engineer. Cost of maintaining flow of sewage through construction will not be paid for directly and this cost shall be considered as subsidiary to the other pay items of work.

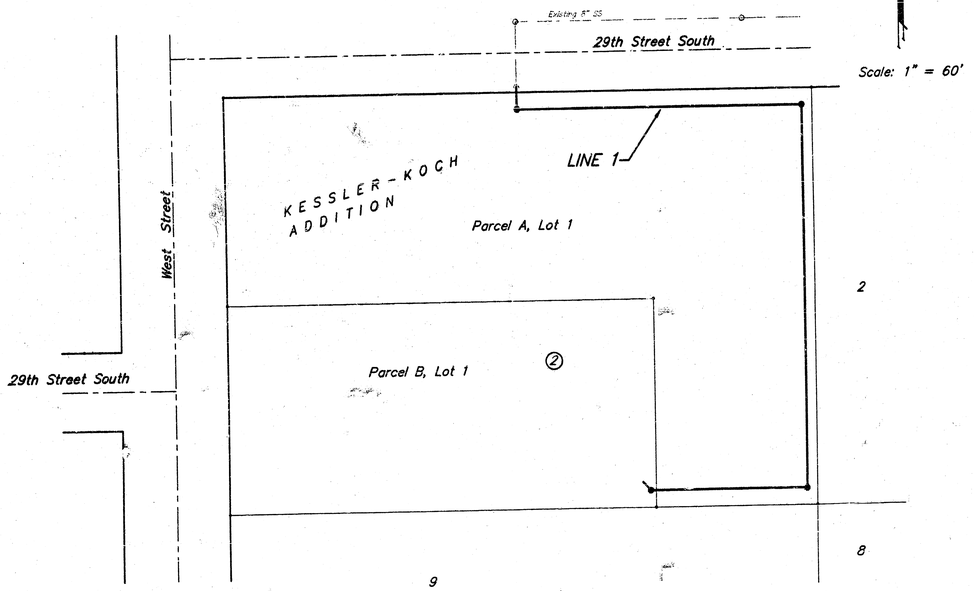

BENCHMARK:

North end of RCBC, east side of West Street, 23.2' north and 23.5' east of section corner, 37.5' northeast of section corner.
Elev. = 134.40 (City Datum)

INDEX:

Title Sheet	1
Line 1	2
Standard Manhole Detail	3
Ring & Cover Detail	4
Copy of Plat	5

APPROVED AS NOTED
BY CITY ENGINEER OF WICHITA
Sanitary Sewers VRH 1/5/00

NOTE TO CONTRACTORS

Installation, inspection and testing for this project is to be provided by a Licensed Consulting Engineering Firm under contract with the Owner/Developer. Said inspection to be in accordance with the City of Wichita standard construction engineering practices and certified by a Licensed Professional Engineer. No work shall be performed in dedicated easements or public right-of-way by the Contractor without such inspection nor shall any work be commenced without written authorization by the City Engineer. All Construction and Materials shall comply with the City of Wichita Specifications and Standards (on file and available in the City Engineer's Office).

Booked
P-131
R.A.L
6-13-00

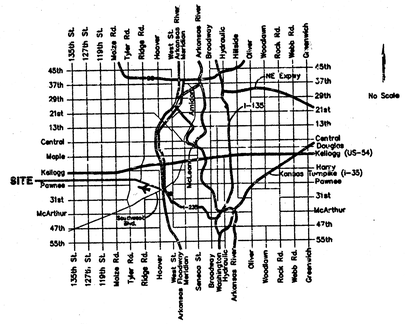

Vicinity Map

PROJECT INSPECTED + ASBUILT BY BAUGHMAN COMPANY, P.A. 3/2000 JMN

JANUARY 2000

BAUGHMAN COMPANY P.A.
ENGINEERING, SURVEYING, & PLANNING
316-262-7271 • 315 ELLIS • WICHITA, KANSAS 67211

TERRENCE WOOTEN LICENSED 8470 KANSAS PROFESSIONAL ENGINEER

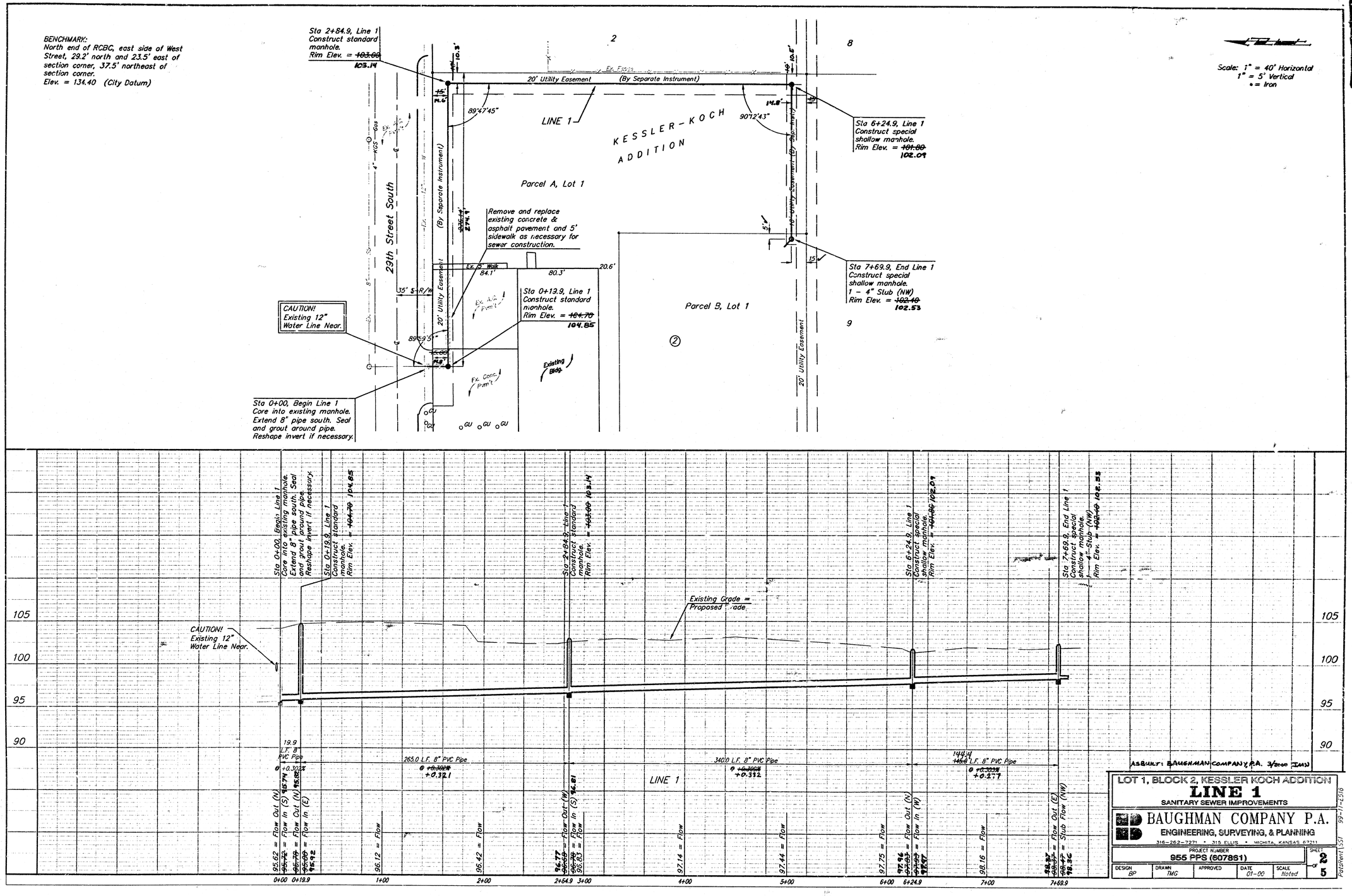

BENCHMARK:
North end of RCBC, east side of West Street, 29.2' north and 23.5' east of section corner, 37.5' northeast of section corner.
Elev. = 134.40 (City Datum)
Sta 2+84.9, Line 1
Construct standard manhole.
Rim Elev. = ~~103.00~~ 103.14
Sta 6+24.9, Line 1
Construct special shallow manhole.
Rim Elev. = ~~101.80~~ 102.09
Sta 7+69.9, End Line 1
Construct special shallow manhole.
1 - 4" Stub (NW)
Rim Elev. = ~~102.40~~ 102.53
Sta 0+19.9, Line 1
Construct standard manhole.
Rim Elev. = ~~104.70~~ 104.85
Sta 0+00, Begin Line 1
Core into existing manhole.
Extend 8" pipe south. Seal and grout around pipe.
Reshape invert if necessary.
CAUTION!
Existing 12" Water Line Near.
Remove and replace existing concrete & asphalt pavement and 5' sidewalk as necessary for sewer construction.
KESSLER-KOCH ADDITION
LINE 1
Parcel A, Lot 1
Parcel B, Lot 1
29th Street South
20' Utility Easement
(By Separate Instrument)
Existing Bldg.
Scale: 1" = 40' Horizontal
1" = 5' Vertical
• = Iron
Existing Grade = Proposed Grade
265.0 L.F. 8" PVC Pipe
340.0 L.F. 8" PVC Pipe
LINE 1
ASBUILT: BAUGHMAN COMPANY, P.A. 3/2000 JMN
LOT 1, BLOCK 2, KESSLER KOCH ADDITION
LINE 1
SANITARY SEWER IMPROVEMENTS
BAUGHMAN COMPANY P.A.
ENGINEERING, SURVEYING, & PLANNING
316-262-7271 • 315 ELLIS • WICHITA, KANSAS 67211
PROJECT NUMBER
955 PPS (607861)
SHEET 2 OF 5
DESIGN BP
DRAWN TMG
APPROVED
DATE 01-00
SCALE Noted

SEWER APPURTENANCES DETAILS

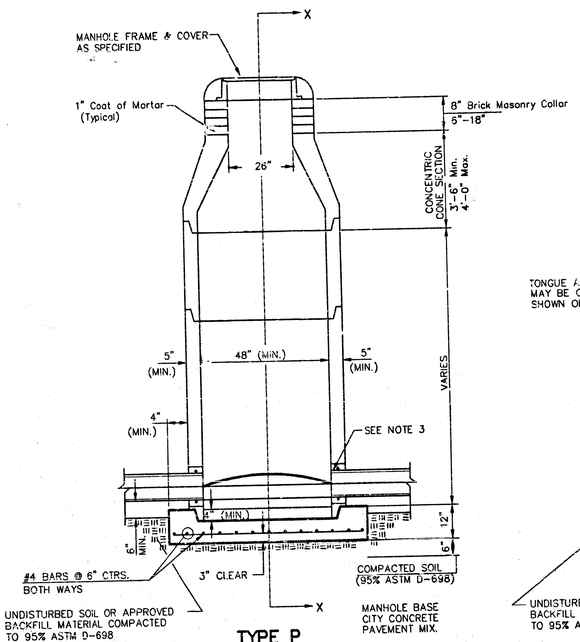

TYPE P
STANDARD MANHOLE

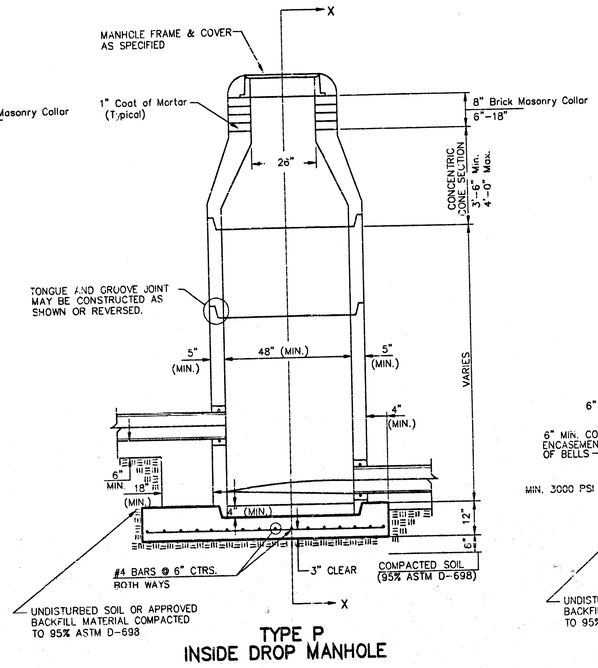

TYPE P
INSIDE DROP MANHOLE

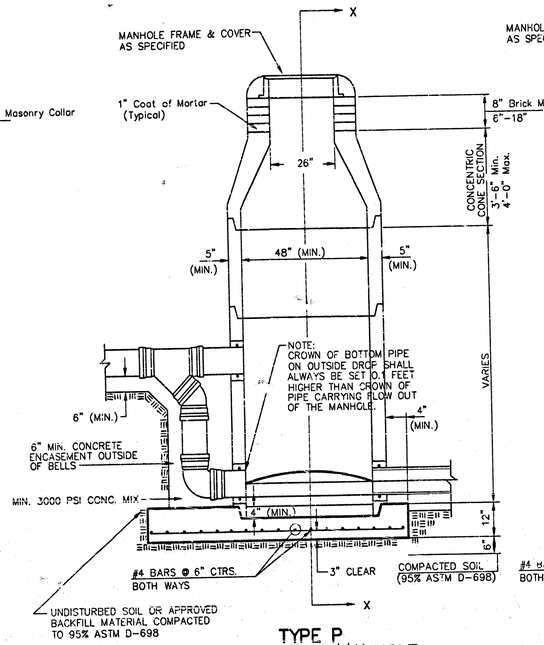

TYPE P
OUTSIDE DROP MANHOLE

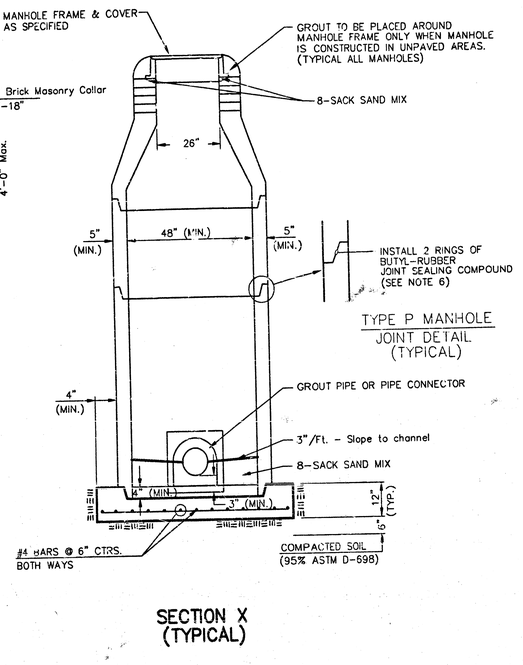

SECTION X
(TYPICAL)

GENERAL NOTES

PRECAST MANHOLE NOTES

1. ALL PRECAST CONCRETE MANHOLE SECTIONS SHALL CONFORM TO THE LATEST REVISIONS OF A.S.T.M. C478 AS MODIFIED BY THE SPECIFICATIONS.
2. NON-SHRINK GROUT SHALL BE NON-METALLIC TYPE.
3. APPROVED FLEXIBLE WATERSTOP GASKETS SHALL BE INSTALLED TO JOIN THE SEWER TO THE MANHOLE WALL WHEN A.B.S. COMPOSITE PIPE OR P.V.C. PIPE IS USED. FOR OTHER TYPES OF PIPE THE SEWER SHALL BE GROUTED IN PLACE WITH NON-SHRINK GROUT. THE SEWER PIPE SHALL BE SUPPORTED WITH CONCRETE ENCASEMENT A MINIMUM OF 3 FEET FROM THE MANHOLE WALL AND TO THE FIRST JOINT FOR V.C.P. SUCH THAT THE JOINT REMAINS FLEXIBLE.
4. ALL INSIDE SURFACES OF THE CONCRETE MANHOLE WHICH WOULD BE EXPOSED TO SEWER GAS SHALL BE COATED WITH 2 COATS TNEMEC SERIES 66 HI-BUILD EPOXOLINE, DRY THICKNESS OF 8 MILS (MIN.)
5. EXTERIOR MANHOLE WALLS SHALL BE COATED WITH 1 COAT MOBILARMA 633 BITUMINOUS COATING.
6. JOINT SEALING COMPOUND SHALL BE KENT SEAL NO. 2 OR APPROVED EQUAL.
7. PRECAST MANHOLES SHALL BE SET AT LEAST 4 INCHES INTO THE MANHOLE BASE.
8. TOP OF MANHOLE FLOOR SLAB SHALL BE AT LEAST 3 INCHES BELOW THE FLOW LINE OF THE OUTLET PIPE TO INSURE SUFFICIENT MINIMUM THICKNESS OF SHAPED INVERT.
9. LIFTING HOLES SHALL BE FILLED WITH NON-SHRINK GROUT AND THE INTERIOR SURFACE COATED AS SPECIFIED.
10. MORTAR USED IN MASONRY CONSTRUCTION SHALL CONTAIN 8 SACKS OF CEMENT PER CUBIC YARD. CONCRETE USED IN MANHOLE BASES SHALL CONFORM TO THE REQUIREMENTS OF CONCRETE FOR CONCRETE PAVEMENT CONSTRUCTION AS SPECIFIED IN THE CITY STANDARD PAVING SPECIFICATIONS USING CITY CONCRETE PAVEMENT MIX WITHOUT AIR ENTRAINING ADMIXTURE. MORTAR SHALL BE PLACED AROUND THE MANHOLE RING AS SHOWN ON THE DRAWINGS WHEN MANHOLES ARE CONSTRUCTED IN UNPAVED AREAS. MANHOLES CONSTRUCTED WHERE PIPE SIZES ARE SMALLER THAN 24" SHALL HAVE AN INSIDE DIAMETER OF 4'. MANHOLES CONSTRUCTED WHERE PIPE SIZES ARE 24" OR LARGER SHALL HAVE AN INSIDE DIAMETER OF 5'. COMPLETED MANHOLE SHALL BE WITHOUT LEAKS AND WATER TIGHT.
11. REINFORCING STEEL SHALL BE INSTALLED IN THE MANHOLE BASES AND SHALL CONSIST OF NO. 4 BARS PLACED ON 6" CENTERS IN BOTH DIRECTIONS. THE MANHOLE BASE REINFORCEMENT SHALL BE PLACED AT LEAST 3" ABOVE THE BOTTOM OF THE MANHOLE BASE. ALL COSTS FOR FURNISHING AND INSTALLING REINFORCING STEEL SHALL BE INCLUDED IN THE UNIT PRICE BID FOR THE MANHOLE.
12. OPENINGS SHALL BE CUT INTO THE MANHOLE WALL WHEN OUTSIDE DROPS ARE CONSTRUCTED ON EXISTING MANHOLES. SUCH OPENINGS CUT INTO EXISTING MANHOLES SHALL BE AS SMALL AS PRACTICAL TO FACILITATE INSTALLING AND GROUTING THE NEW PIPE IN PLACE. WATERSTOP GASKETS SHALL BE USED WITH P.V.C. AND A.B.S. COMPOSITE PIPE. THE NEW PIPE SHALL BE GROUTED INTO THE OPENING USING AN APPROVED NON-SHRINK GROUT FOR THE FULL MANHOLE WALL THICKNESS. THE EXTERIOR OF THE COMPLETED CONNECTION SHALL BE SEALED WITH AN APPROVED BITUMINOUS COATING SUCH THAT THE CONNECTION WILL BE WATER TIGHT. FLOOR OF MANHOLE SHALL BE MODIFIED TO FORM NEW FLOW CHANNEL FOR THE NEW CONNECTION AS INDICATED BY THE DRAWING. THIS WORK, INCLUDING MODIFICATION OF MANHOLE FLOOR, SHALL BE PAID FOR AT THE UNIT PRICE BID FOR OUTSIDE DROP STACK CONSTRUCTED ON EXISTING MANHOLE.
13. THE FLOORS OF ALL MANHOLES SHALL BE SHAPED WITH FLOW CHANNELS SUCH THAT THE MANHOLES WILL BE SELF CLEANING AND FREE OF AREAS WHERE SOLIDS COULD BE DEPOSITED AS SEWAGE FLOWS THROUGH THE MANHOLE FROM ALL INLET PIPES TO THE OUTLET PIPE. FLOW CHANNELS SHALL BE FORMED TO MATCH THE BOTTOM HALVES OF THE INFLOWING PIPES AND THE OUTFLOWING PIPE AS SHOWN BY THE DRAWINGS EXCEPT FOR INSIDE DROP MANHOLES. FLOW CHANNELS FOR INSIDE DROP MANHOLES SHALL BE CONSTRUCTED AS INDICATED BY THE DRAWING. MANHOLE FLOORS SHALL HAVE SLOPES OF 3 INCHES PER FOOT IN THE AREAS OUTSIDE OF THE FLOW CHANNELS SLOPED TOWARD THE FLOW CHANNELS. PIPES LAID THROUGH MANHOLES SHALL HAVE THE TOP HALF REMOVED TO NEAT LINES FOR THE FULL INSIDE DIAMETER OF THE MANHOLE. MANHOLE FLOORS SHALL THEN BE SHAPED AROUND THE BOTTOM HALF OF THE PIPE WHICH FORMS THE FLOW CHANNEL.
14. PIPES INSTALLED WITHIN THE EXCAVATION MADE FOR THE MANHOLE SHALL BE CRADLED WITH CONCRETE TO THE LIMITS OF THE MANHOLE EXCAVATION. WHEN CLAY PIPE IS USED, THE CRADLE SHALL EXTEND TO THE FIRST JOINT OUTSIDE THE MANHOLE. THE CRADLE SHALL BE TERMINATED AT THE CLAY PIPE JOINT IN A MANNER WHICH WILL MAINTAIN THE FLEXIBILITY OF THE JOINT. COST OF CRADLE WITHIN MANHOLE EXCAVATION OR TO CLAY PIPE JOINTS ADJACENT TO MANHOLE SHALL BE INCLUDED IN THE UNIT PRICE BID FOR THE MANHOLE.
15. MANHOLE COVER CASTINGS AND MANHOLE FRAME CASTINGS SHALL CONFORM TO THE REQUIREMENTS AS INDICATED IN THE STANDARD SPECIFICATIONS AND AS SHOWN IN THE STANDARD DETAIL DRAWING.
16. THE VERTICAL DROP IN INSIDE DROP MANHOLES SHALL NOT EXCEED 2' FOR INFLOWING PIPES SIZED 12" OR SMALLER AND 2' FOR INFLOWING PIPES LARGER THAN 12". THE CROWNS OF INFLOWING PIPES SHALL NEVER BE SET LOWER THAN THE CROWN OF THE OUTFLOWING PIPE.
17. STANDARD MANHOLES AND STANDARD INSIDE DROP MANHOLES SHALL BE BID AS STANDARD MANHOLES FOR THE TYPE AND DIAMETER INDICATED. OUTSIDE DROP MANHOLES SHALL BE BID AS STANDARD OUTSIDE DROP MANHOLES FOR THE TYPE AND DIAMETER INDICATED. ALL MANHOLE DIAMETERS WILL BE 4' UNLESS INDICATED OTHERWISE.
18. A BRICK MASONRY COLLAR SHALL BE INSTALLED BETWEEN THE CAST IRON FRAME AND THE CONCENTRIC CONE. THE COLLAR WILL HAVE 8" WALLS AND A VERTICAL HEIGHT OF 6" MINIMUM AND 18" MAXIMUM. A 1" COAT OF MORTAR WILL BE PLASTERED ON THE OUTSIDE OF THE COLLAR. THE USE OF PRE-CAST CONCRETE SPACERS FOR MANHOLE TOP ADJUSTMENT IS ALSO ALLOWED.

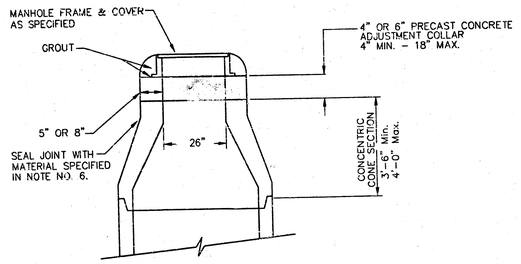

ALTERNATE CONSTRUCTION
IN UNPAVED AREAS

CITY OF WICHITA
STD. MANHOLE DETAILS
SEWER APPURTENANCES

BAUGHMAN COMPANY P.A.
ENGINEERING, SURVEYING, & PLANNING
316-262-7271 • 315 ELLIS • WICHITA, KANSAS 67211

PROJECT NUMBER: 955 PPS (607861)
SHEET: 3 OF 5

DESIGN	DRAWN	APPROVED	DATE	SCALE
STAFF	STAFF		01-00	NONE

09-11-E316

MANHOLE FRAME AND COVER DETAIL

ADOPTED AS STANDARD DESIGN BY
CITY OF WICHITA, KANSAS

MANHOLE COVER
Weight = 180 Lbs.

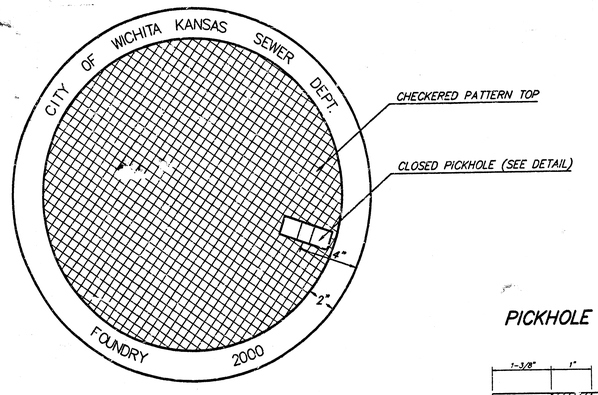

TOP VIEW

PICKHOLE DETAIL

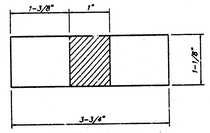

TOP VIEW

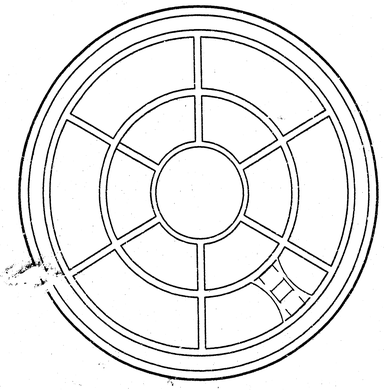

BOTTOM VIEW

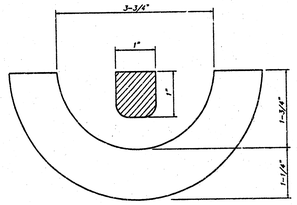

SECTION VIEW

MANHOLE FRAME
Weight = 145 Lbs.

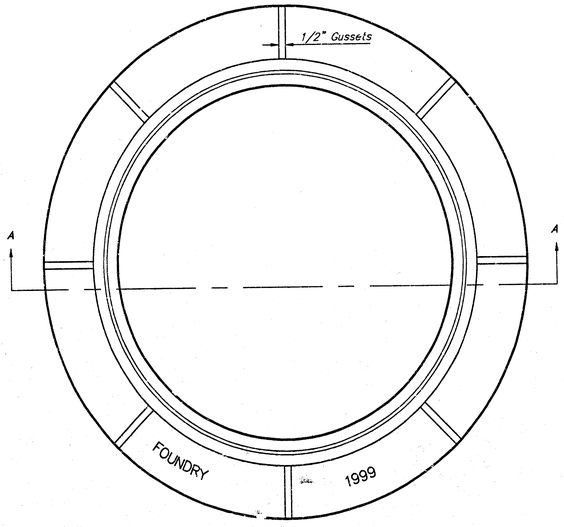

TOP VIEW

GENERAL NOTES

MANHOLE CASTINGS SHALL BE MANUFACTURED USING GOOD QUALITY GRAY IRON CONFORMING TO CLASS 30 OF A.S.T.M. DESIGNATION A-48. DIMENSIONS AND WEIGHTS SHOWN ON THE DETAILED DRAWINGS SHALL BE CONSIDERED AS MINIMUM REQUIREMENTS AND ANY DEVIATIONS FROM THE DIMENSIONS SHOWN MUST BE SPECIFICALLY APPROVED. THE FINISHED CASTINGS SHALL BE OF UNIFORM QUALITY, FREE FROM BLOWHOLES, POROSITY, HARD SPOTS, SHRINKAGE DISTORTIONS OR OTHER DEFECTS.

MANHOLE CASTINGS SHALL BE COATED WITH AN ASPHALT PAINT RESULTING IN A SMOOTH, TOUGH AND TENACIOUS COATING WHICH IS NOT BRITTLE OR TACKY.

MANHOLE CASTINGS SHALL BE MANUFACTURED SUCH THAT A COVER MANUFACTURED BY ANY ONE FOUNDRY WILL FIT INTERCHANGEABLY INTO A FRAME MANUFACTURED BY ANOTHER FOUNDRY AND STILL MEET ALLOWABLE CLEARANCES AND NON-ROCKING REQUIREMENTS. THIS WILL REQUIRE MANUFACTURING OF THE MATCHING FACES ON THE COVER AND THE FRAME TO CLOSE TOLERANCES.

THE OUTSIDE CIRCUMFERENCE OF THE VERTICAL FACE OF THE COVER AND THE INSIDE CIRCUMFERENCE OF THE VERTICAL FACE IN THE FRAME RECESS SHALL BE MANUFACTURED TO TOLERANCES SUCH THAT THE CLEARANCE BETWEEN THE COVER AND FRAME WILL NOT EXCEED 1/8" AT ANY POINT AROUND THE CIRCUMFERENCE OF THE COVER. THE SEATING SURFACES BETWEEN THE COVER AND FRAME SHALL BE MACHINED SUCH AS THESE SURFACES SHALL MAKE FULL CONTACT FOR THEIR FULL CIRCUMFERENCE TO PRECLUDE THE COVER FROM ROCKING IN THE FRAME.

THE MANHOLE FRAME AND COVER SHALL BE MARKED WITH LETTERING INDICATING THE NAME OF THE MANUFACTURER AND THE YEAR WHEN THE COVER OR FRAME WAS CAST. THE COVER SHALL BE FURTHER IDENTIFIED WITH REGARDS TO OWNERSHIP USING LETTERS AT LEAST 1 INCH IN HEIGHT. THIS IDENTIFICATION SHALL BE "CITY OF WICHITA SEWER DEPARTMENT". THE WORD DEPARTMENT MAY BE ABBREVIATED. THE TEXTURE OF THE TOP SURFACE OF THE COVER SHALL BE MANUFACTURED IN A CHECKERED PATTERN DESIGN AS INDICATED ON THE DRAWINGS. SMOOTH BLOCKOUTS SHALL BE UTILIZED TO HIGHLIGHT THE LETTERING ON THE COVER SURFACE. THE TOTAL AREA OF SMOOTH SURFACE BLOCKOUT SHALL NOT EXCEED THE AREA AS INDICATED ON THE DRAWING. POSITIONING OF SMOOTH BLOCKOUTS AND LETTERING MAY VARY FROM THAT SHOWN ON THE DETAILED DRAWING.

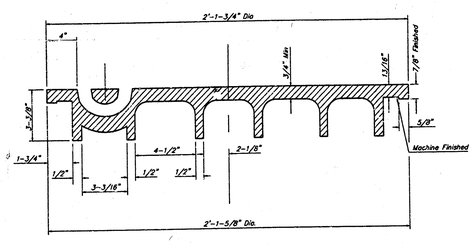

SECTION VIEW

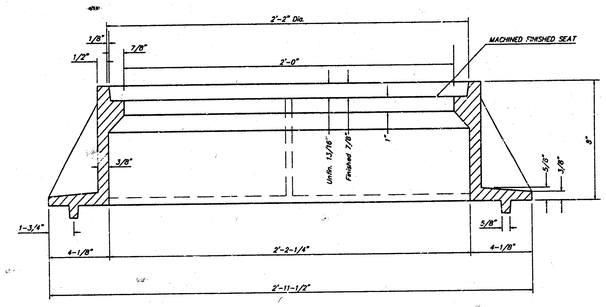

SECTION A-A

MANHOLE FRAME AND COVER DETAIL
ADOPTED AS STANDARD DESIGN BY
CITY OF WICHITA, KANSAS

BAUGHMAN COMPANY P.A.
ENGINEERING, SURVEYING, & PLANNING
316-262-7271 • 315 ELLIS • WICHITA, KANSAS 67211

PROJECT NUMBER	SHEET
955 PPS (607861)	4 of 5

DESIGN	DRAWN	APPROVED	DATE	SCALE
STAFF	STAFF		01-00	NONE

Pathfert\Mining 99-11-E516

KESSLER - KOCH ADDITION

WICHITA, SEDGWICK COUNTY, KANSAS

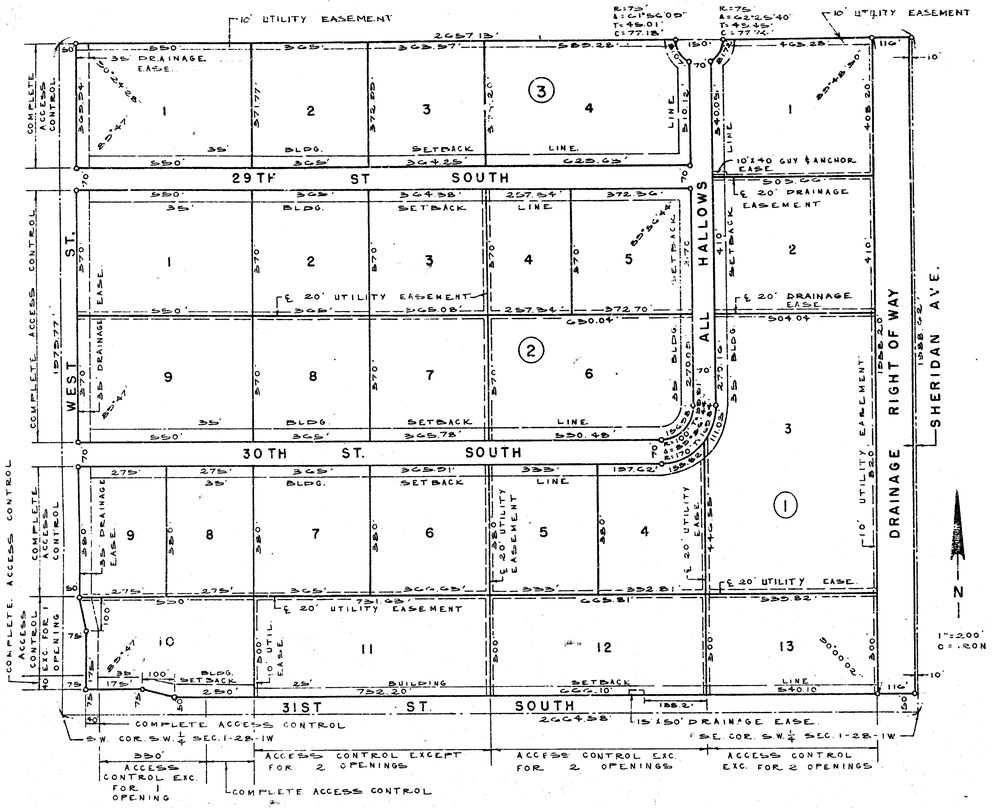

This plat approved and all dedications shown hereon accepted by the Board of County Commissioners of Sedgwick County, Kansas, this 24 day of September, 1975.

Earl E. Rush, Chairman

ATTEST:

George Pierce, County Clerk
George Pierce

Tom Scott, Commissioner

John Hale, Commissioner

Entered on transfer record this 26 day of Sept, 1975.

George Pierce, County Clerk
George Pierce

249064

State of Kansas, County of Sedgwick, SS.

This is to certify that this instrument was filed for record in the Register of Deeds Office, at 4:30 o'clock P .m., on the 26th day of September, 1975.

Bette F. McCart, Register of Deeds
Bette F. McCart

Pearl B. Gilbert, Deputy
Pearl B. Gilbert

State of Kansas, County of Sedgwick, SS.

I, Kenneth O. Taylor, Civil Engineer in said State and County, do hereby certify that I have surveyed and platted "KESSLER-KOCH ADDITION", Wichita, Sedgwick County, Kansas, and that the accompanying plat is a true and correct exhibit of said survey described as follows: The E 1/2 of the SE 1/4 of the SW 1/4 in Section 1, T28S, R1W of the 6th P.M., Sedgwick County, Kansas and the S 1/2 of the NE 1/4 of the SW 1/4 of Section 1, T28S, R1W of the 6th P.M., Sedgwick County, Kansas, being owned by Koch Industries, Inc., also The S 1/2 of the NW 1/4 of the SW 1/4 of Section 1, T28S, R1W of the 6th P.M., the W 1/2 of the SE 1/4 of the SW 1/4 of Section 1, T28S, R1W of the 6th P.M. and the SW 1/4 of the SW 1/4 of Section 1, T28S, R1W of the 6th P.M., all in Sedgwick County, Kansas, being owned by Kessler Bros., Inc.

The above described property includes all of The Replat of Ridgeview Fourth Addition, an Addition to the City of Wichita, Sedgwick County, Kansas and all of Ridgeview Fifth Addition, an Addition to the City of Wichita, Sedgwick County, Kansas, both Additions being vacated and replatted by virtue of K.S.A. 1970 Supp. 12-512(b).

Kenneth O. Taylor, Civil Engineer
Kenneth O. Taylor

Know all men by these presents that Kessler Bros., Inc. by Frank M. Kessler, President and Koch Industries, Inc. by S. V. Varner, President, have caused the land described in the Civil Engineer's certificate to be platted into lots, blocks, streets and drainage right of way. Utility easements as indicated on the plat are hereby granted for the construction and maintenance of all public utilities. Drainage easements as indicated on the plat are hereby granted for drainage purposes. The streets are hereby dedicated to and for the use of the public. The drainage right of way as indicated on the plat is hereby dedicated to the public.

All abutter's rights of access to or from West Street, over and across the west line of Lot 1, Block 3, Lots 1 and 9, Block 2, and Lots 9 and 10, Block 1, are hereby granted to the City of Wichita, provided, however, that Lot 10, Block 1 shall have access to West Street at one location, except over and across the south 40 feet of the west line of said Lot 10, Block 1, such location to be designated by the City Engineer of the City of Wichita, Kansas. All abutter's rights of access to or from 31st Street South, over and across the south line of Lots 10, 11, 12 and 13, Block 1, are hereby granted to the City of Wichita, provided, however, that Lots 11, 12 and 13, Block 1 shall have access to 31st Street South at two locations each and Lot 10, Block 1 shall have access to 31st Street South at one location, over and across the east 330 feet of the west 370 feet of the south line of said Lot 10, Block 1, such locations to be designated by the City Engineer of the City of Wichita, Kansas.

Kessler Bros., Inc.

Frank M. Kessler, President

ATTEST:

Emmett Kessler, Secretary

Koch Industries, Inc.

S. V. Varner, President

ATTEST:

Olive A. Witterman, Secretary

KOCH INDUSTRIES, INC. KANSAS SEAL CORPORATION

State of Kansas, County of Sedgwick, SS.

The foregoing instrument was acknowledged before me this _____ day of _____, 19_____ by Frank M. Kessler, President of Kessler Bros., Inc., a Kansas corporation on behalf of the corporation.

Dolores E Harmon, Notary Public

My Commission expires: _____

State of Kansas, County of Sedgwick, SS.

The foregoing instrument was acknowledged before me this _____ day of _____, 19_____ by S. V. Varner, President of Koch Industries, Inc., a Kansas corporation, on behalf of the corporation.

GARL G. FLETCHER NOTARY PUBLIC SEDGWICK COUNTY, KANSAS My Appt. Expires DEC. 26, 1977

Garl G. Fletcher, Notary Public

My Commission expires: _____

This plat of "KESSLER-KOCH ADDITION", Wichita, Sedgwick County, Kansas has been submitted to and approved by the Wichita-Sedgwick County Metropolitan Area Planning Commission, Wichita, Kansas.

Dated this 26th day of June, 1975.

Wichita-Sedgwick County Metropolitan Area Planning Commission

Harlan R. Kamen, Chairman

Robert A. Lakin, Secretary

This plat approved and all dedications shown hereon accepted by the Board of City Commissioners of the City of Wichita, Kansas, this 16 day of Sept., 1975.

Connie A. Peters, Mayor

Donald C. Gisick, City Clerk

CITY OF WICHITA

C-1 4-21

5/5