CONSTRUCTION PLANS FOR

PRIVATE SANITARY SEWER EXTENSION

TO SERVE

PIERSON DENTAL AT LEGACY PARK WILSON ESTATES ADDITION

IN

THE CITY OF WICHITA,

SEDGWICK COUNTY, KANSAS

MICHAEL E. LINDEBAK, P.E.- CITY ENGINEER

PRIVATE PROJECT NO. 1111 PPS (607861)

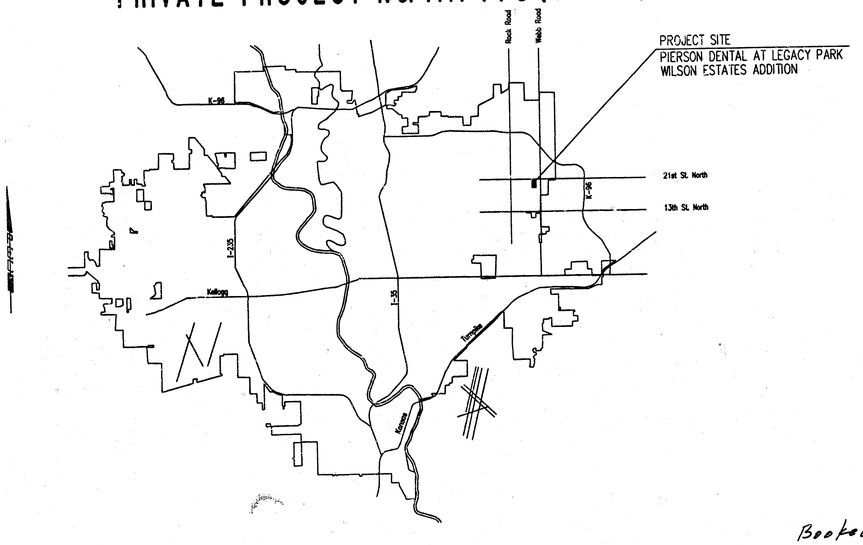

LOCATION MAP

INDEX OF SHEETS

SHEET NO. 1	TITLE SHEET
SHEET NO. 2	KEY MAP AND GENERAL NOTES
SHEET NO. 3	PLAT
SHEET NO. 4	LOT SPLIT
SHEET NO. 5	PLAN/PROFILE
SHEET NO. 6	TYPE "P" MANHOLE DETAILS
SHEET NO. 7	FRAME & COVER DETAILS
SHEET NO. 8	RISER DETAILS

APPROVED AS NOTED
By CITY ENGINEER OF WICHITA

Sanitary Sewers VRH 4/23/01

Storm Sewers _____

Driveway Approaches _____

Water Mains _____

Paving _____

INSPECTION AND TESTING FOR THIS PROJECT IS TO BE PROVIDED BY A LICENSED CONSULTING ENGINEERING FIRM CONTRACTED BY THE OWNER/DEVELOPER. SAID INSPECTION TO BE IN ACCORDANCE WITH THE CITY OF WICHITA STANDARD CONSTRUCTION ENGINEERING PRACTICES AND CERTIFIED BY A LICENSED PROFESSIONAL ENGINEER. NO WORK SHALL BE PERFORMED IN DEDICATED EASEMENTS OR THE PUBLIC RIGHT-OF-WAY BY THE CONTRACTOR WITHOUT SUCH INSPECTION NOR SHALL ANY WORK BE COMMENCED IN DEDICATED EASEMENTS OR PUBLIC RIGHT-OF-WAY WITHOUT WRITTEN AUTHORIZATION BY THE CITY ENGINEER.

Booked
P-176
7-16-01
RDL

RECORD DRAWING

20 JUNE 01

KORY J. WILSON LICENSED 16337 04/23/01 KANSAS PROFESSIONAL ENGINEER

APRIL 2001

PLANS PREPARED BY

PROFESSIONAL ENGINEERING CONSULTANTS, P.A.

ENGINEERS

WICHITA, KANSAS

DSNR: SAU OPER: CSL SCALE: 1=1.00
G:\2001\01116\SS\STITLE 04-23-2001 08:20:06 am



BENCH MARKS

BM 38- BRASS DISC ON NE CORNER OF CONCRETE VAULT. 415' WEST OF THE CENTERLINE OF WEBB ROAD AND 77.2' NORTH OF THE CENTERLINE OF 21ST ST. NORTH.
ELEV.= 205.70

BM WRA1 - CHISELED "d" T/C @ INLETS NORTH SIDE 21ST ST. NORTH
ELEV.= 205.01

BM - CHISELED "d" TOP S. END OF RCP AT SE CORNER OF ALTERA RETIREMENT CENTER.
ELEV.= 201.73

GENERAL NOTES

1. ALL CONSTRUCTION AND MATERIALS TO COMPLY WITH CITY OF WICHITA SPECIFICATIONS AND STANDARDS.
2. ALL ELEVATIONS SHOWN ARE BASED ON CITY OF WICHITA DATUM.
3. THE CONTRACTOR SHALL LIMIT THE EXTENT OF TRENCH TO REMAIN OPEN OVERNIGHT AND WEEKENDS TO LESS THAN 50 FEET.
4. AT LEAST 72 HOURS PRIOR TO BEGINNING EXCAVATION (EXCLUDING WEEKENDS AND HOLIDAYS), THE CONTRACTOR SHALL CONTACT THE KANSAS ONE-CALL SYSTEM, A UTILITY LOCATION SERVICE, AT (316) 687-2470 TO REQUEST THE LOCAL UTILITY COMPANIES MARK ANY EXISTING LINES WITHIN THE PROJECT AREA.

   THE CONTRACTOR MUST NOTIFY THE FOLLOWING IN CASE OF AN EMERGENCY:

KANSAS GAS SERVICE	832-3169
KCE ELECTRIC	383-8800
SOUTHWESTERN BELL TELEPHONE CO.	1(800)-870-8390
CITY OF WICHITA WATER DEPARTMENT	268-4240
CITY OF WICHITA SEWER MAINTENANCE	268-4940

5. UNDERGROUND UTILITY SERVICE LINES AND OVERHEAD UTILITY POLE LINES ARE TO BE ADJUSTED AS NECESSARY BY OTHERS PRIOR TO CONSTRUCTION UNLESS THE PLANS SPECIFICALLY CALL FOR THEIR ADJUSTMENT BY THE CONTRACTOR OR UNLESS THE PLANS SPECIFICALLY IDENTIFY A UTILITY TO BE ADJUSTED BY ITS OWNER DURING CONSTRUCTION. EXISTING UTILITIES AND THEIR LOCATIONS, AS SHOWN ON THE PLANS, REPRESENT THE BEST INFORMATION OBTAINABLE FOR THE DESIGN. THE CONTRACTOR WILL BE REQUIRED TO WORK AROUND EXISTING UTILITIES WITHIN THE RIGHT-OF-WAY WHICH DO NOT CONFLICT WITH PROPOSED CONSTRUCTION.
6. THE CONTRACTOR SHALL BE RESPONSIBLE FOR PRESERVING PROPERTY IRONS. THE CONTRACTOR WILL BE REQUIRED TO RE-ESTABLISH ANY PROPERTY IRONS WHICH ARE DAMAGED OR DESTROYED BY HIS CONSTRUCTION OPERATIONS. SUCH IRONS SHALL BE RE-ESTABLISHED BY A LICENSED LAND SURVEYOR IN ACCORDANCE WITH STATE LAWS.
7. CONTRACTOR SHALL PROVIDE POSITIVE DRAINAGE AWAY FROM ALL MANHOLE COVERS.
8. MANHOLES SHALL BE TYPE "I" MANHOLES. MANHOLES SHALL BE CONSTRUCTED IN ACCORDANCE WITH THE STANDARD SPECIFICATIONS AND THE STANDARD DETAIL DRAWINGS.
9. ALL LAWN/TURF AREAS DISTURBED BY CONSTRUCTION OF THE PROPOSED IMPROVEMENTS SHALL BE RESTORED WITH THE SAME GRASS/SOD AS EXISTING. RESTORATION OF DISTURBED AREAS SHALL INCLUDE, BUT NOT BE LIMITED TO, TOP SOIL PREPARATION, SEEDING, MULCH, AND/OR RESEDING. ALL SEEDING/SODDING WORK SHALL BE IN ACCORDANCE WITH THE CITY OF WICHITA STANDARD SPECIFICATIONS AND THE CITY OF WICHITA ADMINISTRATIVE REGULATION NO. AR78 WHICH GOVERNS CLEANUP AND RESTORATION OR REPLACEMENT FOLLOWING CONSTRUCTION.
10. RUBBLE FROM THE REMOVAL OF MISCELLANEOUS STRUCTURES INCLUDING ANY TREES REMOVED, TREE TRIMMINGS, AND EXCESS EXCAVATION WHICH IS TO BE WASTED SHALL BE DISPOSED OF ON SITES PROVIDED BY THE CONTRACTOR. THESE SITES SHALL ALSO BE APPROVED BY THE ENGINEER AS TO SUITABILITY, APPEARANCE, AND SITE LOCATION. LOCATIONS THAT, IN THE OPINION OF THE ENGINEER, WILL LEAVE AN UNSIGHTLY APPEARANCE WILL NOT BE APPROVED. ALL DISPOSAL SITES MUST BE APPROVED BY THE KANSAS DEPARTMENT OF HEALTH AND ENVIRONMENT. MATERIAL EITHER STOCKPILED OR DISPOSED OF IN A FLOOD PLAIN WILL REQUIRE A KANSAS STATE BOARD OF AGRICULTURE PERMIT. ANY MATERIAL DUMPED IN WATERS OF THE UNITED STATES OR WETLANDS IS SUBJECT TO U.S. CORPS. OF ENGINEERS PERMITTING REGULATIONS. ANY MATERIAL BURIED OR STOCKPILED BEYOND APPROVED CONSTRUCTION LIMITS MAY REQUIRE ARCHAEOLOGICAL INVESTIGATIONS UNLESS BURIED IN A PREVIOUSLY APPROVED DISPOSAL LOCATION.
11. THE CONTRACTOR SHALL PREVENT ANY CONSTRUCTION DEBRIS FROM ENTERING THE EXISTING SANITARY SEWER DURING CONSTRUCTION.
12. THE CONTRACTOR SHALL GIVE ALL PROPERTY OWNERS AND/OR TENANTS OF DEVELOPED PROPERTY ABUTTING THE CONSTRUCTION OF THIS PROJECT A MINIMUM OF TEN (10) DAYS ADVANCE NOTICE PRIOR TO START OF CONSTRUCTION.
13. CONTRACTOR IS REQUIRED TO MAINTAIN CONTINUOUS FLOW OF SEWAGE IN EXISTING MAINS AT ALL TIMES.
14. THE CONTRACTOR SHALL SEED ALL AREAS DISTURBED BY CONSTRUCTION ACTIVITIES WITH TEMPORARY RYE GRASS. RYE GRASS SEED SHALL BE PLANTED AT A MINIMUM RATE OF SIX (6) POUNDS PER ONE THOUSAND (1,000) SQUARE FEET. THIS TEMPORARY SEEDING MAY BE OMITTED ONLY IF OTHER SEEDING IS REQUIRED IN ACCORDANCE WITH GENERAL NOTE NO. 9 ABOVE. TEMPORARY SEEDING OR PERMANENT SEEDING/SODDING SHALL BE APPLIED WITHIN 14 DAYS AFTER THE AREA HAS BEEN DISTURBED.
15. ALL APPROVED EXCESS EXCAVATION WHICH IS TO BE WASTED SHALL BE STOCKPILED WITHIN LEGACY PARK WILSON ESTATES ADDITION AT NO ADDITIONAL COST TO THE OWNER. STOCKPILE LOCATIONS SHALL BE AS DIRECTED BY MR. GEORGE E. LAHAM, AT 316-292-3950 AND IN ACCORDANCE WITH GENERAL NOTE NO. 12 ABOVE.

RECORD DRAWING

20 JUNE 01

No.	Revision	By	Date

CITY OF WICHITA KANSAS
MICHAEL E. LINDEBAK, P.E.- CITY ENGINEER
PIERSON DENTAL AT LEGACY PARK WILSON ESTATES ADDITION

KEY MAP AND GENERAL NOTES

PRIVATE PROJECT NO. 1111 PPS (607861)

Professional Engineering Consultants, P.A.
303 S. TOPEKA • WICHITA, KANSAS 67202
316-262-2691 • FAX 316-262-3003

Designed by	MDK, KJW	Job No.	34-01116
Drawn by	CSL	Date	April 2001

Sht. 2 of 8

KORY J. WILSON LICENSED 16337 04/23/01 KANSAS PROFESSIONAL ENGINEER

DSNR: SAD OPER: CSL SCALE: 1=100.00
Q:\2001\01116\SS\KEYMAP 04-25-2001 08:20:48 am

LEGACY PARK WILSON ESTATES ADDITION

TO WICHITA, SEDGWICK COUNTY, KANSAS

SCALE: 1"=100'

● = IRON SET UNLESS OTHERWISE NOTED

COORDINATE LIST		
POINT	NORTH	EAST
100	17,180.4400	18,686.5260
101	17,104.3774	18,612.7261
102	17,106.0635	18,030.4811
103	17,101.3509	17,700.5147

(100) = COORDINATE POINT NO.

N.E. Corner Sec. 8, T27S, R2E of the 6th P.M. 1/2" I.P. in Thimble

℄ WEBB ROAD = S

℄ 21ST STREET NORTH = S

℄ WILSON ESTATES PARKWAY

RESERVE "B"

RESERVE "C"

RESERVE "D"

RES. "A" 10'x60'

Street Dedication

Complete Access Control 250'

Access Control except One Joint Opening 100'

Access Control except One Opening 299.46'

Access Control except One Opening 60'

Access Control except One Opening 453.90'

Complete Access Control 200'

Access Control - Two Openings 1128.40'

S.E. Corner, NE 1/4, Sec. 8, T27S, R2E

S0°54'41"E 1216.40'

S0°54'41"E 984.26'

℄ 66' Williams Gas Pipeline Easement Film 1603, Page 709

20' Utility Easement

10' S88°58'13"W

142.14' S0°54'41"E

S0°54'41"E 1091.79'

653.90'

299.46'

90.00'

S0°26'31"E 101.12'

78.43'

S0°54'41"E 175.00'

20' Utility Easement Film 2019, Page 1319

Ingress/Egress Esm't. Film 1994, Page 671

Ingress/Egress Esm't. Film 1564, Page 691

Access Control except One Opening

N0°54'41"W 356.30'

249.30'

S82°17'45"E 10.12'

N0°54'41"W 416.46'

N0°54'41"W 262.05'

℄ 20' Util. Esm't.

Waterline Easement

Complete Access Control 320'

Street Dedication N87°40'54"E 202.20'

68.54' N89°10'54"E

S0°42'31"E 221.99'

RESERVE "D"

N0°42'31"W 250.02'

20' Utility Easement

Δ=70°47'02" 258.31' R. 319.12'

Δ=70°47'02" 185.50' R. 229.88'

N19°35'29"W

124.50'

200.56'

S86°31'45"E 330.00'

60.00' N89°10'54"E

Complete Access Control 300'

Complete Access Control 142'

Complete Access Control 100'

Access Control except One Opening 85'

Drainage Easement

20' Utility Easement

10.48' N89°05'19"E

10.48' N89°05'19"E

20' Utility Easement

20' Utility Easement

N89°05'19"E 1119.19'

N89°05'19"E 290'

N89°05'19"E 107'

N89°05'19"E 207'

N89°05'19"E 139.39'

N89°05'19"E 95.05'

N89°05'19"E 3.24.54' HWY

N89°05'19"E 160'

N89°05'19"E 188'

N89°05'19"E 83'

N89°05'19"E 105'

N89°05'19"E 5'

N89°05'19"E 30'

N89°10'54"E 105.02'

N89°10'54"E 5'

N89°10'54"E 30'

N89°10'54"E 60'

N89°10'54"E 85'

N89°10'54"E 80'

N89°10'54"E 100'

N89°10'54"E 65'

N89°10'54"E 50'

N89°10'54"E 75'

N89°10'54"E 75'

N89°10'54"E 75

LOT SPLIT

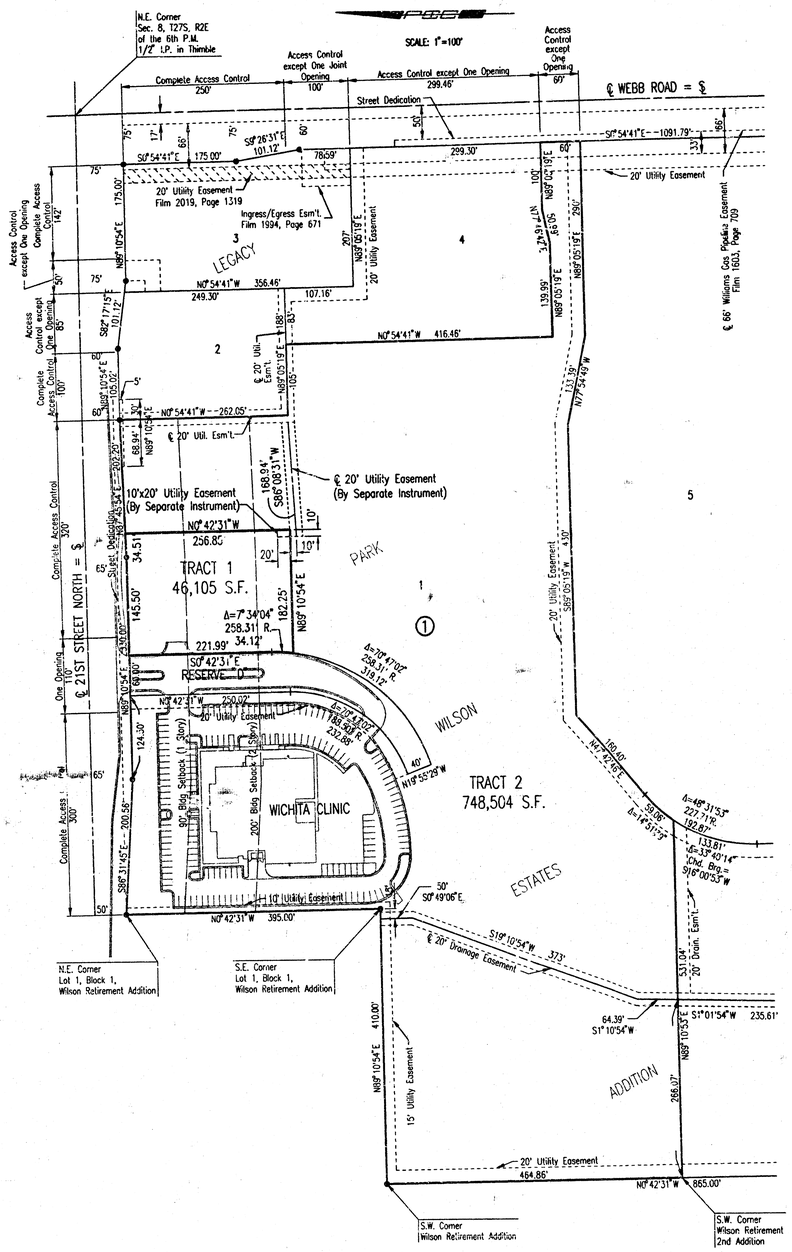

DSNR: SAD OPER: CSL SCALE: 1=100.00
C:\2001\01116\SS\LOT SPLIT 04-23-2001 08:22:09 am

No.	Revision	By	Date

CITY OF WICHITA, KANSAS
MICHAEL E. LINDEBAK, P.E.- CITY ENGINEER
PIERSON DENTAL AT LEGACY PARK WILSON ESTATES ADDITION

LOT SPLIT

PRIVATE PROJECT NO. 1111 PPS (907861)

Professional Engineering Consultants, P.A.
303 S. TOPEKA • WICHITA, KANSAS 67202
316-262-2691 • FAX 316-262-3003

Designed by	MDK, KJW	Job No.	34-01116
Drawn by		Date	March 2001

Sht. 4 of 8

N-16,847.1710, E-18,261.6910
Sta. 0+00.0 *
Core existing concrete MH wall and Install New 8" Pipe. Seal new 8" Pipe to MH with an approved waterstop gasket and non-shrink grout. Construct a minimum of 3" Reinforced Concrete Encasement MH wall. Reshape MH floor to provide smooth flow. This work shall be considered subsidiary to the price bid for pipe in place.

N-16,840.8389, E-18,064.2053
Sta. 1+97.59
Const. MH 1
Standard MH

LEGACY PARK
WILSON ESTATES ADDITION
1
①

Exist. 8" Sanitary Sewer SS

℄ 20' Util. Easm't.

℄ 20' Util. Easm't. (by separate instrument)

Traffic Control Box 500417

2

①

LEGACY PARK
WILSON ESTATES ADDITION

Install 197.59 L.F. 8" Pipe

20' Building Setback per CUP 02201

PROPOSED BUILDING
FFE=208.0

FOR PLAT COORDINATES
SEE SHEET NO. 3

SCALE:
0 20 40
PLAN: LAT. & LONG.
PROFILE: HORIZ. SAME AS ABOVE
VERT.

RECORD DRAWING
AS BUILT

① ② DENOTES SEWER SERVICE. SEE SHEET NO. 8 FOR SEWER SERVICE SCHEDULE AND DETAILS.

KURT J. WILSON
LICENSED
16837
04/23/01
KANSAS
PROFESSIONAL ENGINEER

PLAN | CHECKED | CHECKED | BY | DATE

SANITARY SEWER LINE NO. 1

PROFILE | CHECKED | CHECKED | BY | DATE

Existing MH1
Top Elev.= 204.0
℄ Out= 189.39 (E)
℄ In= 189.59 (W)

Existing Ground

Prop. Ground (by others)

MH 1
Top Elev.= 205.6

℄ In = 190.68
from 4" Service Connection (NW)

℄ Out= 190.38

197.59 L.F. 8" Pipe
@ 0.40%

220 215 210 205 200 195 190 185 180

0+00 1+00 2+00

DSN#: SAD OPER: CSL SCALE: 1=20.00
Q:\2001\01116\SS\Sepp01 04-23-2001 08:22:41 am

CITY OF WICHITA, KANSAS
MICHAEL E. LINGERK, P.E. - CITY ENGINEER
PIERSON DENTAL AT LEGACY PARK WILSON ESTATES ADDITION

SANITARY SEWER LINE NO. 1

PRIVATE PROJECT NO. 1111 PPS (607861)

Professional Engineering Consultants, P.A.
303 S. TOWNE A VE • WICHITA, KANSAS 67202
316-262-2691 • FAX 316-262-3003

Designed By WDK, KJW | Job No. 34-01116
Drawn By CSL | Date March 2001

Sheet 5 of 8

SEWER APPURTENANCES DETAILS

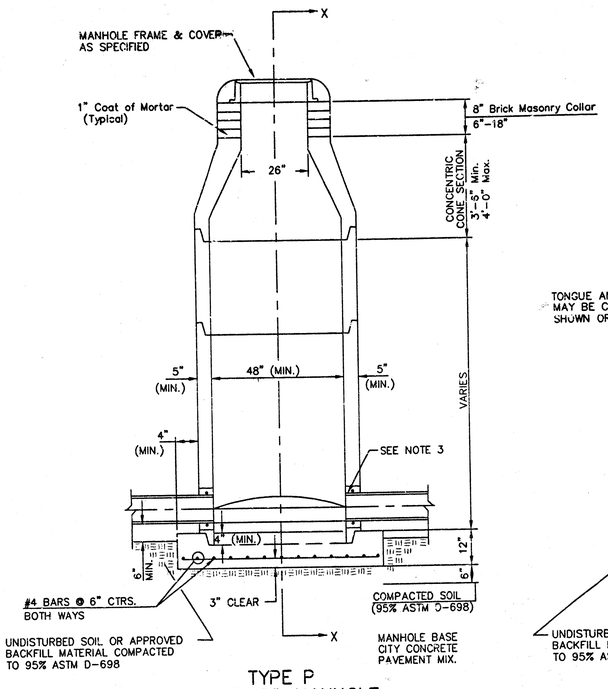

TYPE P
STANDARD MANHOLE

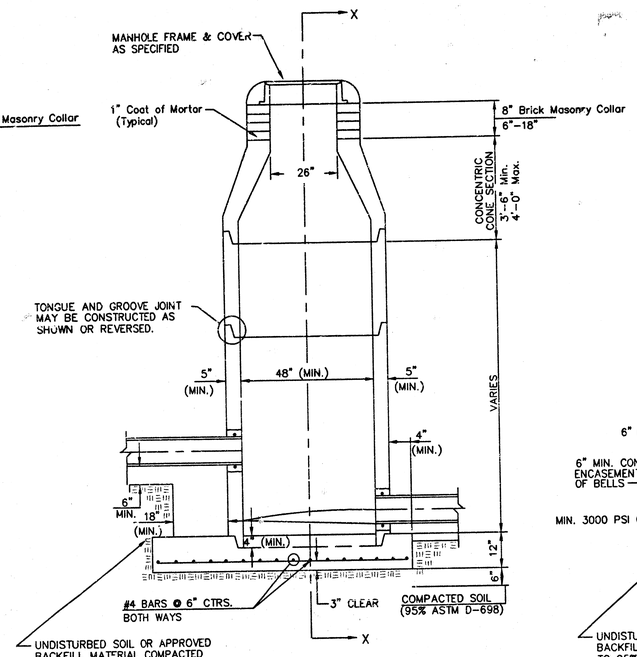

TYPE P
INSIDE DROP MANHOLE

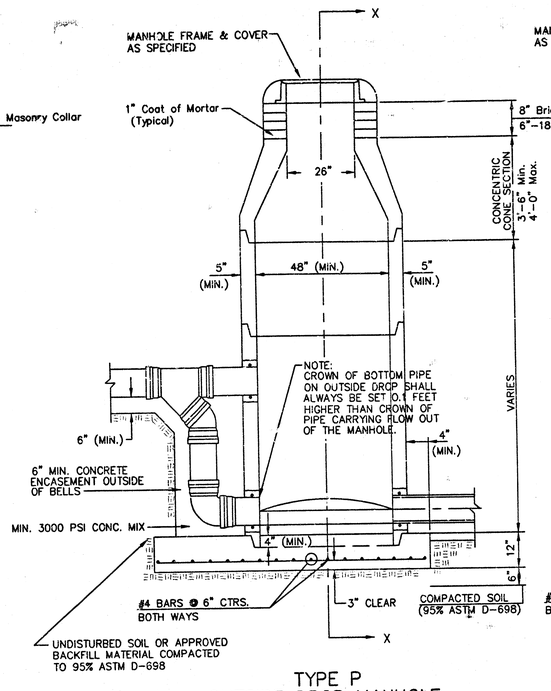

TYPE P
OUTSIDE DROP MANHOLE

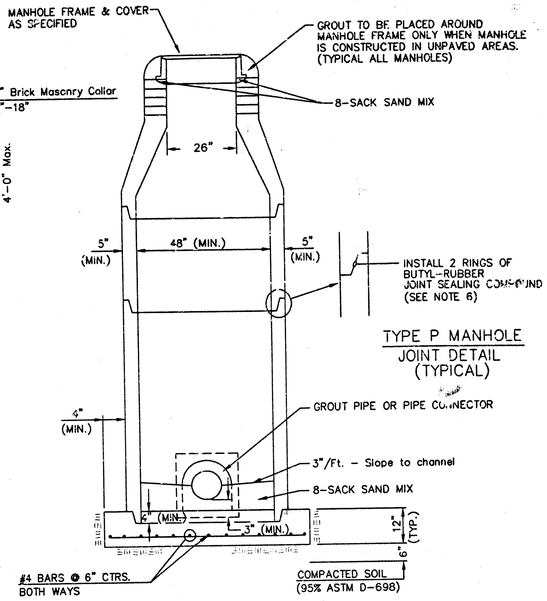

SECTION X
(TYPICAL)

GENERAL NOTES

PRECAST MANHOLE NOTES

1. ALL PRECAST CONCRETE MANHOLE SECTIONS SHALL CONFORM TO THE LATEST REVISIONS OF A.S.T.M. C478 AS MODIFIED BY THE SPECIFICATIONS.
2. NON-SHRINK GROUT SHALL BE NON-METALLIC TYPE.
3. APPROVED FLEXIBLE WATERSTOP GASKETS SHALL BE INSTALLED TO JOIN THE SEWER TO THE MANHOLE WALL WHEN A.B.S. COMPOSITE PIPE OR P.V.C. PIPE IS USED. FOR OTHER TYPES OF PIPE THE SEWER SHALL BE GROUTED IN PLACE WITH NON-SHRINK GROUT. THE SEWER PIPE SHALL BE SUPPORTED WITH CONCRETE ENCASEMENT A MINIMUM OF 3 FEET FROM THE MANHOLE WALL AND TO THE FIRST JOINT FOR V.C.P. SUCH THAT THE JOINT REMAINS FLEXIBLE.
4. ALL INSIDE SURFACES OF THE CONCRETE MANHOLE WHICH WOULD BE EXPOSED TO SEWER GAS SHALL BE COATED WITH 2 COATS TNEMEC SERIES 66 HI-BUILD EPOXOLINE, DRY THICKNESS OF 8 MILS (MIN.)
5. EXTERIOR MANHOLE WALLS SHALL BE COATED WITH 1 COAT MOBILARMA 633 BITUMINOUS COATING.
6. JOINT SEALING COMPOUND SHALL BE KENT SEAL NO. 2 OR APPROVED EQUAL.
7. PRECAST MANHOLES SHALL BE SET AT LEAST 4 INCHES INTO THE MANHOLE BASE.
8. TOP OF MANHOLE FLOOR SLAB SHALL BE AT LEAST 3 INCHES BELOW THE FLOW LINE OF THE OUTLET PIPE TO INSURE SUFFICIENT MINIMUM THICKNESS OF SHAPED INVERT.
9. LIFTING HOLES SHALL BE FILLED WITH NON-SHRINK GROUT AND THE INTERIOR SURFACE COATED AS SPECIFIED.
10. MORTAR USED IN MASONRY CONSTRUCTION SHALL CONTAIN 8 SACKS OF CEMENT PER CUBIC YARD. CONCRETE USED IN MANHOLE BASES SHALL CONFORM TO THE REQUIREMENTS OF CONCRETE FOR CONCRETE PAVEMENT CONSTRUCTION AS SPECIFIED IN THE CITY STANDARD PAVING SPECIFICATIONS USING CITY CONCRETE PAVEMENT MIX WITHOUT AIR ENTRAINING ADMIXTURE. MORTAR SHALL BE PLACED AROUND THE MANHOLE RING AS SHOWN ON THE DRAWINGS WHEN MANHOLES ARE CONSTRUCTED IN UNPAVED AREAS. MANHOLES CONSTRUCTED WHERE PIPE SIZES ARE SMALLER THAN 24" SHALL HAVE AN INSIDE DIAMETER OF 4'. MANHOLES CONSTRUCTED WHERE PIPE SIZES ARE 24" OR LARGER SHALL HAVE AN INSIDE DIAMETER OF 5'. COMPLETED MANHOLE SHALL BE WITHOUT LEAKS AND WATER TIGHT.
11. REINFORCING STEEL SHALL BE INSTALLED IN THE MANHOLE BASES AND SHALL CONSIST OF NO. 4 BARS PLACED ON 6" CENTERS IN BOTH DIRECTIONS. THE MANHOLE BASE REINFORCEMENT SHALL BE PLACED AT LEAST 3" ABOVE THE BOTTOM OF THE MANHOLE BASE. ALL COSTS FOR FURNISHING AND INSTALLING REINFORCING STEEL SHALL BE INCLUDED IN THE UNIT PRICE BID FOR THE MANHOLE.
12. OPENINGS SHALL BE CUT INTO THE MANHOLE WALL WHEN OUTSIDE DROPS ARE CONSTRUCTED ON EXISTING MANHOLES. SUCH OPENINGS CUT INTO EXISTING MANHOLES SHALL BE AS SMALL AS PRACTICAL TO FACILITATE INSTALLING AND GROUTING THE NEW PIPE IN PLACE. WATERSTOP GASKETS SHALL BE USED WITH P.V.C. AND A.B.S. COMPOSITE PIPE. THE NEW PIPE SHALL BE GROUTED INTO THE OPENING USING AN APPROVED NONSHRINK GROUT FOR THE FULL MANHOLE WALL THICKNESS. THE EXTERIOR OF THE COMPLETED CONNECTION SHALL BE SEALED WITH AN APPROVED BITUMINOUS COATING SUCH THAT THE CONNECTION WILL BE WATER TIGHT. FLOOR OF MANHOLE SHALL BE MODIFIED TO FORM NEW FLOW CHANNEL FOR THE NEW CONNECTION AS INDICATED BY THE DRAWING. THIS WORK, INCLUDING MODIFICATION OF MANHOLE FLOOR, SHALL BE PAID FOR AT THE UNIT PRICE BID FOR OUTSIDE DROP STACK CONSTRUCTED ON EXISTING MANHOLE.
13. THE FLOORS OF ALL MANHOLES SHALL BE SHAPED WITH FLOW CHANNELS SUCH THAT THE MANHOLES WILL BE SELF CLEANING AND FREE OF AREAS WHERE SOLIDS COULD BE DEPOSITED AS SEWAGE FLOWS THROUGH THE MANHOLE FROM ALL INLET PIPES TO THE OUTLET PIPE. FLOW CHANNELS SHALL BE FORMED TO MATCH THE BOTTOM HALVES OF THE INFLOWING PIPES AND THE OUTFLOWING PIPE AS SHOWN BY THE DRAWINGS EXCEPT FOR INSIDE DROP MANHOLES. FLOW CHANNELS FOR INSIDE DROP MANHOLES SHALL BE CONSTRUCTED AS INDICATED BY THE DRAWING. MANHOLE FLOORS SHALL HAVE SLOPES OF 3 INCHES PER FOOT IN THE AREAS OUTSIDE OF THE FLOW CHANNELS SLOPED TOWARD THE FLOW CHANNELS. PIPES LAID THROUGH MANHOLES SHALL HAVE THE TOP HALF REMOVED TO NEAT LINES FOR THE FULL INSIDE DIAMETER OF THE MANHOLE. MANHOLE FLOORS SHALL THEN BE SHAPED AROUND THE BOTTOM HALF OF THE PIPE WHICH FORMS THE FLOW CHANNEL.
14. PIPES INSTALLED WITHIN THE EXCAVATION MADE FOR THE MANHOLE SHALL BE CRADLED WITH CONCRETE TO THE LIMITS OF THE MANHOLE EXCAVATION. WHEN CLAY PIPE IS USED, THE CRADLE SHALL EXTEND TO THE FIRST JOINT OUTSIDE THE MANHOLE. THE CRADLE SHALL BE TERMINATED AT THE CLAY PIPE JOINT IN A MANNER WHICH WILL MAINTAIN THE FLEXIBILITY OF THE JOINT. COST OF CRADLE WITHIN MANHOLE EXCAVATION OR TO CLAY PIPE JOINTS ADJACENT TO MANHOLE SHALL BE INCLUDED IN THE UNIT PRICE BID FOR THE MANHOLE.
15. MANHOLE COVER CASTINGS AND MANHOLE FRAME CASTINGS SHALL CONFORM TO THE REQUIREMENTS AS INDICATED IN THE STANDARD SPECIFICATIONS AND AS SHOWN IN THE STANDARD DETAIL DRAWING.
16. THE VERTICAL DROP IN INSIDE DROP MANHOLES SHALL NOT EXCEED 2' FOR INFLOWING PIPES SIZED 12" OR SMALLER AND 2' FOR INFLOWING PIPES LARGER THAN 12". THE CROWNS OF INFLOWING PIPES SHALL NEVER BE SET LOWER THAN THE CROWN OF THE OUTFLOWING PIPE.
17. STANDARD MANHOLES AND STANDARD INSIDE DROP MANHOLES SHALL BE BID AS STANDARD MANHOLES FOR THE TYPE AND DIAMETER INDICATED. OUTSIDE DROP MANHOLES SHALL BE BID AS STANDARD OUTSIDE DROP MANHOLES FOR THE TYPE AND DIAMETER INDICATED. ALL MANHOLE DIAMETERS WILL BE 4' UNLESS INDICATED OTHERWISE.
18. A BRICK MASONRY COLLAR SHALL BE INSTALLED BETWEEN THE CAST IRON FRAME AND THE CONCENTRIC CONE. THE COLLAR WILL HAVE 8" WALLS AND A VERTICAL HEIGHT OF 6" MINIMUM AND 18" MAXIMUM. A 1" COAT OF MORTAR WILL BE PLASTERED ON THE OUTSIDE OF THE COLLAR. THE USE OF PRE-CAST CONCRETE SPACERS FOR MANHOLE TOP ADJUSTMENT IS ALSO ALLOWED.

RECORD DRAWING
20 JUNE 01

THE CITY OF WICHITA

CITY ENGINEER'S OFFICE
CITY HALL - SEVENTH FLOOR
455 NORTH MAIN STREET
WICHITA, KANSAS 67202
(316) 268-4601
(316) 268-4114 FAX

STANDARD TYPE 'P' MANHOLES

M. E. LINDEBAK P.E. - CITY ENGINEER

PROJECT NUMBER	OCA NO.
1111 PPS	607861
DATE: MAR 96	SHEET 6 OF 8

DSN#: SAD OPER: CSL SCALE: 1=1.00
Q:\2001\01161\mm-pdt 04-23-2001 08:23:48 am

MANHOLE FRAME AND COVER DETAIL

ADOPTED AS STANDARD DESIGN BY
CITY OF WICHITA, KANSAS

MANHOLE COVER
Weight = 180 Lbs.

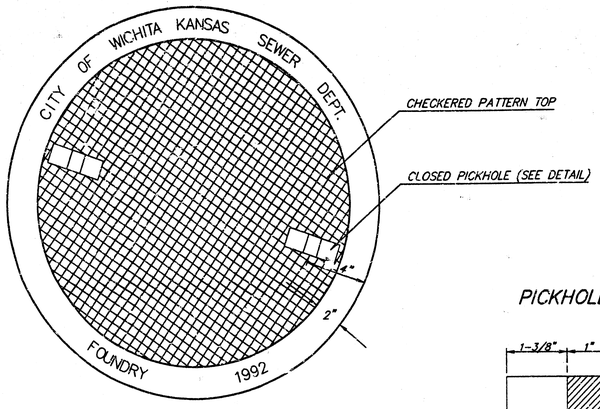

TOP VIEW

PICKHOLE DETAIL

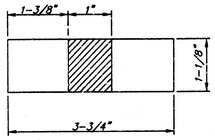

TOP VIEW

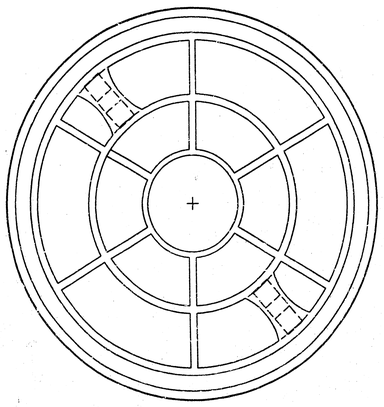

BOTTOM VIEW

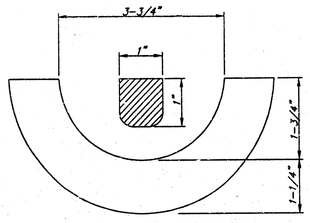

SECTION VIEW

MANHOLE FRAME
Weight = 240 Lbs.

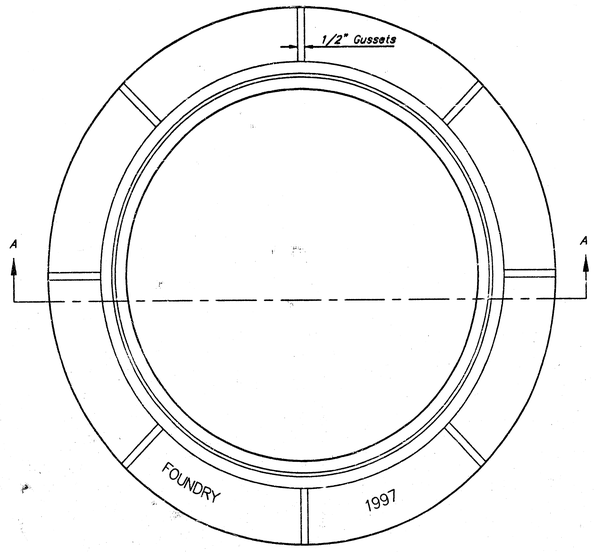

TOP VIEW

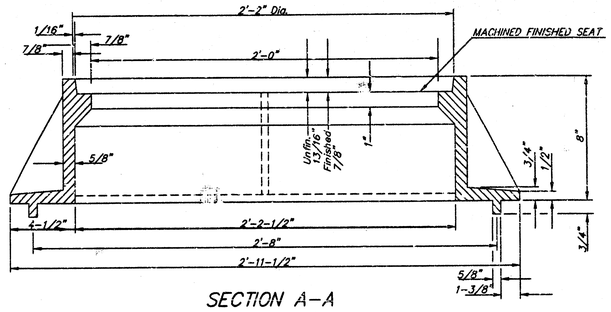

SECTION A-A
MUD RING

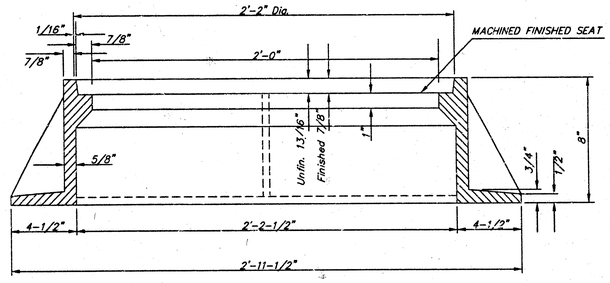

SECTION A-A

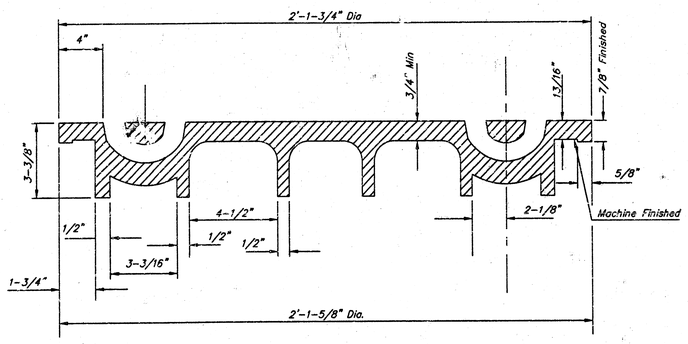

SECTION VIEW

GENERAL NOTES

1. MANHOLE CASTINGS SHALL BE MANUFACTURED USING GOOD QUALITY GRAY IRON CONFORMING TO CLASS 30 OF A.S.T.M. DESIGNATION A-48. DIMENSIONS AND WEIGHTS SHOWN ON THE DETAILED DRAWINGS SHALL BE CONSIDERED AS MINIMUM REQUIREMENTS AND ANY DEVIATIONS FROM THE DIMENSIONS SHOWN MUST BE SPECIFICALLY APPROVED. THE FINISHED CASTINGS SHALL BE OF UNIFORM QUALITY, FREE FROM BLOWHOLES, POROSITY, HARD SPOTS, SHRINKAGE DISTORTIONS OR OTHER DEFECTS.
2. MANHOLE CASTINGS SHALL WEIGH A MINIMUM OF 180 POUNDS ON THE SOLID COVER AND 240 POUNDS ON THE MANHOLE RING. THIS IS A TOTAL OF 420 POUNDS ON A RING AND COVER SET. CASTINGS WEIGHING LESS THAN THE MINIMUM SPECIFICATIONS WILL NOT BE ACCEPTED.
3. MANHOLE CASTINGS SHALL BE MANUFACTURED SUCH THAT A COVER MANUFACTURED BY ANY ONE FOUNDRY WILL FIT INTERCHANGEABLY INTO A FRAME MANUFACTURED BY ANOTHER FOUNDRY AND STILL MEET ALLOWABLE CLEARANCES AND NON-ROCKING REQUIREMENTS. THIS WILL REQUIRE MANUFACTURING OF THE MATCHING FACES ON THE COVER AND THE FRAME TO CLOSE TOLERANCES.
4. THE OUTSIDE CIRCUMFERENCE OF THE VERTICAL FACE OF THE COVER AND THE INSIDE CIRCUMFERENCE OF THE VERTICAL FACE IN THE FRAME RECESS SHALL BE MANUFACTURED TO TOLERANCES SUCH THAT THE CLEARANCE BETWEEN THE COVER AND FRAME WILL NOT EXCEED 1/8" AT ANY POINT AROUND THE CIRCUMFERENCE OF THE COVER. THE SEATING SURFACES BETWEEN THE COVER AND FRAME SHALL BE MACHINED SUCH THAT THESE SEATING SURFACES SHALL MAKE FULL CONTACT FOR THEIR FULL CIRCUMFERENCE TO PRECLUDE THE COVER FROM ROCKING IN THE FRAME.
5. THE MANHOLE FRAME AND COVER SHALL BE MARKED WITH LETTERING INDICATING THE NAME OF THE MANUFACTURER AND THE YEAR WHEN THE COVER OR FRAME WAS CAST. THE COVER SHALL BE FURTHER IDENTIFIED WITH REGARDS TO OWNERSHIP USING LETTERS AT LEAST 1 INCH IN HEIGHT. THIS IDENTIFICATION SHALL BE "CITY OF WICHITA SEWER DEPARTMENT". THE WORD DEPARTMENT MAY BE ABBREVIATED. THE TEXTURE OF THE TOP SURFACE OF THE COVER SHALL BE MANUFACTURED IN A CHECKERED PATTERN DESIGN AS INDICATED ON THE DRAWINGS. SMOOTH BLOCKOUTS SHALL BE UTILIZED TO HIGHLIGHT THE LETTERS IN THE COVER SURFACE. THE TOTAL AREA OF SMOOTH SURFACE BLOCKOUT SHALL NOT EXCEED THE AREA INDICATED ON THE DRAWING. POSITIONING OF SMOOTH BLOCKOUTS AND LETTERING MAY VARY FROM THAT SHOWN ON THE DETAILED DRAWING.

RECORD DRAWING
20 JUNE 01

THE CITY OF WICHITA
CITY ENGINEER'S OFFICE
CITY HALL - SEVENTH FLOOR
455 NORTH MAIN STREET
WICHITA, KANSAS 67202
(316) 268-4351
(316) 268-4114 FAX

MANHOLE FRAME AND COVER

M. E. LINDEBAK P.E. - CITY ENGINEER

PROJECT NUMBER	DCA NO.
1111 PPS	607861
DATE	SHEET 7 OF 8
MAR 96	

DSNR: SAD OPER: CSL SCALE: 1=1.00
Q:\2001\01116 GSS\fm-covr 04-25-2001 06:24:07 am

VERTICAL RISER DETAILS

ADOPTED AS STANDARD DESIGN
BY
CITY OF WICHITA, KANSAS
OCTOBER 1992

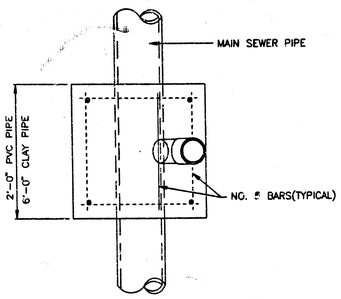

TYPICAL PLAN VIEW

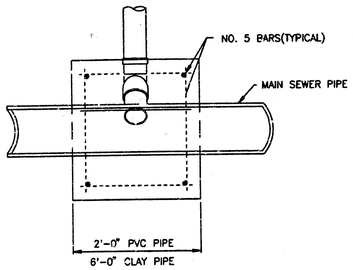

TYPICAL SECTION X-X

SEWER SERVICE TABLE										
NO.	TYPE	LOCATION				FOR INFORMATION ONLY		RECORD INFORMATION (TO BE COMPLETED BY PROJECT INSPECTOR)		NO.
		LOT NO.	BLOCK NO.	LINE NO.	STATION/ DIRECTION	APPROXIMATE LENGTH 4" PIPE		DISTANCE FROM NEAREST MANHOLE		
						VERTICAL	HORIZONTAL	UPSTREAM	DOWNSTREAM	
1	4" MH Serv. Conn	1	1	1	1+97.59 Rt.	11'	9'			1

NOTES:
1. Vertical Riser Pipe shall be extended to 2' minimum above ground water elevation and 4' maximum below proposed ground elevation.

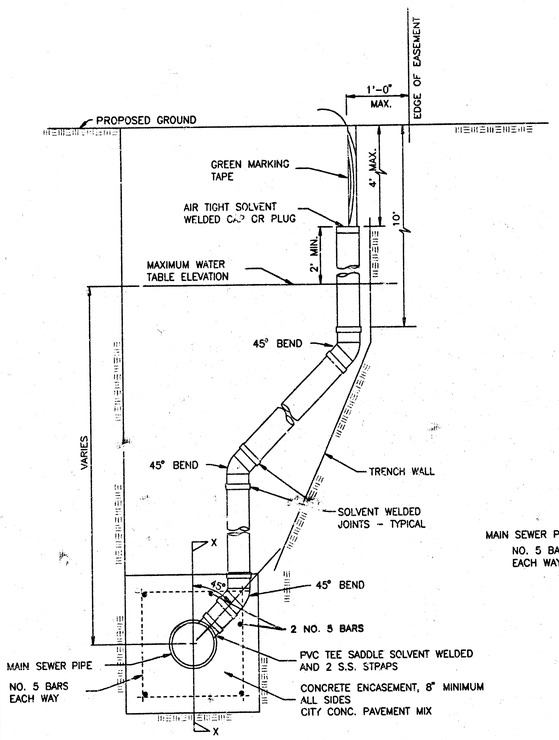

METHOD "A"

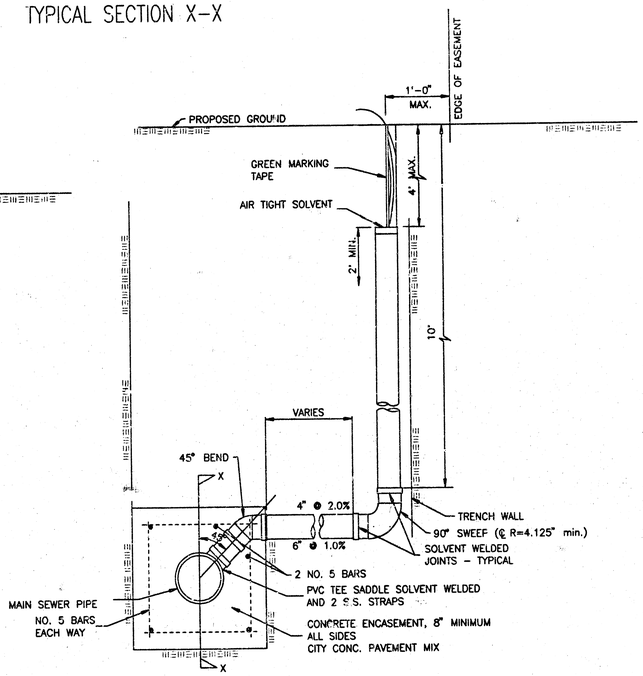

METHOD "B"

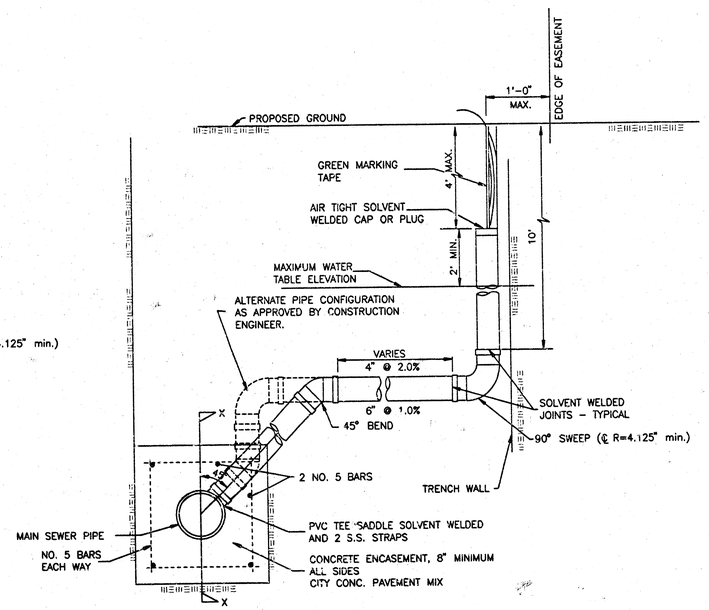

METHOD "C"

NOTE: RISER PIPE REQUIREMENTS AT MANHOLE STUBS SHALL BE SIMILAR TO THOSE SHOWN ABOVE.

GENERAL NOTES

1. RISERS. Risers shall be installed to serve all lots or tracts where the sanitary sewer main is below the water table. Risers shall also be installed to serve all lots and tracts where the sanitary sewer main depth is greater than 12 feet below the proposed ground elevation. Installation of risers because of field conditions shall be as approved by the Construction Engineer. The location of the risers to serve developed property shall be approved by the property owner and the Construction Engineer.

2. PIPE STUBS. Pipe stubs shall be installed in manholes where locations of manholes will provide satisfactory service connection as determined by the Construction Engineer. The vertical distance between the flowline of the manhole pipe stub and the flowline of the sanitary sewer main out of the manhole shall not exceed 2 feet. Risers shall be utilized at manhole pipe stubs as indicated in Note 1. Manhole pipe stubs shall be set such that the top of the stub is not lower than the top of the sanitary sewer main.

3. SIZING. Pipe stubs and risers shall be sized according to the plans and riser table where risers are indicated by the plans. Where risers or pipe stubs are required because of field conditions, the risers and stubs shall be six-inch diameter for commercial or industrial properties and 4" or 6" diameter for residential properties, based on lot size and sanitary sewer main depth. Sizing of risers and stubs shall be approved by the Construction Engineer prior to installation.

4. RISER OR STUB MATERIAL. Risers and stubs shall be constructed of Schedule 40 PVC Pipe, meeting the requirements of the latest revision of A.S.T.M. . All pipe joints shall be solvent welded.

5. REINFORCED CONCRETE ENCASEMENT. Riser connections to clay pipe sanitary sewers shall be reinforced concrete encased both ways from the riser centerline. The reinforced concrete encasement shall extend three feet from the riser centerline or stop at the first sanitary sewer pipe joint within three feet of the riser centerline. Riser connections to PVC Sanitary Sewer mains shall be reinforced concrete encased one foot each way from the riser centerline. The concrete encasement shall be reinforced using reinforcing steel as shown in the appropriate drawing. The concrete shall conform to the City Standard Specifications for concrete pavement.

6. BEDDING. Bedding around the sanitary sewer riser shall be compacted Pipe Bedding Type 1 or 2. The bedding shall be placed and compacted from the depth of the sanitary sewer main to the top of the sanitary sewer riser pipe. Compacted Pipe Bedding Type 1 or 2 shall be required for all risers whether constructed in vertical wall or sloped wall trenches. Bedding material and construction practices shall be approved by the Construction Engineer prior to installation.

7. SUPPORT OF RISERS. Sanitary sewer riser pipe shall be supported during trench backfill. The riser pipe shall be held in a vertical position at all times until trench backfill and compaction has been completed. Contractor's methods for supporting and backfilling the riser pipe shall be approved by the Construction Engineer.

8. PLUGGING. The ends of the riser pipes and manhole stubs shall be plugged using an airtight solvent welded cap or plug. Cap or plug fittings shall be approved by the Construction Engineer prior to installation. Caps or plugs which do not provide an airtight seal will not be accepted.

9. TOP OF THE RISER PIPE. The top elevation of the sanitary sewer riser pipe shall be built per plan elevations, unless otherwise directed by the Construction Engineer. Where riser elevations are not shown on the plans, the top of the risers shall be set at an elevation four feet below the proposed ground surface. If ground water is encountered, the top of the riser pipe shall be set at an elevation two (2) (min.) above the maximum water table elevation, regardless of the riser elevation shown on the plans.

10. MARKING. Locations of the ends of the sanitary sewer riser pipe shall be marked by fastening green colored plastic tape to the end of the riser. The tape shall be supported by a length of wooden 2 x 4, extending from the top of the riser pipe to the proposed ground surface. The green tape shall be visible and extend one foot above the proposed ground surface. The green tape shall be 4 mil Polyethylene film with a minimum width of three inches, specifically manufactured for the purpose of identification of underground sewers.

11. LOCATION MEASURES. The project inspector shall record and document the location of all risers constructed as measured from the nearest manhole, indicating the direction from the manhole, the direction and distance from the main, riser size, and elevation of the top of the riser.

12. RISER LOCATION. The riser shall be located per plan if shown. If not shown on the plan, the riser shall be located at the center of the lot, within one foot of the property side of the easement for the lot being served. All riser locations shall be approved by the Construction Engineer prior to installation.

13. PAYMENT. "Sanitary sewer risers" shall be paid for at the contract unit price per each, which price shall be full compensation for all pipe, fittings, marking tape, length of wooden 2 x 4, reinforced concrete encasement, support during backfill, backfill, labor, site restoration, and any other items necessary to complete the work.

"Manhole stubs" shall be paid for at the contract unit price per each, which shall be full compensation for all labor, material, and incidentals necessary to complete the work including all pipe, fittings, reinforced concrete encasement, and all other items as required and listed for "Sanitary Sewer Risers".

REVISED NOTE 4 - APRIL 98

RECORD DRAWING
ED JUNG 01

THE CITY OF WICHITA

CITY ENGINEER'S OFFICE
CITY HALL - SEVENTH FLOOR
455 NORTH MAIN STREET
WICHITA, KANSAS 67202
(316) 268-4501
(316) 268-4114 FAX

VERTICAL RISER DETAIL

W. E. LINDEBAK P.E. - CITY ENGINEER

PROJECT NUMBER	CCA NO.
1111 PPS	607861
DATE	SHEET 8 OF 8
MAR 96	

DSNR: KJW OPER: CSL SCALE: 1=1.00
Q:\2001\01116\SS\detriser 04-23-2001 08:24.31 am