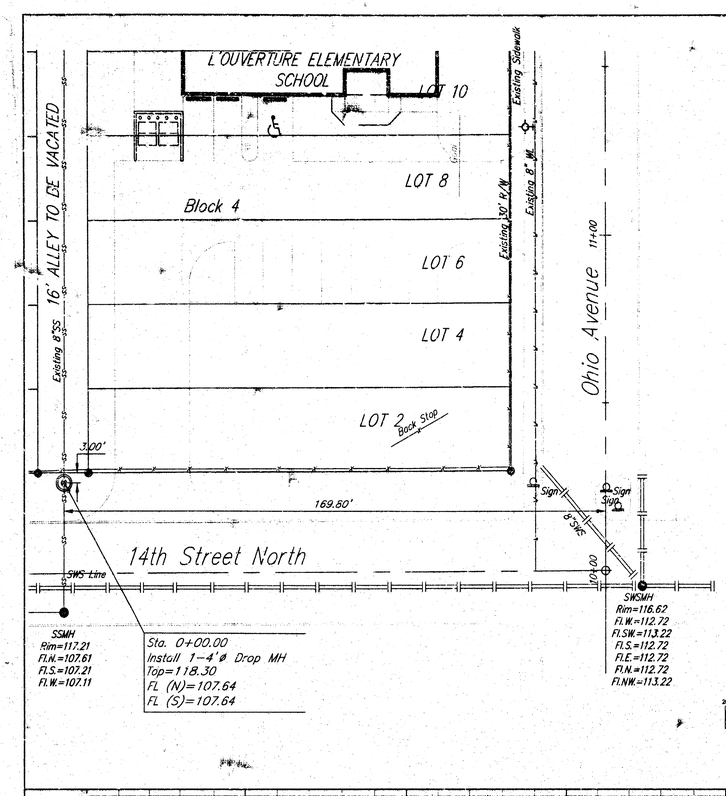

SITE BENCHMARK
"a" Chiseled on Top of W Curb 356' N of the ℄ of 14th Street and Ohio
Elevation=117.42 (City Datum)

McCullough Excavation- Contractor
Larry Crann- KE Miller- Inspector
Released 9-5-04
As-Built 7-29-04
.pdf by JDL 11/30/04

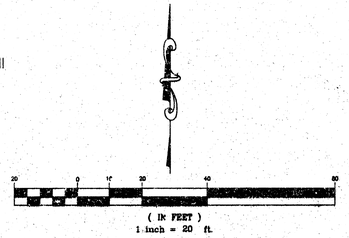

SANITARY SEWER TO SERVE
L'OUVERTURE ELEMENTARY SCHOOL

1539 OHIO AVENUE
WASHINGTON AVENUE ADDITION
BLOCK 4
1367PPS (607861)
CITY OF WICHITA, KANSAS
Neil D. Cable, P.E., City Engineer

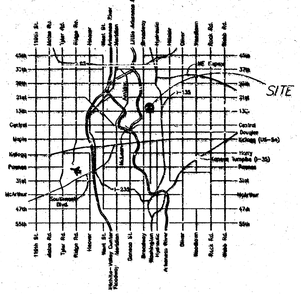

LOCATION MAP

GENERAL NOTES

1. Contractor will be required to provide notice to utility companies a minimum of twenty-four (24) hours prior to any excavation, as follows:

Kansas One-Call	687-2470

The Contractor must notify the following in case of an emergency:

Cablevision	262-4270
or	263-2061
Westar Energy	343-8650
	303-8600
Aquila Networks	
Southwestern Bell Telephone Company	1-571-2611
City of Wichita Water Department	268-4608
City of Wichita Sewer Department	268-1071
Kansas Gas Service	832-7168
or	832-7167
Aquila Networks	942-8811
or	1-800-303-0357

2. Exist. utilities and their locations, as shown on the plans, represent the best information obtainable for design. Location information has been obtained from the various utility companies and is either from company record drawings or company-provided field locations. The Contractor will be required to work around existing utilities which do not conflict with proposed construction.

3. The Contractor to verify utility locations prior to construction of this project.

4. Utility service and installation shall be coordinated with the respective utility owners. Contacts are:

Kansas Gas Service	James Stotts	831-3122
Westar Energy	Russ Chitwood	261-6251
Aquila Networks	John Stark	942-8811
Wichita Water	Paul Bryant	268-4555
	Steve Palmer	268-4608
Southwestern Bell	Jim Tohin	268-2759
Multimedia Cablevision	Mark Anaya	262-4270

5. All lawn/turf areas disturbed by construction of proposed improvements shall be restored with sod. All sodding work shall be in accordance with the City of Wichita standard specifications and the City of Wichita administrative regulation No. AR78 which governs cleanup and replacement following construction. All costs for this work shall be subsidiary to the lump sum price bid for "Site Restoration."

6. Traffic affected by the construction of this project shall be handled in accordance with the latest edition of the Manual on Uniform Traffic Control Devices.

7. All commercial signs to be moved by others prior to construction.

8. Properties within the project may have underground irrigation systems (lawn sprinklers) which conflict with the new construction. Contractor shall remove such components as needed during construction of the project. The irrigation system shall be reinstalled in like kind before project completion. Any irrigation system modifications required because of projects improvements shall be coordinated with the property owner. Portions of underground irrigation systems not in conflict with construction shall be protected from damage and shall remain in place. All work related to underground irrigation/sprinklers shall be subsidiary to Site Restoration.

9. Cuts made to paved surfaces on public property will be repaired by the City's contractor and charged against the owner / applicant. Unit repair Prices are available from the City at 268-4418. A surcharge may be applicable: Call 268-4118 for details. Repair costs to be paid prior to release of water Service if water service is affected.

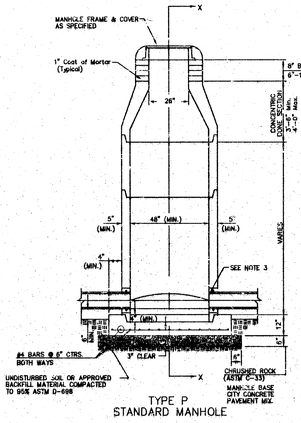

TYPE P
STANDARD MANHOLE

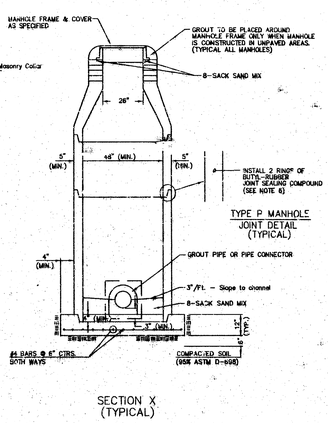

SECTION X
(TYPICAL)

AS-BUILT
7/29/04
Date
Signature

APPROVED AS NOTED

Sanitary Sewers VRH 8/22/03

NOTE TO CONTRACTORS

Installation, inspection and testing for this project is to be provided by a Licensed Consulting Engineering Firm under contract with the Owner/Developer. Said inspection to be in accordance with the City of Wichita standard construction engineering practices and certified by a Licensed Professional Engineer. No work shall be performed in dedicated easements or public right-of-way by the Contractor without such inspection nor shall any work be commenced without written authorization by the City Engineer. All Construction and Materials shall comply with the City of Wichita Specifications and Standards (on file and available in the City Engineer's Office).

GENERAL NOTES
PRECAST MANHOLE NOTES

1. ALL PRECAST CONCRETE MANHOLE SECTIONS SHALL CONFORM TO THE LATEST REVISIONS OF A.S.T.M. C478 AS MODIFIED BY THE SPECIFICATIONS.
2. NON-SHRINK GROUT SHALL BE NON-METALLIC TYPE.
3. APPROVED FLEXIBLE BALL-&-TUP GASKETS SHALL BE INSTALLED TO JOIN THE SEWER TO THE MANHOLE WALL WHEN A.B.S. COMPOSITE PIPE OR P.V.C. PIPE IS USED. FOR OTHER TYPES OF PIPE THE SEWER SHALL BE GROUTED IN PLACE WITH NON-SHRINK GROUT. THE SEWER PIPE SHALL BE SUPPORTED WITH CONCRETE ENCASEMENT A MINIMUM OF 2 FEET FROM THE MANHOLE WALL AND TO THE FIRST JOINT FOR V.C.P. SUCH THAT THE JOINT REMAINS FLEXIBLE.
4. ALL INSIDE SURFACES OF THE CONCRETE MANHOLE WHICH WOULD BE EXPOSED TO SEWER GAS SHALL BE COATED WITH 2 COATS THEMEC SERIES 66 HI-BUILD (EPOXOLINE), DRY THICKNESS OF 8 MILS (MIN.)
5. EXTERIOR MANHOLE WALLS SHALL BE COATED WITH 1 COAT MORELASKA 643 BITUMINOUS COATING.
6. JOINT SEALING COMPOUND SHALL BE KENT SEAL NO. 2 OR APPROVED EQUAL.
7. PRECAST MANHOLES SHALL BE SET AT LEAST 4 INCHES INTO THE MANHOLE BASE.
8. TOP OF MANHOLE FLOOR SLAB SHALL BE AT LEAST 3 INCHES BELOW THE FLOW LINE OF THE OUTLET PIPE TO INSURE SUFFICIENT MINIMUM THICKNESS OF SHAPED INVERT.
9. LIFTING HOLES SHALL BE FILLED WITH NON-SHRINK GROUT AND THE INTERIOR SURFACE COATED AS SPECIFIED.
10. MORTAR USED IN MASONRY CONSTRUCTION SHALL CONTAIN 6 SACKS OF CEMENT PER CUBIC YARD. CONCRETE USED IN MANHOLE BASES SHALL CONFORM TO THE REQUIREMENTS OF CONCRETE FOR CONCRETE PAVEMENT CONSTRUCTION AS SPECIFIED IN THE CITY STANDARD PAVING SPECIFICATIONS. A MINIMUM OF 1 BAG OF MORTAR MIX PER MANHOLE FOR EXTERNAL CONNECTIONS (MORTAR MIX) SHALL BE PLACED AROUND THE MANHOLE RING AS SHOWN ON THE DRAWING WHEN MANHOLES ARE CONSTRUCTED IN UNPAVED AREAS. MANHOLES CONSTRUCTED WHERE PIPE SIZES ARE SMALLER THAN 24" SHALL HAVE AN INSIDE DIAMETER OF 4'. MANHOLES CONSTRUCTED WHERE PIPE SIZES ARE 24" OR LARGER SHALL HAVE AN INSIDE DIAMETER OF 6'. COMPLETED MANHOLE SHALL BE WITHOUT LEAKS AND WATER TIGHT.
11. REINFORCING STEEL SHALL BE INSTALLED IN THE MANHOLE BASES AND SHALL CONSIST OF 1-D. 4 BARS PLACED ON 6" CENTERS IN BOTH DIRECTIONS. THE MANHOLE BASE REINFORCEMENT SHALL BE PLACED AT LEAST 3" ABOVE THE BOTTOM OF THE MANHOLE BASE. ALL COSTS FOR FURNISHING AND INSTALLING REINFORCING STEEL SHALL BE INCLUDED IN THE UNIT PRICE BID FOR THE MANHOLE.
12. OPENINGS SHALL BE CUT INTO THE MANHOLE WALL WHEN OUTSIDE DROPS ARE CONSTRUCTED ON EXISTING MANHOLES. SUCH OPENINGS CUT INTO EXISTING MANHOLES SHALL BE AS SMALL AS PRACTICAL TO FACILITATE INSTALLING AND GROUTING THE NEW PIPE IN PLACE. WATERSTOP GASKETS SHALL BE USED WITH P.V.C. AND A.B.S. COMPOSITE PIPE. THE NEW PIPE SHALL BE GROUTED INTO THE OPENING USING AN APPROVED NONSHRINK GROUT FOR THE FULL MANHOLE WALL THICKNESS. THE EXTERIOR OF THE COMPLETED CONNECTION SHALL BE SEALED WITH AN APPROVED BITUMINOUS COATING SUCH THAT THE CONNECTION WILL BE WATER TIGHT. FLOOR OF MANHOLE SHALL BE MODIFIED TO FORM NEW FLOW CHANNEL TO INCLUDE SUCH CONNECTION. ALL COSTS FOR THE DRAINING, FLOW CHANNEL MODIFICATION OF MANHOLE FLOOR, ETC. SHALL BE PAID FOR AT THE UNIT PRICE BID FOR OUTSIDE DROP STACK CONSTRUCTED ON EXISTING MANHOLE.
13. THE FLOORS OF ALL MANHOLES SHALL BE SHAPED WITH FLOW CHANNELS SUCH THAT THE MANHOLES WILL BE SELF CLEANING AND FREE OF AREAS WHERE SOLIDS COULD BE DEPOSITED AS SEWAGE FLOWS THROUGH THE MANHOLE FROM THE INLET PIPES TO THE OUTLET PIPE. FLOW CHANNELS SHALL BE FORMED TO MATCH THE BOTTOM HALVES OF THE INFLOWING PIPES AND THE OUTGOING PIPE. THE INVERT OF THE OUTGOING PIPE SHALL BE LOWERED TO PROVIDE FLOW CHANNELS FOR INCREASED FLOW. MANHOLES SHALL BE CONSTRUCTED AS INDICATED BY THE DRAWING. MANHOLE FLOORS SHALL HAVE SLOPES OF 3 INCHES PER FOOT IN THE AREAS OUTSIDE OF THE FLOW CHANNELS SLOPED TOWARD THE FLOW CHANNELS. PIPES LAID THROUGH MANHOLES SHALL HAVE THE TOP HALF REMOVED TO HEAT LINES FOR THE FULL INSIDE DIAMETER OF THE MANHOLE. MANHOLE FLOORS SHALL THEN BE SHAPED AROUND THE BOTTOM HALF OF THE PIPE WHICH FORMS THE FLOW CHANNEL.
14. PIPES INSTALLED WITHIN THE EXCAVATION MADE FOR THE MANHOLE SHALL BE CRADLED WITH CONCRETE TO THE LINE OF THE MANHOLE EXCAVATION. WHEN CLAY PIPE IS USED THE CRADLE SHALL EXTEND TO THE FIRST JOINT OUTSIDE THE MANHOLE. THE CRADLE SHALL BE TERMINATED AT THE CLAY PIPE JOINT IN A MANNER WHICH WILL MAINTAIN THE FLEXIBILITY OF THE JOINT. COST OF CRADLE WITHIN MANHOLE EXCAVATION OR TO CLAY PIPE JOINTS ADJACENT TO MANHOLE SHALL BE INCLUDED IN THE UNIT PRICE BID FOR THE MANHOLE.
15. MANHOLE COVER CASTINGS AND MANHOLE FRAME CASTINGS SHALL CONFORM TO THE REQUIREMENTS AS INDICATED IN THE STANDARD SPECIFICATIONS AND AS SHOWN IN THE STANDARD DETAIL DRAWING.
16. THE VERTICAL DROP IN INSIDE DROP MANHOLES SHALL NOT EXCEED 3' FOR INFLOWING PIPES SIZED 12" OR SMALLER AND 2' FOR INFLOWING PIPES LARGER THAN 12". THE STUBBING OF INFLOWING PIPES SHALL NEVER BE SET LOWER THAN THE CROWN OF THE OUTFLOWING PIPE.
17. STANDARD MANHOLES AND STANDARD INSIDE DROP MANHOLES SHALL BE SIZED AS STANDARD MANHOLES FOR THE TYPE AND DIAMETER INDICATED. OUTSIDE DROP MANHOLES SHALL BE SIZED AS STANDARD OUTSIDE DROP MANHOLES FOR THE TYPE AND DIAMETER INDICATED. ALL MANHOLE DIAMETERS WILL BE 4' UNLESS INDICATED OTHERWISE.
18. A BRICK MASONRY COLLAR SHALL BE INSTALLED BETWEEN THE CAST IRON FRAME AND THE CONCENTRIC CONE. THE COLLAR WILL HAVE 8" WALLS AND A MINIMUM HEIGHT OF 8" MINIMUM AND 18" MAXIMUM. A COAT OF MORTAR WILL BE PLACED ON THE OUTSIDE OF THE COLLAR. THE USE OF PRE-CAST CONCRETE SPACERS FOR MANHOLE TOP ADJUSTMENT IS ALSO ALLOWED.
18. CRUSHED ROCK CONFORMING TO ASTM C-33 WITH A GRADATION OF NO. 67 SHALL BE INSTALLED AT THE BASE OF THE MANHOLE TO A DEPTH OF NO LESS THAN 6", AND SHALL EXTEND NO LESS THAN 6" OUTSIDE THE DIAMETER OF THE CONCRETE FLOOR OF THE MANHOLE.

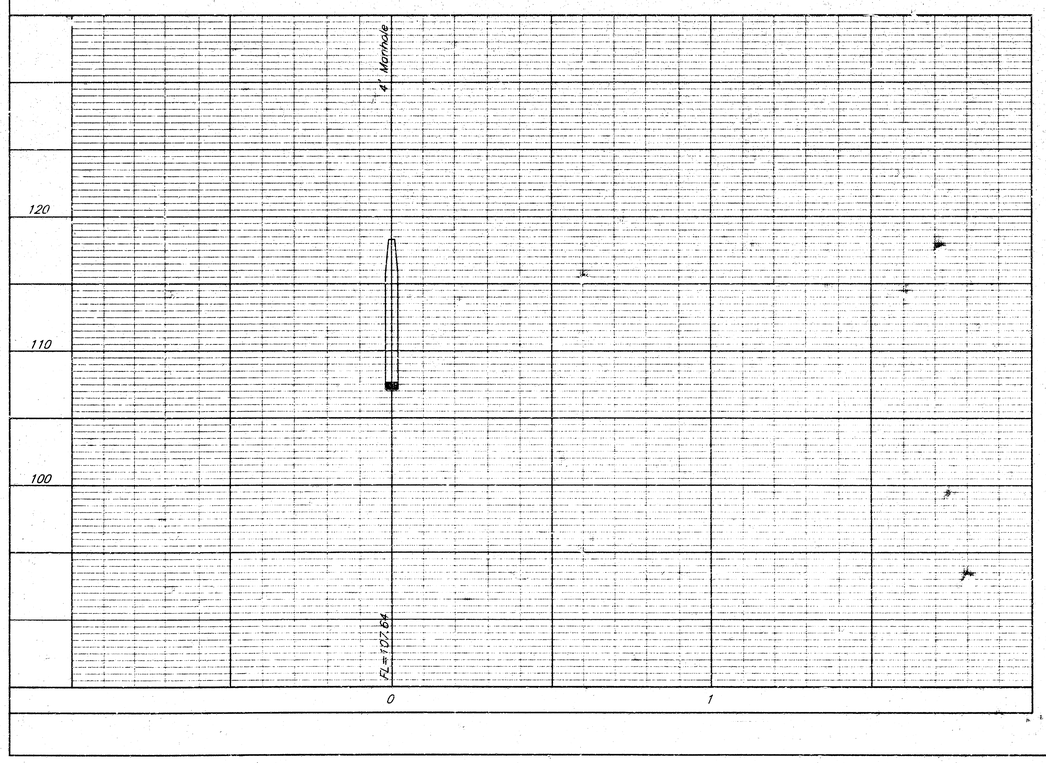

kemiller engineering
516 S. Market, Wichita, KS 67202 316/264-0242

Architects
1133 E. 2nd St.
Wichita, KS 67214
316.262.7400

KEVIN E. MILLER
11282
8-1-03
KANSAS
PROFESSIONAL ENGINEER

L'OUVERTURE ELEMENTARY
BOND ADDITION AND RENOVATIONS
USD #259
WICHITA, KANSAS

Revisions:

Proj no: PK259G2101
Date: 6-12-03
Sheet title:

Drawn by: TO
Checked by:

CV5

of

16 of 22