SANITARY SEWER RELOCATION TO SERVE
LOWE'S ADDITION

Private Project Number
731 PPS (607861)

CITY OF WICHITA, KANSAS
Michael E. Lindebak, P.E. City Engineer

GENERAL NOTES:

1. Contractor will be required to provide notice to utility companies a minimum of twenty-four (24) hours prior to any excavation, as follows:

   Kansas One-Call 687-2470

   The Contractor must notify the following in case of an emergency:

Cablevision	262-4270
or	263-2061
K.P.L. Gas Service Company	263-7511
Kansas Gas & Electric Company	264-1141
Arkla Gas Company	942-8350
or	263-8161
Southwestern Bell Telephone Company	1-571-2611
City of Wichita Water Department	268-4908
City of Wichita Sewer Maintenance	268-4071

2. Underground utility service lines and overhead utility pole lines are to be adjusted as necessary by others prior to construction unless the plans specifically call for their adjustment by the Contractor or unless the plans specifically identify a utility to be adjusted by its owner during construction. Existing utilities and their location, as shown on the plans, represent the best information obtainable for design. The Contractor will be required to work around existing utilities within the right-of-way which do not conflict with proposed construction.

3. The Contractor shall notify pipeline companies at least 24 hours in advance of any work being performed across and/or adjacent to pipelines.

4. Trees and shrubs in public right-of-way which are in direct conflict with proposed new construction shall be removed by the Contractor with the Engineer's approval. Trees and shrubs which are not in direct conflict with proposed new construction shall be saved and protected from damage.

5. The Contractor shall be responsible for maintaining continuous flow of sewage through construction. Contractor's proposed method for maintaining sewage flow shall be approved by the Engineer. Cost of maintaining flow of sewage through construction will not be paid for directly and this cost shall be considered as subsidiary to the other pay items of work.

6. All areas disturbed by construction operations shall by seeded with rye grass at a rate of 300 lbs/acre immediately following construction in that area.

7. Contractor shall not start work on the project until the project inspector is assigned to the project and is present on the site. Any work done without inspection will be required to be uncovered for inspection.

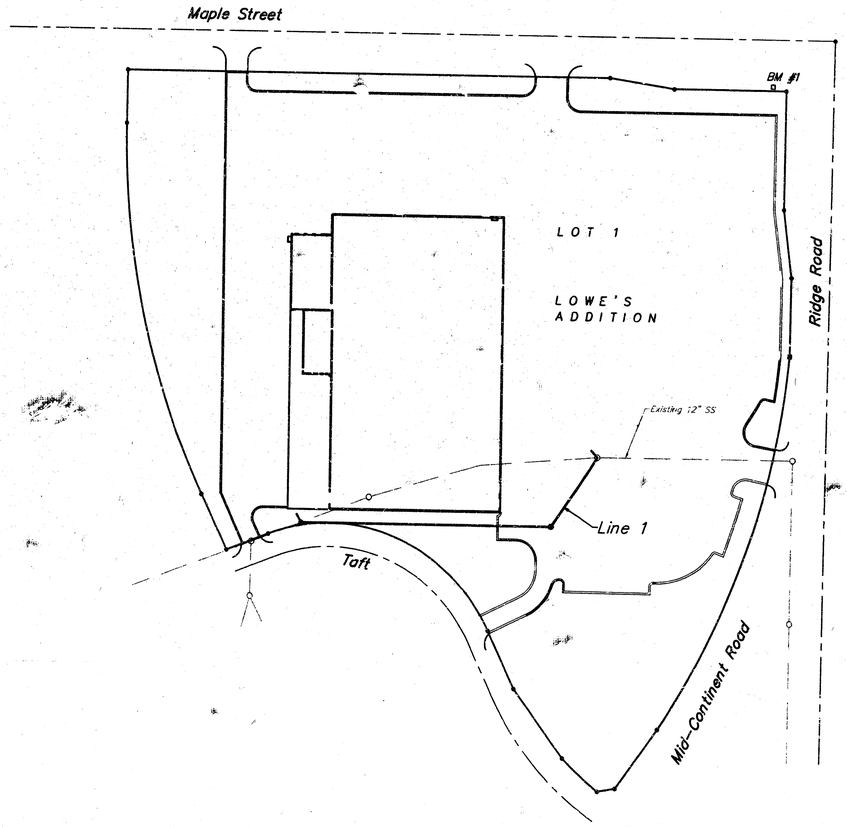

Scale: 1" = 100'

BENCHMARK:

BM #1 City of Wichita Benchmark Disk - S.W. Corner of Intersection, 69' South & 97' West of ℄ Ridge Road and Maple, 10.5' North of Face of Sidewalk.
Elev. = 142.07 City Datum

INDEX:

1 Title Sheet
2 Line 1
3 Standard Manhole Detail
4 Copy of Lowe's Addition Plat

APPROVED AS NOTED
BY CITY ENGINEER OF WICHITA
Sanitary Sewers VRH 9/16/97

NOTE TO CONTRACTORS

Inspection and testing for this project is to be provided by a Licensed Consulting Engineering Firm under contract with the Owner/Developer. Said inspection to be in accordance with the City of Wichita standard construction engineering practices and certified by a Licensed Professional Engineer. No work shall be performed in dedicated easements or public right-of-way by the Contractor without such inspection nor shall any work be commenced without written authorization by the City Engineer. All Construction and Materials shall comply with the City of Wichita Specifications and Standards (on file and available in the City Engineer's Office).

Booked
11/18/97
N-278
ROL

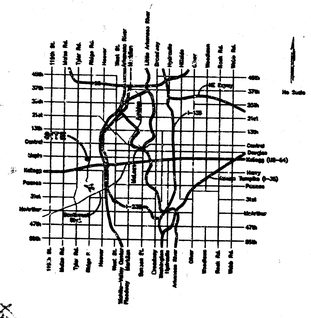

GRANT W. DIEN
No. 11,147
STATE OF KANSAS
PROFESSIONAL ENGINEER

AS-BUILT: 10/21/97 SEPTEMBER, 1997 LOWE1SSOOV

BAUGHMAN COMPANY P.A.
ENGINEERING, SURVEYING, & PLANNING
316-262-7271 • 315 FLLIS • WICHITA, KANSAS 67211

BENCHMARK:
City of Wichita Benchmark Disk –
S.W. Corner of intersection, 69'
South & 97' West of ℄ Ridge
Road and Maple, 10.5' North of
Face of Sidewalk.
Elev. = 142.07 City Datum

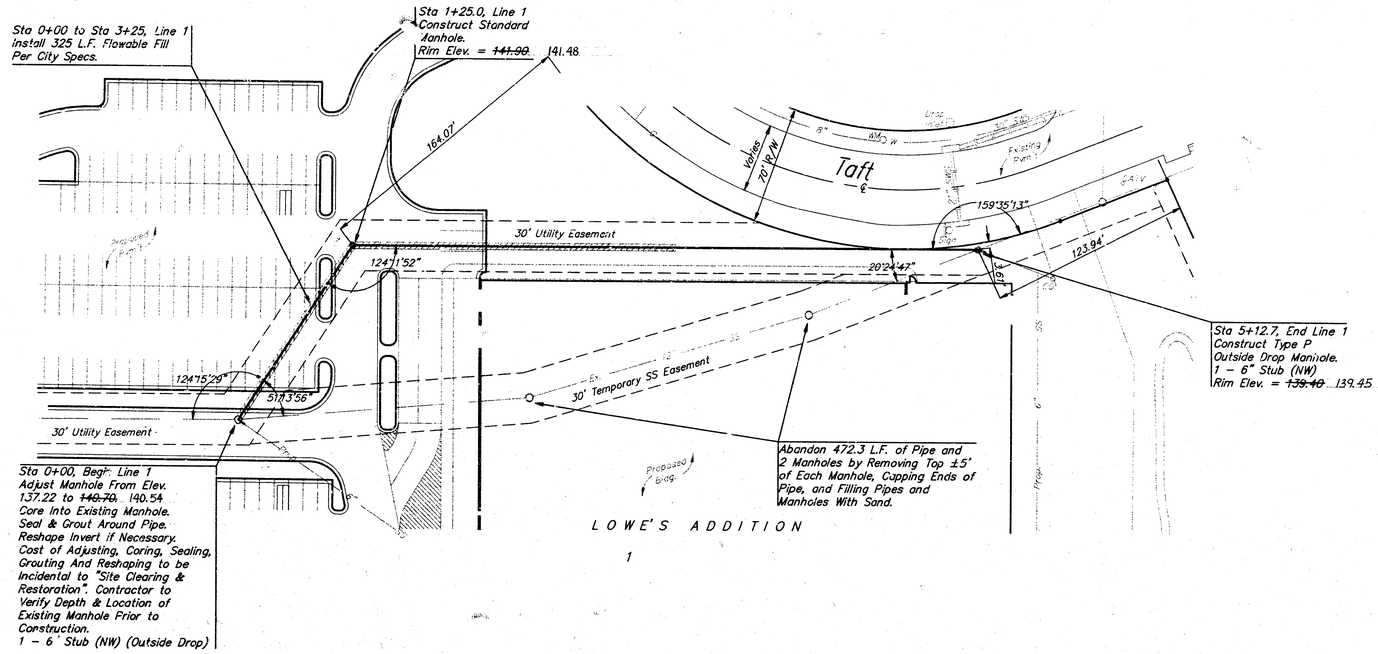

Scale: 1" = 40' Horizontal
1" = 5' Vertical
• = Iron

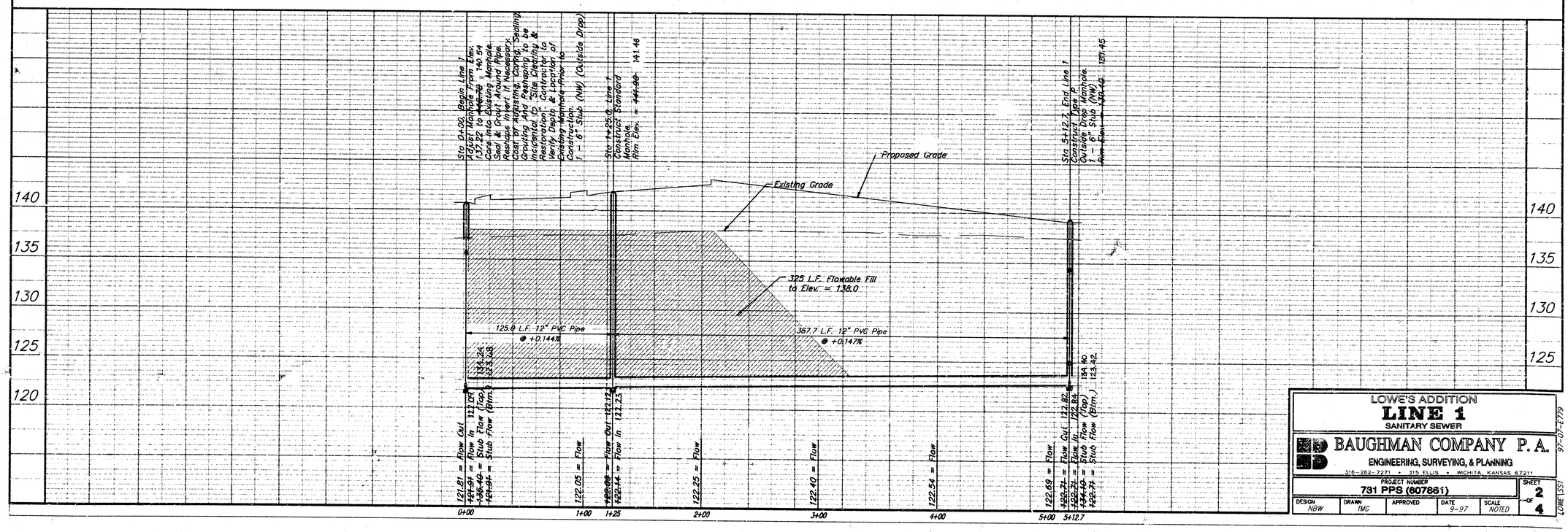

LOWE'S ADDITION
LINE 1
SANITARY SEWER

BAUGHMAN COMPANY P.A.
ENGINEERING, SURVEYING, & PLANNING
316-262-7271 • 315 ELLIS • WICHITA, KANSAS 67211

PROJECT NUMBER 731 PPS (607681)

DESIGN	DRAWN	APPROVED	DATE	SCALE	SHEET
NBW	TMC		9-97	NOTED	2 OF 4

97-07-2779
LOWE'SST

SEWER APPURTENANCES DETAILS

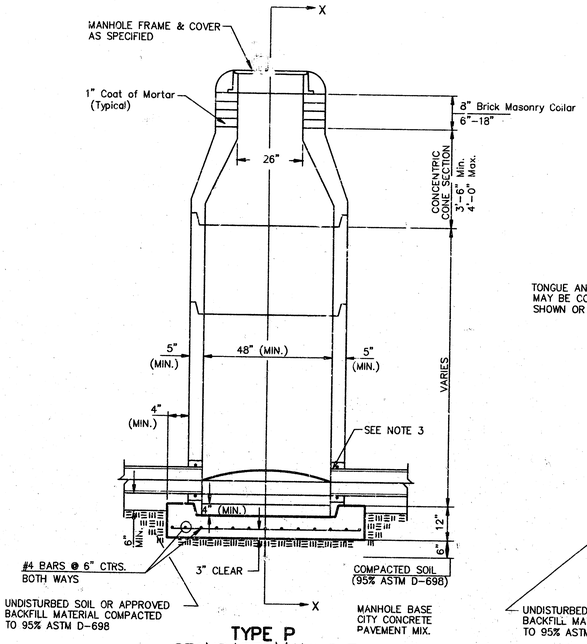

TYPE P STANDARD MANHOLE

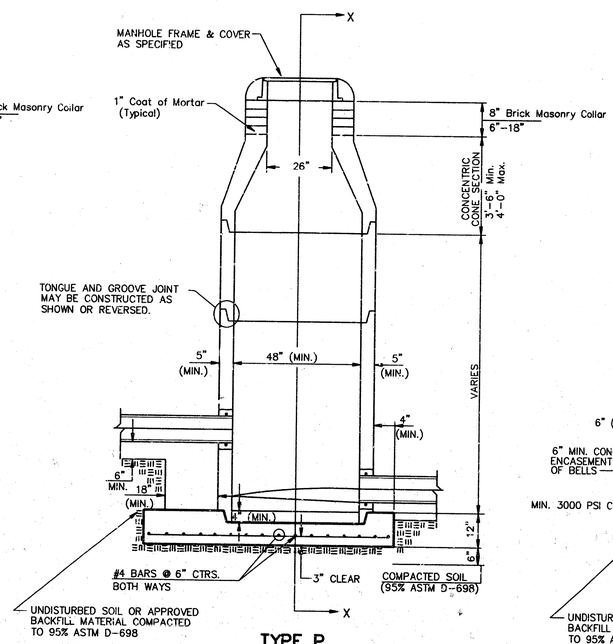

TYPE P INSIDE DROP MANHOLE

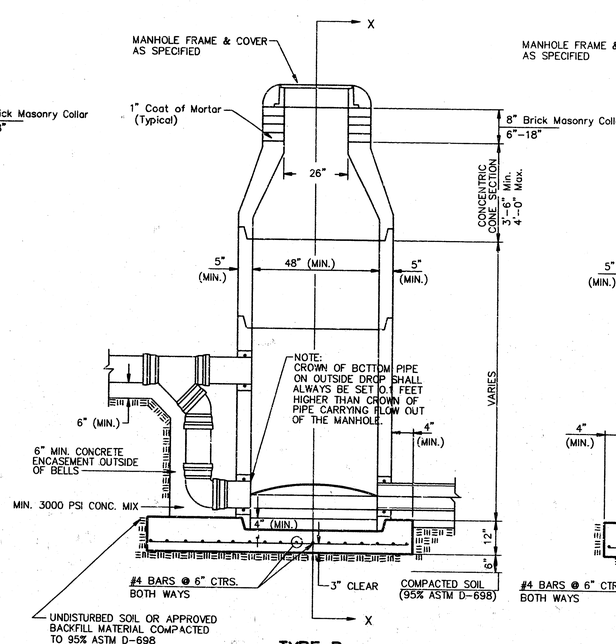

TYPE P OUTSIDE DROP MANHOLE

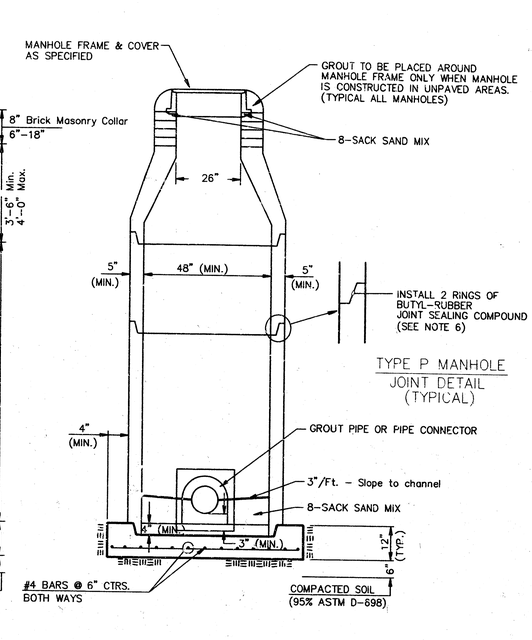

SECTION X (TYPICAL)

GENERAL NOTES

PRECAST MANHOLE NOTES

1. ALL PRECAST CONCRETE MANHOLE SECTIONS SHALL CONFORM TO THE LATEST REVISIONS OF A.S.T.M. C478 AS MODIFIED BY THE SPECIFICATIONS.
2. NON-SHRINK GROUT SHALL BE NON-METALLIC TYPE.
3. APPROVED FLEXIBLE WATERSTOP GASKETS SHALL BE INSTALLED TO JOIN THE SEWER TO THE MANHOLE WALL WHEN A.B.S. COMPOSITE PIPE OR P.V.C. PIPE IS USED. FOR OTHER TYPES OF PIPE THE SEWER SHALL BE GROUTED IN PLACE WITH NON-SHRINK GROUT. THE SEWER PIPE SHALL BE SUPPORTED WITH CONCRETE ENCASEMENT A MINIMUM OF 3 FEET FROM THE MANHOLE WALL AND TO THE FIRST JOINT FOR V.C.P. SUCH THAT THE JOINT REMAINS FLEXIBLE.
4. ALL INSIDE SURFACES OF THE CONCRETE MANHOLE WHICH WOULD BE EXPOSED TO SEWER GAS SHALL BE COATED WITH 2 COATS TNEMEC SERIES 66 HI-BUILD EPOXOLINE, DRY THICKNESS OF 8 MILS (MIN.)
5. EXTERIOR MANHOLE WALLS SHALL BE COATED WITH 1 COAT MOBILARMA 633 BITUMINOUS COATING.
6. JOINT SEALING COMPOUND SHALL BE KENT SEAL NO. 2 OR APPROVED EQUAL.
7. PRECAST MANHOLES SHALL BE SET AT LEAST 4 INCHES INTO THE MANHOLE BASE.
8. TOP OF MANHOLE FLOOR SLAB SHALL BE AT LEAST 3 INCHES BELOW THE FLOW LINE OF THE OUTLET PIPE TO INSURE SUFFICIENT MINIMUM THICKNESS OF SHAPED INVERT.
9. LIFTING HOLES SHALL BE FILLED WITH NON-SHRINK GROUT AND THE INTERIOR SURFACE COATED AS SPECIFIED.
10. MORTAR USED IN MASONRY CONSTRUCTION SHALL CONTAIN 8 SACKS OF CEMENT PER CUBIC YARD. CONCRETE USED IN MANHOLE BASES SHALL CONFORM TO THE REQUIREMENTS OF CONCRETE FOR CONCRETE PAVEMENT CONSTRUCTION AS SPECIFIED IN THE CITY STANDARD PAVING SPECIFICATIONS USING CITY CONCRETE PAVEMENT MIX WITHOUT AIR ENTRAINING ADMIXTURE. MORTAR SHALL BE PLACED AROUND THE MANHOLE RING AS SHOWN ON THE DRAWINGS WHEN MANHOLES ARE CONSTRUCTED IN UNPAVED AREAS. MANHOLES CONSTRUCTED WHERE PIPE SIZES ARE SMALLER THAN 24" SHALL HAVE AN INSIDE DIAMETER OF 4'. MANHOLES CONSTRUCTED WHERE PIPE SIZES ARE 24" OR LARGER SHALL HAVE AN INSIDE DIAMETER OF 5'. COMPLETED MANHOLE SHALL BE WITHOUT LEAKS AND WATER TIGHT.
11. REINFORCING STEEL SHALL BE INSTALLED IN THE MANHOLE BASES AND SHALL CONSIST OF NO. 4 BARS PLACED ON 6" CENTERS IN BOTH DIRECTIONS. THE MANHOLE BASE REINFORCEMENT SHALL BE PLACED AT LEAST 3" ABOVE THE BOTTOM OF THE MANHOLE BASE. ALL COSTS FOR FURNISHING AND INSTALLING REINFORCING STEEL SHALL BE INCLUDED IN THE UNIT PRICE BID FOR THE MANHOLE.
12. OPENINGS SHALL BE CUT INTO THE MANHOLE WALL WHEN OUTSIDE DROPS ARE CONSTRUCTED ON EXISTING MANHOLES. SUCH OPENINGS CUT INTO EXISTING MANHOLES SHALL BE AS SMALL AS PRACTICAL TO FACILITATE INSTALLING AND GROUTING THE NEW PIPE IN PLACE. WATERSTOP GASKETS SHALL BE USED WITH P.V.C. AND A.B.S. COMPOSITE PIPE. THE NEW PIPE SHALL BE GROUTED INTO THE OPENING USING AN APPROVED NONSHRINK GROUT FOR THE FULL MANHOLE WALL THICKNESS. THE EXTERIOR OF THE COMPLETED CONNECTION SHALL BE SEALED WITH AN APPROVED BITUMINOUS COATING SUCH THAT THE CONNECTION WILL BE WATER TIGHT. FLOOR OF MANHOLE SHALL BE MODIFIED TO FORM NEW FLOW CHANNEL FOR THE NEW CONNECTION AS INDICATED BY THE DRAWING. THIS WORK, INCLUDING MODIFICATION OF MANHOLE FLOOR, SHALL BE PAID FOR AT THE UNIT PRICE BID FOR OUTSIDE DROP STACK CONSTRUCTED ON EXISTING MANHOLE.
13. THE FLOORS OF ALL MANHOLES SHALL BE SHAPED WITH FLOW CHANNELS SUCH THAT THE MANHOLES WILL BE SELF CLEANING AND FREE OF AREAS WHERE SOLIDS COULD BE DEPOSITED AS SEWAGE FLOWS THROUGH THE MANHOLE FROM ALL INLET PIPES TO THE OUTLET PIPE. FLOW CHANNELS SHALL BE FORMED TO MATCH THE BOTTOM HALVES OF THE INFLOWING PIPES AND THE OUTFLOWING PIPE AS SHOWN BY THE DRAWINGS EXCEPT FOR INSIDE DROP MANHOLES. FLOW CHANNELS FOR INSIDE DROP MANHOLES SHALL BE CONSTRUCTED AS INDICATED BY THE DRAWING. MANHOLE FLOORS SHALL HAVE SLOPES OF 3 INCHES PER FOOT IN THE AREAS OUTSIDE OF THE FLOW CHANNELS SLOPED TOWARD THE FLOW CHANNELS. PIPES LAID THROUGH MANHOLES SHALL HAVE THE TOP HALF REMOVED TO NEAT LINES FOR THE FULL INSIDE DIAMETER OF THE MANHOLE. MANHOLE FLOORS SHALL THEN BE SHAPED AROUND THE BOTTOM HALF OF THE PIPE WHICH FORMS THE FLOW CHANNEL.
14. PIPES INSTALLED WITHIN THE EXCAVATION MADE FOR THE MANHOLE SHALL BE CRADLED WITH CONCRETE TO THE LIMITS OF THE MANHOLE EXCAVATION. WHEN CLAY PIPE IS USED, THE CRADLE SHALL EXTEND TO THE FIRST JOINT OUTSIDE THE MANHOLE. THE CRADLE SHALL BE TERMINATED AT THE CLAY PIPE JOINT IN A MANNER WHICH WILL MAINTAIN THE FLEXIBILITY OF THE JOINT. COST OF CRADLE WITHIN MANHOLE EXCAVATION OR TO CLAY PIPE JOINTS ADJACENT TO MANHOLE SHALL BE INCLUDED IN THE UNIT PRICE BID FOR THE MANHOLE.
15. MANHOLE COVER CASTINGS AND MANHOLE FRAME CASTINGS SHALL CONFORM TO THE REQUIREMENTS AS INDICATED IN THE STANDARD SPECIFICATIONS AND AS SHOWN IN THE STANDARD DETAIL DRAWING.
16. THE VERTICAL DROP IN INSIDE DROP MANHOLES SHALL NOT EXCEED 2' FOR INFLOWING PIPES SIZED 12" OR SMALLER AND 2' FOR INFLOWING PIPES LARGER THAN 12". THE CROWNS OF INFLOWING PIPES SHALL NEVER BE SET LOWER THAN THE CROWN OF THE OUTFLOWING PIPE.
17. STANDARD MANHOLES AND STANDARD INSIDE DROP MANHOLES SHALL BE BID AS STANDARD MANHOLES FOR THE TYPE AND DIAMETER INDICATED. OUTSIDE DROP MANHOLES SHALL BE BID AS STANDARD OUTSIDE DROP MANHOLES FOR THE TYPE AND DIAMETER INDICATED. ALL MANHOLE DIAMETERS WILL BE 4' UNLESS INDICATED OTHERWISE.
18. A BRICK MASONRY COLLAR SHALL BE INSTALLED BETWEEN THE CAST IRON FRAME AND THE CONCENTRIC CONE. THE COLLAR WILL HAVE 8" WALLS AND A VERTICAL HEIGHT OF 6" MINIMUM AND 18" MAXIMUM. A 1" COAT OF MORTAR WILL BE PLASTERED ON THE OUTSIDE OF THE COLLAR. THE USE OF PRE-CAST CONCRETE SPACERS FOR MANHOLE TOP ADJUSTMENT IS ALSO ALLOWED.

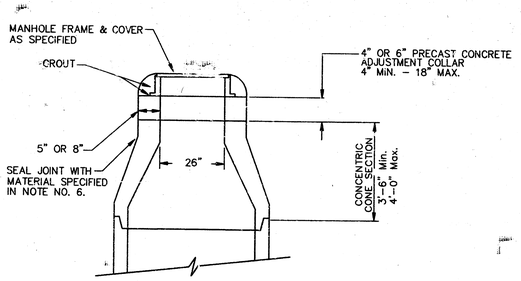

ALTERNATE CONSTRUCTION IN UNPAVED AREAS

CITY OF WICHITA

STD. MANHOLE DETAILS

& SEWER APPURTENANCES DETAIL

BAUGHMAN COMPANY P.A.

ENGINEERING, SURVEYING, & PLANNING

316-262-7271 • 315 ELLIS • WICHITA, KANSAS 67211

PROJECT NUMBER	SHEET
731 PPS (607861)	3 OF 4

DESIGN	DRAWN	APPROVED	DATE	SCALE
C.O.W.	Staff		9-97	NONE

97-07-E779

LDWG\PMH

LOWE'S ADDITION
WICHITA, SEDGWICK COUNTY, KANSAS

State of Kansas) SS
Sedgwick County)

We, Baughman Company, P.A. Surveyors in aforesaid County and State do hereby certify that we have surveyed and plotted "LOWE'S ADDITION", Wichita, Sedgwick County, Kansas and that the accompanying plat is a true and correct exhibit of the property surveyed, described as follows:

Lot 1, Ridge Plaza 7th Addition TOGETHER with a tract in the Northeast Quarter of Section 28, Township 27 South, Range 1 West of the Sixth Principal Meridian, Sedgwick County, Kansas described as Beginning at a point on the North line of said Northeast Quarter, 1097 feet West of the Northeast corner of said Northeast Quarter; thence Southerly along the East line of the Drainage Dedication recorded on film 88, page 994 and parallel with the East line of said Northeast Quarter, 138.61 feet to the point of curvature of a curve to the left having a radius of 1228.04 feet and a central angle of 26 degrees, 19 minutes, 15 seconds; thence Southeasterly along said curve 564.14 feet to the point of tangency of said curve; thence Southeasterly, tangent to said curve, 123.33 feet; thence Easterly, with a deflection angle to the left of 84 degrees, 42 minutes, 67.45 feet to the point of curvature of a curve to the right having a radius of 240 feet and a central angle of 84 degrees, 42 minutes; thence Southeasterly, along said curve 354.79 feet to the point of tangency of said curve; thence Southeasterly, tangent to said curve, 94.31 feet to the point of curvature of a curve to the left having a radius of 447.88 feet and a central angle of 30 degrees, 29 minutes, 30 seconds; thence Southeasterly, along said curve, 238.35 feet to the West line of Ridge Road as dedicated on film 165, page 1248; thence Northeasterly, along said West line of said Ridge Road, with a deflection angle to the left from the tangent of said curve of 87 degrees, 40 minutes, 11 seconds, 168.81 feet; thence continuing along said West line of said Ridge Road on a curve to the left having a radius of 1218.24 feet and a central angle of 20 degrees, 36 minutes, 04 seconds, 438.03 feet to the Southeast corner of said Ridge Plaza 7th Addition; thence Westerly, along said South line of said Ridge Plaza 7th Addition to the Southwest corner of said Ridge Plaza 7th Addition; thence Northerly, along the West line of said Ridge Plaza 7th Addition to a point on the North line of said Northeast Quarter, 619.83 feet West of the Northeast corner of said Northeast Quarter; thence West along said North line, 477.17 feet to the point of beginning.

Existing public easements and dedications being vacated by virtue of K.S.A. 12-512(b).

Baughman Company, P.A.

Gregory F. Severns — 7-22-97 — Surveyor

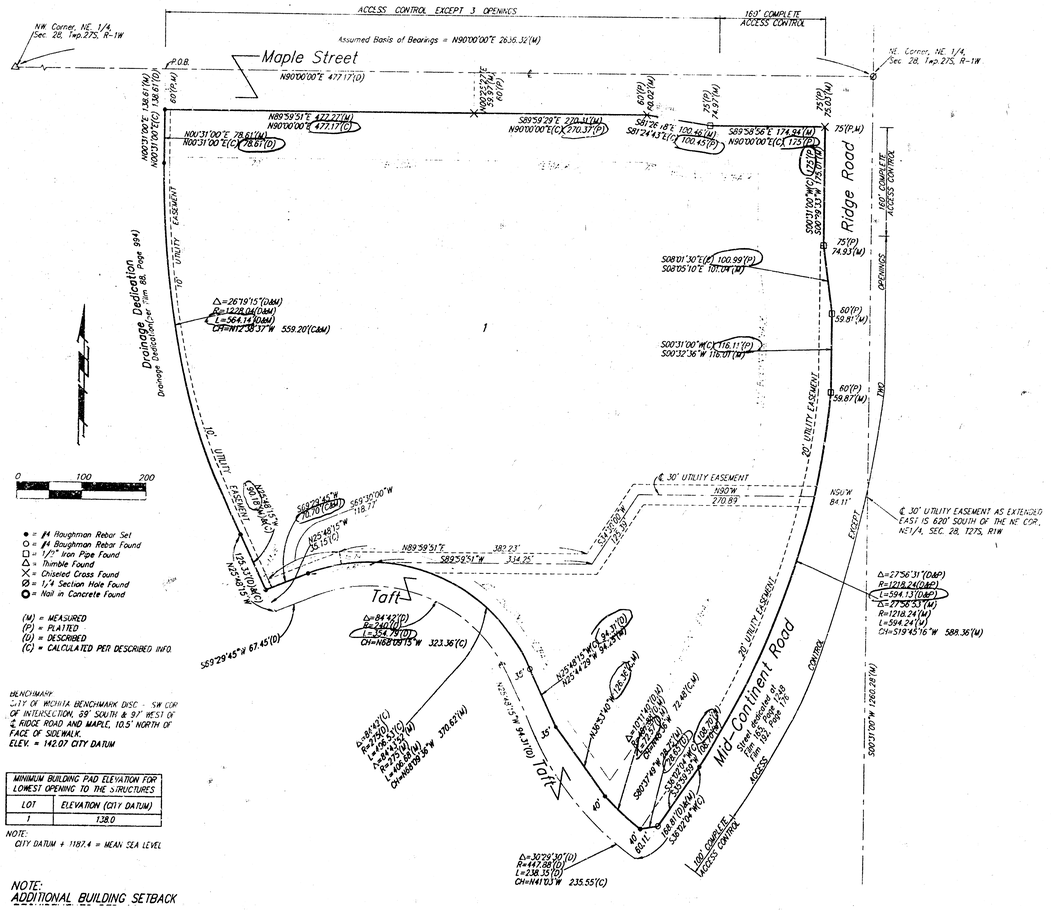

● = #4 Baughman Rebar Set
○ = #4 Baughman Rebar Found
□ = 1/2" Iron Pipe Found
△ = Thimble Found
× = Chiseled Cross Found
⊘ = 1/4 Section Hole Found
O = Nail in Concrete Found

(M) = MEASURED
(P) = PLATTED
(D) = DESCRIBED
(C) = CALCULATED PER DESCRIBED INFO.

BENCHMARK
CITY OF WICHITA BENCHMARK DISC. - SW COR OF INTERSECTION, 68' SOUTH & 9.7' WEST OF 2 RIDGE ROAD AND MAPLE, 10.5' NORTH OF FACE OF SIDEWALK.
ELEV. = 142.07 CITY DATUM

MINIMUM BUILDING PAD ELEVATION FOR LOWEST OPENING TO THE STRUCTURES	
LOT	ELEVATION (CITY DATUM)
1	138.0

NOTE:
CITY DATUM + 1187.4 = MEAN SEA LEVEL

NOTE:
ADDITIONAL BUILDING SETBACK

Know all men by these presents that we, the undersigned, have caused the land in the surveyors certificate to be plotted into a Lot and Streets to be known as "LOWE'S ADDITION", Wichita, Sedgwick County, Kansas. The utility easements are hereby granted as indicated for the construction and maintenance of all public utilities. The streets are hereby dedicated to and for the use of the public. All abutters rights of access to or from Maple Street, Ridge Road, Mid-Continent Road, and Taft shall be as indicated on the face of the plat. The Minimum Building Pad Elevation for the lowest opening to the structures shall be as shown on the face of the plat.

The Trustees under the Will and of the Estate of James Campbell, deceased

C.D. Pratt, Jr., Trustee

P. R. Cassiday, Trustee

C.R. Churchill, Trustee

D.A. Heenan, Trustee

State of Hawaii) SS
City and County of Honolulu)

Be it remembered, that on this 25th day of July, 1997, before me, the undersigned, a Notary Public, in and for the County and State aforesaid, came C.D. Pratt, Jr., Trustee under the Will and of The Estate of James Campbell, deceased, who is personally known to me to be the same person who executed the within instrument of writing and such person duly acknowledged the execution of the same.

In testimony whereof, I have hereunto set my hand and affixed my official seal the day and year above written.

My App't. Exp. Feb. 11, 2000 — Lydia L. Hannemann Notary Public
LYDIA L. HANNEMANN

State of Hawaii) SS
City and County of Honolulu)

Be it remembered, that on this 25th day of July, 1997, before me, the undersigned, a Notary Public, in and for the County and State aforesaid, came P.R. Cassiday, Trustee under the Will and of The Estate of James Campbell, deceased, who is personally known to me to be the same person who executed the within instrument of writing and such person duly acknowledged the execution of the same.

In testimony whereof, I have hereunto set my hand and affixed my official seal the day and year above written.

My App't. Exp. Feb. 11, 2000 — Lydia L. Hannemann Notary Public
LYDIA L. HANNEMANN

State of Hawaii) SS
City and County of Honolulu)

Be it remembered, that on this 25th day of July, 1997, before me, the undersigned, a Notary Public, in and for the County and State aforesaid, came C.R. Churchill, Trustee under the Will and of The Estate of James Campbell, deceased, who is personally known to me to be the same person who executed the within instrument of writing and such person duly acknowledged the execution of the same.

In testimony whereof, I have hereunto set my hand and affixed my official seal the day and year above written.

Lydia L. Hannemann Notary Public
LYDIA L. HANNEMANN

This plat of "LOWE'S ADDITION", Wichita, Sedgwick County, Kansas has been submitted to and approved by the Wichita-Sedgwick County Metropolitan Area Planning Commission, Wichita, Kansas.

Dated this ____ day of _____, 1997.

Wichita-Sedgwick County Metropolitan Area Planning Commission

_____, Chairman
John C. Frye

_____, Secretary
Marvin S. Krout

This plat approved and all dedications shown hereon accepted by the City Council of the City of Wichita, Kansas, this ____ day of _____, 1997.

_____, Mayor
Bob Knight

_____, City Clerk
Pat Burnett

Entered on transfer record this _____ day of _____, 1997.

_____, County Clerk
James Alford

State of Kansas) SS
Sedgwick County)

This is to certify that this plat has been filed for record in the office of the Register of Deeds, this ___ day of _____, 1997, at ___ o'clock ___M; and is duly recorded.

_____, Register of Deeds
Larry Consolver

_____, Deputy
Michael D. Hurtt

State of Hawaii) SS
City and County of Honolulu)

Be it remembered, that on this 25th day of July, 1997, before me, the undersigned, a Notary Public, in and for the County and State aforesaid, came D.A. Heenan, Trustee under the Will and of The Estate of James Campbell, deceased, who is personally known to me to be the same person who executed the within instrument of writing and such person duly acknowledged the execution of the same.

In testimony whereof, I have hereunto set my hand and affixed my official seal the day and year above written.

My App't. Exp. Feb. 11, 2000 — Lydia L. Hannemann Notary Public
LYDIA L. HANNEMANN

4/4

ST SO AO OT