PRIVATE SANITARY SEWER PLANS

MARRIOTT COURTYARD

LOT 23, BLOCK 1, FOX POINTE ADDITION

PROJECT NO. 863PPS

CITY OF WICHITA, KANSAS

MICHAEL E. LINDEBAK, CITY ENGINEER

INDEX CODE: 607861

GENERAL NOTES

1. THE CONTRACTOR SHALL BE RESPONSIBLE FOR PRESERVING PROPERTY IRONS. THE CONTRACTOR WILL BE REQUIRED TO RE-ESTABLISH ANY PROPERTY IRONS WHICH ARE DAMAGED OR DESTROYED BY HIS CONSTRUCTION OPERATIONS. SUCH IRONS SHALL BE RE-ESTABLISHED BY A LICENSED LAND SURVEYOR IN ACCORDANCE WITH STATE LAWS.

2. EXISTING UTILITIES AND THEIR LOCATIONS, AS SHOWN ON THE PLANS REPRESENT THE BEST INFORMATION OBTAINABLE FOR DESIGN. LOCATION INFORMATION HAS BEEN OBTAINED FROM THE VARIOUS UTILITY COMPANIES AND IS EITHER FROM COMPANY RECORD DRAWINGS OR COMPANY PROVIDED FIELD LOCATIONS. THE PLAN LOCATIONS SHOWN ARE NOT GUARANTEED. ADDITIONAL EXISTING UTILITIES MAY ALSO BE ENCOUNTERED.

3. CONTRACTOR WILL BE REQUIRED TO PROVIDE A MINIMUM ADVANCE NOTICE OF FORTY-EIGHT (48) HOURS TO UTILITY COMPANIES PRIOR TO STARTING ANY EXCAVATION AS FOLLOWS:

KANSAS ONE-CALL 1-800-344-7233
or 687-2470 (LOCAL WICHITA)

THE CONTRACTOR MUST NOTIFY THE FOLLOWING IN CASE OF AN EMERGENCY:

SOUTHWESTERN BELL TELEPHONE COMPANY	1-800-734-7590
CABLEVISION	263-2061
KG&E (GAS & ELECTRIC)	383-8600
CITY OF WICHITA WATER & SEWER MAINTENANCE	268-4608
WILLIAMS NATURAL GAS	524-0491
OR 1-800-324-9696 (AFTER 4 p.m.)	

4. RUBBLE FROM THE REMOVAL OF MISCELLANEOUS STRUCTURES AND EXCESS EXCAVATION WHICH IS TO BE WASTED SHALL BE DISPOSED OF ON SITES TO BE PROVIDED BY THE CONTRACTOR. THESE SITES SHALL BE APPROVED BY THE ENGINEER AS TO SUITABILITY, APPEARANCE AND SITE LOCATION. LOCATIONS THAT, IN THE OPINION OF THE ENGINEER, WILL LEAVE AN UNSIGHTLY APPEARANCE WILL NOT BE APPROVED. ALL DISPOSAL SITES MUST BE APPROVED BY THE KANSAS DEPARTMENT OF HEALTH AND ENVIRONMENT. MATERIAL EITHER STOCKPILED OR DISPOSED OF IN A FLOOD PLAIN WOULD REQUIRE A KANSAS STATE BOARD OF AGRICULTURE PERMIT. ANY MATERIAL DUMPED IN WATERS OF THE UNITED STATES OR WETLANDS IS SUBJECT TO U.S. CORPS OF ENGINEERS PERMITTING REGULATIONS. ANY MATERIAL BURIED OR STOCKPILED BEYOND APPROVED CONSTRUCTION LIMITS WOULD REQUIRE ADDITIONAL ARCHAEOLOGICAL INVESTIGATIONS UNLESS BURIED IN A PREVIOUSLY APPROVED BORROW LOCATION.

5. COST OF EXCAVATION, HAULING, AND DUMPING OF EXCESS EXCAVATION SHALL BE SUBSIDIARY TO THE PROJECT.

6. A PORTION OF EXCESS EXCAVATED MATERIAL SHALL BE MOUNDED AROUND MANHOLES WHICH EXTEND MORE THAN ONE (1) FOOT ABOVE THE EXISTING GROUND. SUCH MOUNDS SHALL BE CONSTRUCTED WITH A SIX (6) FOOT DIAMETER FLAT TOP WITH 4 TO 1 SIDE SLOPES DOWN TO THE ORIGINAL GROUND. THE ELEVATION OF THE FLAT TOP OF THE MOUND SHALL BE 0.4 FOOT BELOW THE TOP OF THE MANHOLE.

7. ALL STUBS AND PLUGGED PIPES SHALL BE LOCATED WITH GREEN PLASTIC TAPE IN THE SAME MANNER AS RISERS.

8. PRIOR TO LAYING SEWER LINES USING EXISTING STUBS IN EXISTING MANHOLES, THE CONTRACTOR SHALL EXPOSE AND VERIFY THE ELEVATION, GRADE AND ALIGNMENT OF EXISTING STUBS AND NOTIFY THE ENGINEER OF ANY DEVIATION FROM THE PLAN. WHERE CONNECTION TO AN EXISTING MANHOLE THAT DOES NOT HAVE AN EXISTING STUB OR THE STUB IS UNUSABLE DUE TO ELEVATION GRADE OR ALIGNMENT, THE CONTRACTOR SHALL RESHAPE THE EXISTING MANHOLE INVERT TO PROVIDE SMOOTH FLOW. THE COST OF RESHAPING EXISTING MANHOLE INVERTS IS INCIDENTAL TO THE PROJECT.

9. TREES AND SHRUBS IN PUBLIC RIGHT-OF-WAY WHICH ARE IN DIRECT CONFLICT WITH PROPOSED NEW CONSTRUCTION SHALL BE REMOVED BY THE CONTRACTOR WITH THE ENGINEER'S APPROVAL. TREES AND SHRUBS WHICH ARE NOT IN DIRECT CONFLICT WITH PROPOSED NEW CONSTRUCTION SHALL BE SAVED AND PROTECTED FROM DAMAGE.

10. ALL DISTURBED AREAS TO BE SEEDED WITH RYE GRASS AT A RATE OF 200LBS./ ACRE WITHIN 10 DAYS OF CONSTRUCTION. CONTRACTOR TO PREPARE GROUND PER CITY SPEC.

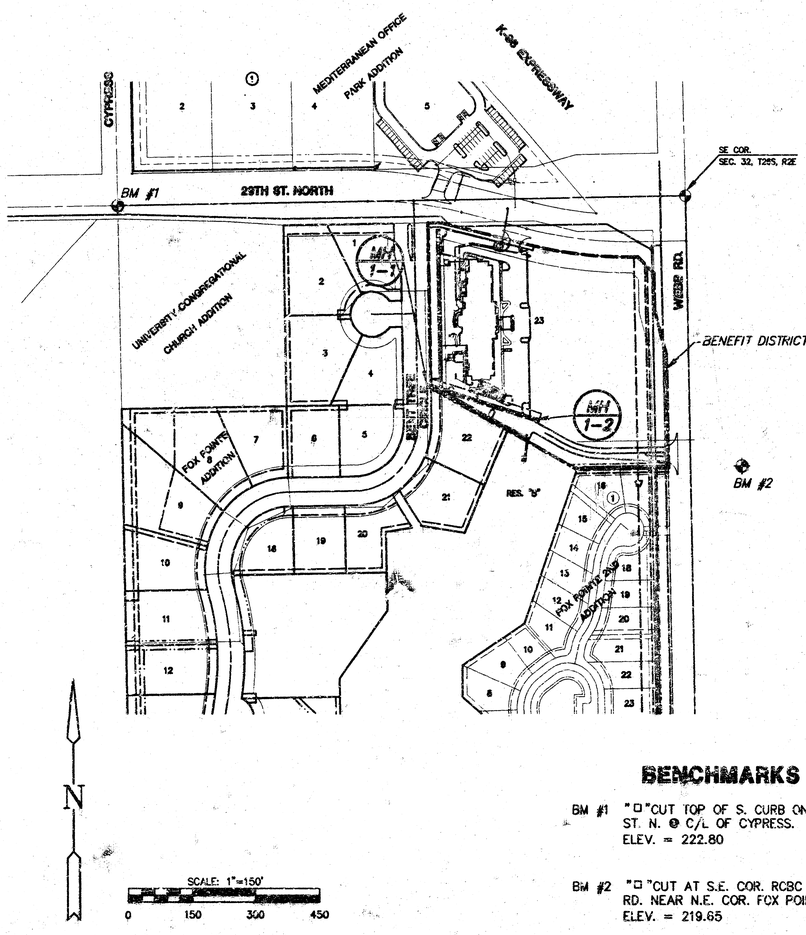

APPROVED AS NOTED
BY CITY ENGINEER OF WICHITA

SANITARY SEWERS VRH 12/16/98

STORM SEWERS_____

DRIVEWAY APPROACHED_____

WATER MAINS_____

PAVING_____

NOTE TO CONTRACTOR

INSPECTION AND TESTING FOR THIS PROJECT IS TO BE PROVIDED BY A LICENSED CONSULTING ENGINEERING FIRM UNDER CONTRACT WITH THE OWNER/DEVELOPER. SAID INSPECTION TO BE IN ACCORDANCE WITH THE CITY OF WICHITA STANDARD CONSTRUCTION ENGINEERING PRACTICES AND CERTIFIED BY A LICENSED PROFESSIONAL ENGINEER. NO WORK SHALL BE PERFORMED IN DEDICATED EASEMENTS OR THE PUBLIC RIGHT-OF-WAY BY THE CONTRACTOR WITHOUT SUCH INSPECTION, NOR SHALL ANY WORK BE COMMENCED IN DEDICATED EASEMENTS OR PUBLIC RIGHT-OF-WAY WITHOUT WRITTEN AUTHORIZATION BY THE CITY ENGINEER.

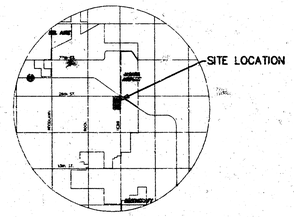

LOCATION MAP

INDEX TO DRAWINGS

SHEET NO.	DESCRIPTION
1	TITLE SHEET
2	MANHOLE DETAILS
3	LINE 1
4	FINAL PLAT

JEFFREY T. CARTWRIGHT LICENSED 14371 PROFESSIONAL ENGINEER
11-7-98

BENCHMARKS

BM #1 "□"CUT TOP OF S. CURB ON 29TH ST. N. @ C/L OF CYPRESS.
ELEV. = 222.80

BM #2 "□"CUT AT S.E. COR. RCBC UNDER WEBB RD. NEAR N.E. COR. FOX POINTE
ELEV. = 219.65

MID-KANSAS ENGINEERING CONSULTANTS, INC.
411 N. WEBB ROAD
WICHITA, KS. 67206
316-684-9600

MARRIOTT COURTYARD
PROJECT NAME

SANITARY SEWER PLANS
SHEET TITLE

JTC	DAC	JTC
DESIGN BY:	DRAWN BY:	CHECKED BY:
NOVEMBER 1998	98108_BT	1 / 4
DATE	JOB NO.	SHEET/OF

R:\CIVIL\PROJECTS\98108\SANITARY\98108_ST.DWG Mon Nov 09 08:52:25 1998

SEWER APPURTENANCES DETAILS

ADOPTED AS STANDARD DESIGN BY CITY OF WICHITA

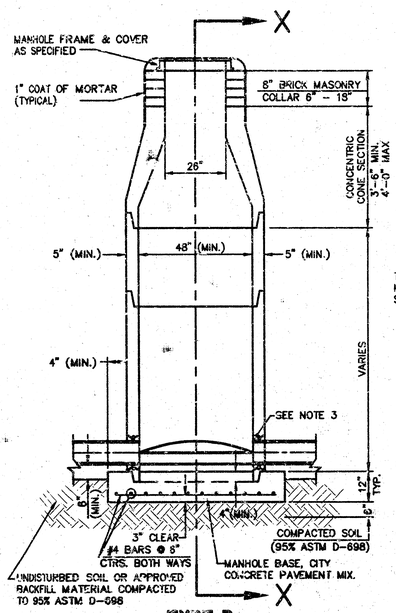

TYPE P STANDARD MANHOLE

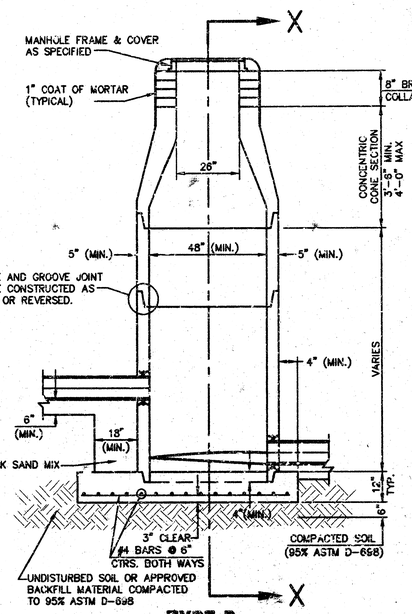

TYPE P INSIDE DROP MANHOLE

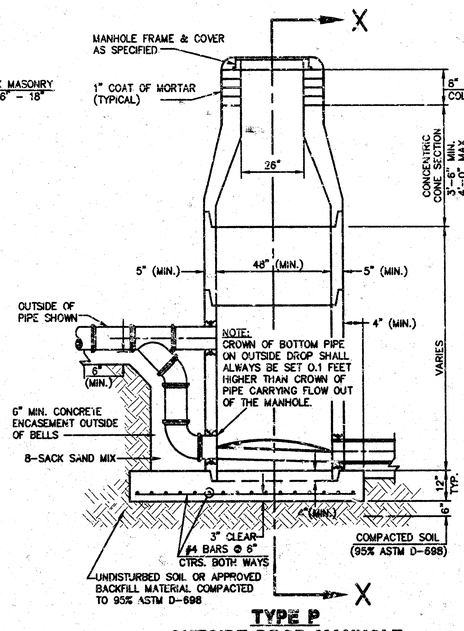

TYPE P OUTSIDE DROP MANHOLE

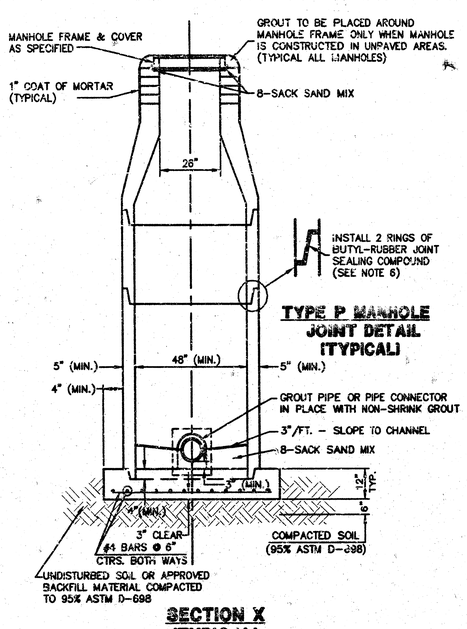

TYPE P MANHOLE JOINT DETAIL (TYPICAL)

SECTION X (TYPICAL)

GENERAL NOTES - PRECAST MANHOLE NOTES

1. ALL PRECAST CONCRETE MANHOLE SECTIONS SHALL CONFORM TO THE LATEST REVISIONS OF A.S.T.M. C478 AS MODIFIED BY THE SPECIFICATIONS.
2. NON-SHRINK GROUT SHALL BE NON-METALLIC TYPE.
3. APPROVED FLEXIBLE WATERSTOP GASKETS SHALL BE INSTALLED TO JOIN THE SEWER TO THE MANHOLE WALL WHEN A.B.S. COMPOSITE PIPE OR P.V.C. PIPE IS USED. FOR OTHER TYPES OF PIPE THE SEWER SHALL BE GROUTED IN PLACE WITH NON-SHRINK GROUT. THE SEWER PIPE SHALL BE SUPPORTED WITH CONCRETE ENCASEMENT A MINIMUM OF 3 FEET FROM THE MANHOLE WALL AND TO THE FIRST JOINT FOR V.C.P. SUCH THAT THE JOINT REMAINS FLEXIBLE.
4. ALL INSIDE SURFACES OF THE CONCRETE MANHOLE WHICH WOULD BE EXPOSED TO SEWER GAS SHALL BE COATED WITH 2 COATS TNEMEC SERIES 66 HI-BUILD EPOXOLINE, DRY THICKNESS OF 8 MILS (MIN.)
5. EXTERIOR MANHOLE WALLS SHALL BE COATED WITH 1 COAT MOBILARMA 633 BITUMINUS COATING.
6. JOINT SEALING COMPOUND SHALL BE KENT SEAL NO. 2 OR APPROVED EQUAL.
7. PRECAST MANHOLES SHALL BE SET AT LEAST 4 INCHES INTO THE MANHOLE BASE.
8. TOP OF MANHOLE FLOOR SLAB SHALL BE AT LEAST 3 INCHES BELOW THE FLOW LINE OF THE OUTLET PIPE TO INSURE SUFFICIENT MINIMUM THICKNESS OF SHAPED INVERT.
9. LIFTING HOLES SHALL BE FILLED WITH NON-SHRINK GROUT AND THE INTERIOR SURFACE COATED AS SPECIFIED.
10. MORTAR USED IN MASONRY CONSTRUCTION SHALL CONTAIN 8 SACKS OF CEMENT PER CUBIC YARD. CONCRETE USED IN MANHOLE BASES SHALL CONFORM TO THE REQUIREMENTS OF CONCRETE FOR CONCRETE PAVEMENT CONSTRUCTION AS SPECIFIED IN THE CITY STANDARD PAVING SPECIFICATIONS USING CITY CONCRETE PAVEMENT MIX WITHOUT AIR ENTRAINING ADMIXTURE. MORTAR SHALL BE PLACED AROUND THE MANHOLE RING AS SHOWN ON THE DRAWINGS WHEN MANHOLES ARE CONSTRUCTED IN UNPAVED AREAS. MANHOLES CONSTRUCTED WHERE PIPE SIZES ARE SMALLER THAN 24" SHALL HAVE AN INSIDE DIAMETER OF 4'. MANHOLES CONSTRUCTED WHERE PIPE SIZES ARE 24" OR LARGER SHALL HAVE AN INSIDE DIAMETER OF 5'. COMPLETED MANHOLE SHALL BE WITHOUT LEAKS AND WATER TIGHT.
11. REINFORCING STEEL SHALL BE INSTALLED IN THE MANHOLE BASES AND SHALL CONSIST OF NO. 4 BARS PLACED ON 6" CENTERS IN BOTH DIRECTIONS. THE MANHOLE BASE REINFORCEMENT SHALL BE PLACED AT LEAST 3" ABOVE THE BOTTOM OF THE MANHOLE BASE. ALL COSTS FOR FURNISHING AND INSTALLING REINFORCING STEEL SHALL BE INCLUDED IN THE UNIT PRICE BID FOR THE MANHOLE.
12. OPENINGS SHALL BE CUT INTO THE MANHOLE WALL WHEN OUTSIDE DROPS ARE CONSTRUCTED ON EXISTING MANHOLES. SUCH OPENINGS CUT INTO EXISTING MANHOLES SHALL BE AS SMALL AS PRACTICAL TO FACILITATE INSTALLING AND GROUTING THE NEW PIPE IN PLACE. WATERSTOP GASKETS SHALL BE USED WITH P.V.C. AND A.B.S. COMPOSITE PIPE. THE NEW PIPE SHALL BE GROUTED INTO THE OPENING USING AN APPROVED NONSHRINK GROUT FOR THE FULL MANHOLE WALL THICKNESS. THE EXTERIOR OF THE COMPLETED CONNECTION SHALL BE SEALED WITH AN APPROVED BITUMINOUS COATING SUCH THAT THE CONNECTION WILL BE WATER TIGHT. FLOOR OF MANHOLE SHALL BE MODIFIED TO FORM NEW FLOW CHANNEL FOR THE NEW CONNECTION AS INDICATED BY THE DRAWING. THIS WORK, INCLUDING MODIFICATION OF MANHOLE FLOOR, SHALL BE PAID FOR AT THE UNIT PRICE BID FOR OUTSIDE DROP STACK CONSTRUCTED ON EXISTING MANHOLE.
13. THE FLOORS OF ALL MANHOLES SHALL BE SHAPED WITH FLOW CHANNELS SUCH THAT THE MANHOLES WILL BE SELF CLEANING AND FREE OF AREAS WHERE SOLIDS COULD BE DEPOSITED AS SEWAGE FLOWS THROUGH THE MANHOLE FROM ALL INLET PIPES TO THE OUTLET PIPE. FLOW CHANNELS SHALL BE FORMED TO MATCH THE BOTTOM HALVES OF THE INFLOWING PIPES AND THE OUTFLOWING PIPE AS SHOWN BY THE DRAWINGS EXCEPT FOR INSIDE DROP MANHOLES. FLOW CHANNELS FOR INSIDE DROP MANHOLES SHALL BE CONSTRUCTED AS INDICATED BY THE DRAWING. MANHOLE FLOORS SHALL HAVE SLOPES OF 3 INCHES PER FOOT IN THE AREAS OUTSIDE OF THE FLOW CHANNELS SLOPED TOWARD THE FLOW CHANNELS. PIPES LAID THROUGH MANHOLES SHALL HAVE THE TOP HALF REMOVED TO NEAT LINES FOR THE FULL INSIDE DIAMETER OF THE MANHOLE. MANHOLE FLOORS SHALL THEN BE SHAPED AROUND THE BOTTOM HALF OF THE PIPE WHICH FORMS THE FLOW CHANNEL.
14. PIPES INSTALLED WITHIN THE EXCAVATION MADE FOR THE MANHOLE SHALL BE CRADLED WITH CONCRETE TO THE LIMITS OF THE MANHOLE EXCAVATION. WHEN CLAY PIPE IS USED, THE CRADLE SHALL EXTEND TO THE FIRST JOINT OUTSIDE THE MANHOLE. THE CRADLE SHALL BE TERMINATED AT THE CLAY PIPE JOINT IN A MANNER WHICH WILL MAINTAIN THE FLEXIBILITY OF THE JOINT. COST OF CRADLE WITHIN MANHOLE EXCAVATION OR TO CLAY PIPE JOINTS ADJACENT TO MANHOLE SHALL BE INCLUDED IN THE UNIT PRICE BID FOR THE MANHOLE.
15. MANHOLE COVER CASTINGS AND MANHOLE FRAME CASTINGS SHALL CONFORM TO THE REQUIREMENTS AS INDICATED IN THE STANDARD SPECIFICATIONS AND AS SHOWN IN THE STANDARD DETAIL DRAWING.
16. THE VERTICAL DROP IN INSIDE DROP MANHOLES SHALL NOT EXCEED 2' FOR INFLOWING PIPES. THE CROWNS OF INFLOWING PIPES SHALL NEVER BE SET LOWER THAN THE CROWN OF THE OUTFLOWING PIPE.
17. STANDARD MANHOLES AND STANDARD INSIDE DROP MANHOLES SHALL BE BID AS STANDARD MANHOLES FOR THE TYPE AND DIAMETER INDICATED. OUTSIDE DROP MANHOLES SHALL BE BID AS STANDARD OUTSIDE DROP MANHOLES FOR THE TYPE AND DIAMETER INDICATED. ALL MANHOLE DIAMETERS WILL BE 4' UNLESS INDICATED OTHERWISE.
18. A BRICK MASONRY COLLAR SHALL BE INSTALLED BETWEEN THE CAST IRON FRAME AND THE CONCENTRIC CONE. THE COLLAR WILL HAVE 6" WALLS AND A VERTICAL HEIGHT OF 6" MINIMUM AND 18" MAXIMUM. A 1" COAT OF MORTAR WILL BE PLASTERED ON THE OUTSIDE OF THE COLLAR.

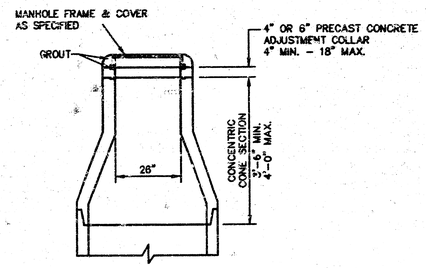

ALTERNATE CONSTRUCTION IN UNPAVED AREAS

REVISED: 6-12-86

MANHOLE DETAILS

CITY OF WICHITA, KANSAS 2 / 4

Design C.O.W.	Checked by	Checked by	
Drawn by	Date	Date JAN 1998	Job No. 98108_80

P:\CAD\LEPROJECT\98108\SHEETS\98108_SP1.DWG Mon Nov 09 09:56:47 1998

MARRIOTT COURTYARD SANITARY SEWER PLANS LINE 1

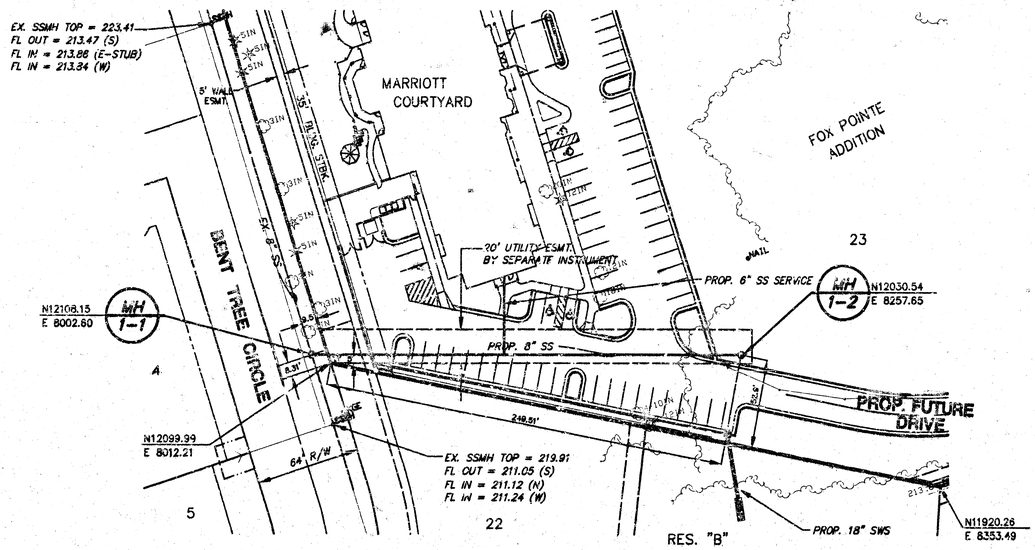

NOTE: CONTRACTOR TO VERIFY LOCATION & DEPTH OF EXIST. 8" SANITARY SEWER PRIOR TO CONST.

PLAN - LINE 1
SCALE: 1" = 40'

PROFILE - LINE 1
HORIZONTAL SCALE: 1" = 40'
VERTICAL SCALE: 1" = 5'

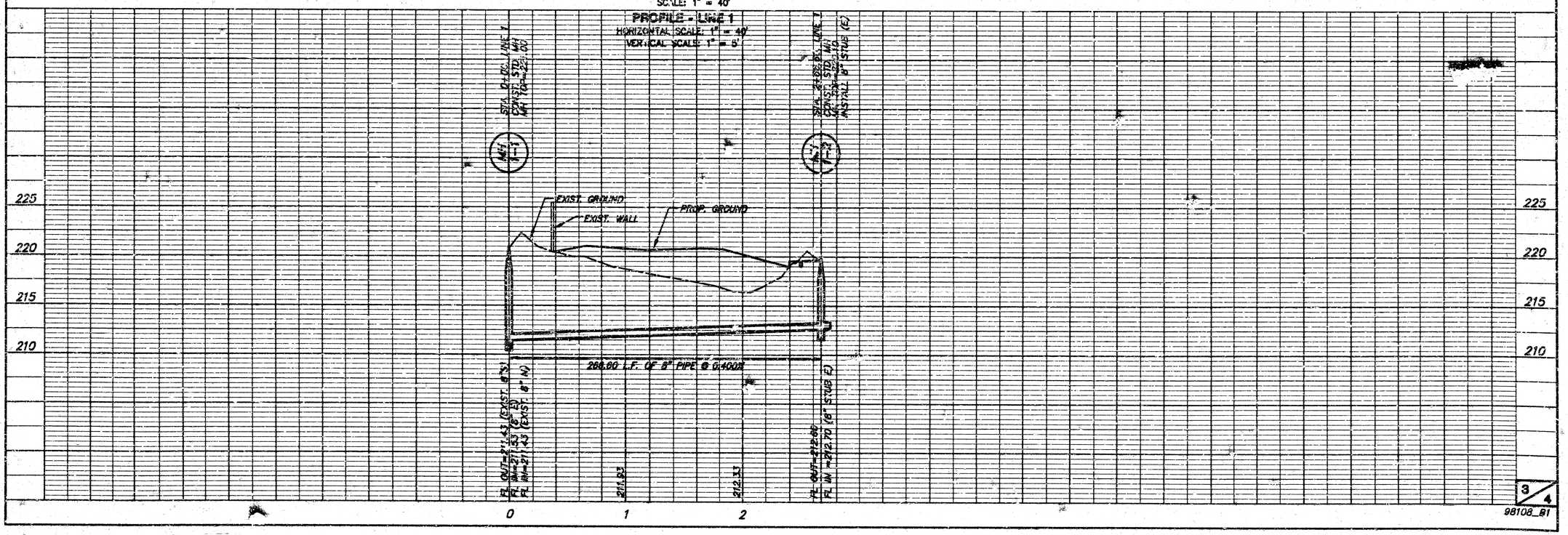

98108_B1

F:\CIVIL\PROJECTS\98108\SANSEW01_B1.DWG Nov 03 07:26 1998

E 7-30

FINAL PLAT OF

FOX POINTE

AN ADDITION TO WICHITA, SEDGWICK COUNTY, KANSAS

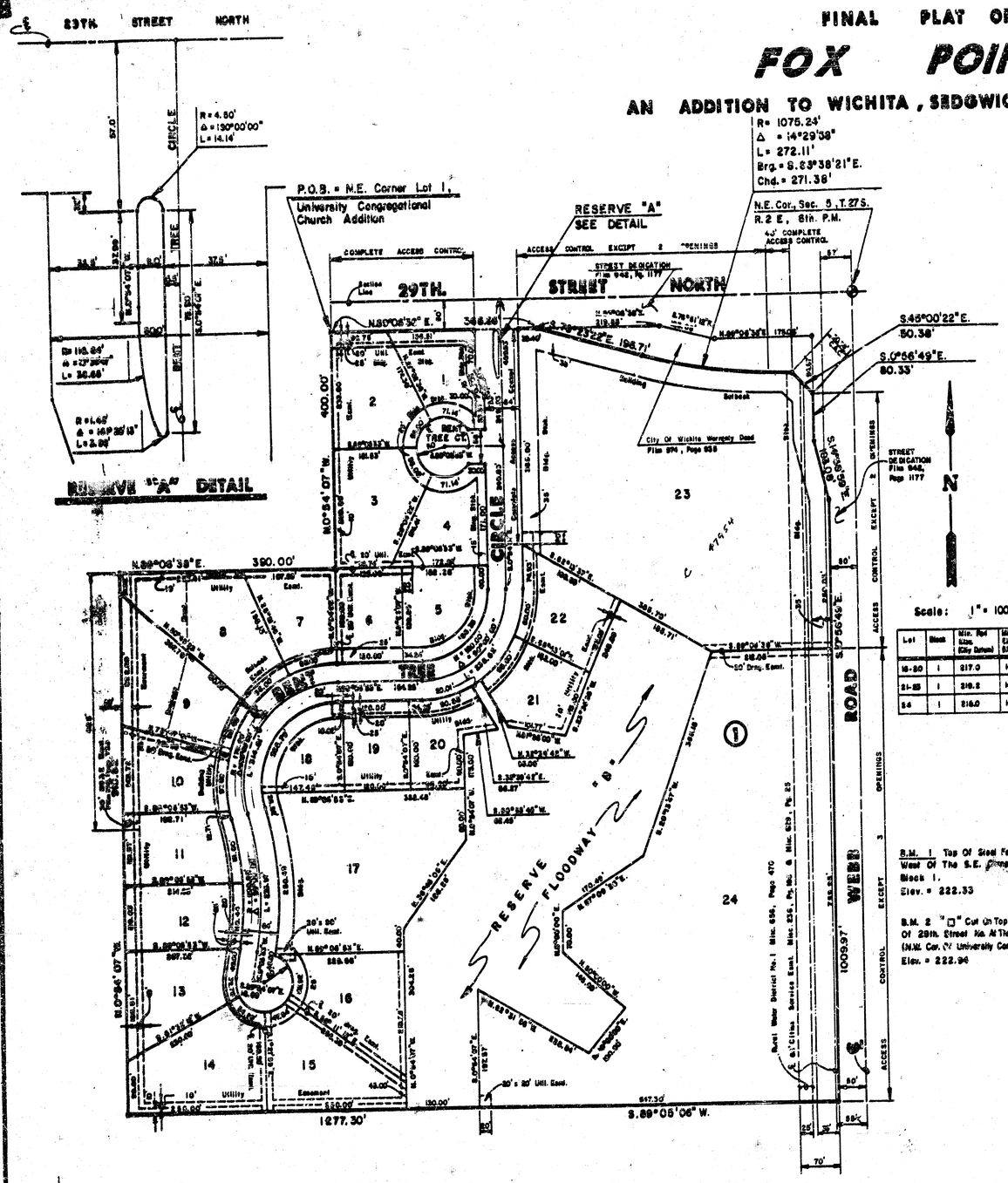

Lot	Block	Min. Bot Elev. (City Datum)	Min. Bot Elev. (USGS Datum)
16-20	1	1417.0	1404.4
21-23	1	1419.5	1406.9
24	1	1418.0	1405.4

B.M. 1 Top Of Steel Fence Post 4.5' West Of The S.E. Corner Of Lot 24 Block 1.
Elev. = 222.33

B.M. 2 "□" Cut On Top Of South Curb Of 29th Street No. At The E. Of Cypress (N.W. Cor. Of University Congregational Church Add.
Elev. = 222.96

I, Kenneth H. Bengtson, a Civil Engineer and Registered Land Surveyor in Kansas, do hereby certify that I have been in responsible charge of surveying and platting of "FOX POINTE" an addition to Wichita, Sedgwick County, Kansas, into Lots, Block, Streets, and Reserves the same being accurately set forth in the accompanying plat and described herein:

A tract of land lying in Government Lot 1, Section 5, Township 27 South, Range 2 East of the 6th P.M., Sedgwick County, Kansas, more particularly described as follows:

Beginning at the Northeast corner of Lot 1, University Congregational Church Addition, an addition to Wichita, Sedgwick County, Kansas; thence N 89° 06' 38" E, 366.66 feet, parallel and 30' South of the North line of said Government Lot 1; thence S 76° 23' 22" E, 196.71 feet to a point on a curve to the left; thence along said curve 272.11 feet, said curve having a central angle of 14° 29' 38"..a radius of 1075.24 feet and a long chord of 271.38 feet, bearing S 83° 38' 21" E; thence S 46° 00' 22" E, 50.38 feet; to a point lying 78.00 feet West of the East line of said Government Lot 1; thence S 00° 56' 49" E, 80.33 feet, parallel with the East line of said Government Lot 1; thence S 14° 58' 10" E, 102.04 feet to a point lying 50.00' West of the East line of said Government Lot 1; thence S 00° 56' 49" E, 1009.97 feet to the North line of Deer Run Addition, an addition to Wichita, Sedgwick County, Kansas; thence S 89° 06' 06" W, 1277.30 feet along the North line of said Deer Run Addition, to the East line of Wilderness 2nd Addition, an addition to Wichita, Sedgwick County, Kansas; thence N 00° 54' 07" W, 910.82 fee along the East line of said Wilderness 2nd Addition to the South line of said University Congregational Church Addition; thence N 89° 06' 38" E, 390.00 feet along the said South line of University Congregational Church Addition to the East line of said University Congregational Church Addition; thence N 00° 54' 07" W, 400.00 feet along said East line of University Congregational Church Addition to the point of beginning.

I hereby certify that the details of this plat are correct to the best of my knowledge and belief this 30 day of August, 1988.

Kenneth H. Bengtson, P.E., R.L.S. 7922
Mid-Kansas Engineering Consultants, P.A.
3500 N. Rock Road, Building #800
Wichita, Kansas 67226

KENNETH H. BENGTSON REGISTERED LS-922 KANSAS LAND SURVEYOR

Know all men by these presents that we the undersigned property owners of the land as shown set forth in the Land Surveyor's and Civil Engineers Certificates, have caused the same to be surveyed and platted into Lots, Block, streets and reserves the same to be known as "FOX POINTE" an addition to Wichita, Sedgwick County, Kansas. The streets are hereby dedicated to and for the use of the public. The Reserves shall be owned and maintained by the Homeowners Association. Reserve A is platted for landscaping and entry monuments. Reserve B is platted for drainage and related structures, floodway, walks, benches, landscaping, recreation facilities and picnic shelters. Easements for the construction and maintenance of public utilities and drainage as indicated on the accompanying plat are hereby granted. The Floodway shall be the responsibility of the owners until such time as the governing body exercising jurisdiction elects to assume the responsibility for the maintenance and improvement of the drainage, provided further, that no structure shall be construction on or within said floodway, nor shall any fill, change of grade, location of channel or other work be carried on without the approval of the City Engineer. All abutters right of access to or from 29th Street North over and across the North lines of Lots 1, 2 and 23, Block 1, are hereby granted to the City of Wichita, provided, however, Lot 23, Block 1 shall have access to 29th Street North at two (2) locations, all locations to be determined by the City Engineer. All abutters right of access to or from Webb Road over and across the East lines of Lots 23 and 24, Block 1, are hereby granted to the City of Wichita, provided, however that Lot 23, Block 1 shall have access to Webb Road at two (2) locations and Lot 24, Block 1 shall have access to Webb Road at three (3) locations, all locations to be determined by the City Engineer. Minimum pad elevations shall be as indicated on the face of the plat.

By: Richard J. Stites # 973717
Richard J. Stites

STATE OF KANSAS
SEDGWICK COUNTY } SS:

Be it remembered that on this 29 day of August, 1988, before me a Notary Public in and for said State and County, came Richard J. Stites, to me personally known to be the same person who executed the foregoing instrument of writing and duly acknowledged the execution of the same. In testimony whereof, I have hereunto set my hand and affixed my notarial seal the day and year above written.

Mary Ann Tate, Notary Public
Mary Ann Tate
My Appointment Expires: 8-9-92

Lot 1, Block 1, Lots 2 and 3, Block 2, Lots 1 and 2, Block 3, Lots 1 and 2, Block 4, Lots 1 and 2, Block 5, Lots 1 and 2, Block 6, Lots 1 and 2, Block 7, Lots 1 and 2, Block 8, Lots 1 and 2, Block 9, Lots 1 and 2, Block 10, Lots 1 and 2, Block 11, Lots 1 and 2, Block 12, Lots 1 and 2, Block 13, Lots 1 and 2, Block 14, Lots 1 and 2, Block 15, Lots 1 and 2, Block 16, Lots 1 and 2, Block 17, Lots 1 and 2, Block 18, Lots 1 and 2, Block 19, Lots 1 and 2, Block 20, Lots 1 and 2, Block 21, Lots 1 and 2, Block 22, Lots 1, 2 and 3, Block 23, Lots 1 and 2, Block 24, Reserve "A", Reserve "B"

STATE OF KANSAS
SEDGWICK COUNTY } SS:

Be it remembered that on this 29 day of August, 1988, before me a Notary Public in and for said State and County, came Richard J. Stites, to me personally known to be the same person who executed the foregoing instrument of writing and duly acknowledged the execution of the same. In testimony whereof, I have hereunto set my hand and affixed my notarial seal the day and year above written.

Mary Ann Tate, Notary Public
Mary Ann Tate
My Appointment Expires: 8-9-92

We, the Mid Kansas Federal Savings & Loan Association, Mortgagees on the above described property, do hereby consent to the plat of "Fox Pointe."

MID KANSAS FEDERAL SAVINGS & LOAN ASSOCIATION

By: Max L. Harper
Max L. Harper, Senior Vice-President

STATE OF KANSAS
SEDGWICK COUNTY } SS:

Be it remembered that on this 31st day of August, 1988, before me a Notary Public in and for said State and County, came the Mid Kansas Federal Savings & Loan Association, Wichita, Kansas, by Max L. Harper, Senior Vice-President to me personally known to be the same person who executed the foregoing instruments of writing and duly acknowledged the execution of the same. In testimony whereof, I have hereunto set my hand and affixed my notarial seal the day and year above written.

Karen L. Meyer, Notary Public
Karen L. Meyer
My Appointment Expires: 9/1/90

KARIN L. MEYER NOTARY PUBLIC STATE OF KANSAS

This plat of "FOX POINTE" has been submitted to and approved by the Wichita-Sedgwick County Metropolitan Area Planning Commission, Wichita, Kansas.

Dated this 18th day of August, 1988.

WICHITA-SEDGWICK COUNTY METROPOLITAN AREA PLANNING COMMISSION

Chairman

Secretary

This plat approved and all dedications shown hereon, if any, by the City Council of the City of Wichita, Kansas, this 2nd day of SEPT, 1988.

Sheldon Kamins, Mayor

Attest:

Dale E. Goter, Deputy City Clerk

Entered on transfer record this 6 day of Sept, 1988.

Don Wright, County Clerk

STATE OF KANSAS
SEDGWICK COUNTY } SS:

This is to certify that this instrument was filed for record in the Register of Deeds office this 6th day of SEPTEMBER, 1988, at 2:30 P.M.

Register of Deeds

Deputy

Fee Receipt

$6 Rcpd

Film Page
1427 1719

affidavit Film 1554 affidavit

20.00 ck

10 02 09 15