KANSAS CARDIOLOGY ASSOCIATES

Wichita, Kansas

Sanitary Sewer to serve part of Lot 1, Block 1, Mediterranean Office Park Addition

City of Wichita Private Project No. 1532PPS (607861)

Site Location

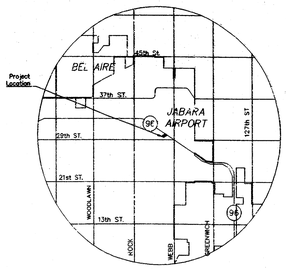

Legal Description

Plat of Survey
Portion of lot 1 of block 1 of
Mediterranean Office Park Addition,
GTB Enterprises, L.L.C. and
Cypress Medical Office Park, L.L.C.
to the City of Wichita,
Sedgewick County, Kansas.

Site Address

9300 E. 29th Street North
Wichita, KS 67226

Owner / Developer

Evans & Farhound Investment Co.
933 North Topeka
Wichita, KS 67214

Engineer

Marshall Erdman & Associates
Justin Zampardi
5117 University Avenue
Madison, WI 53705
(608) 218 – 6140

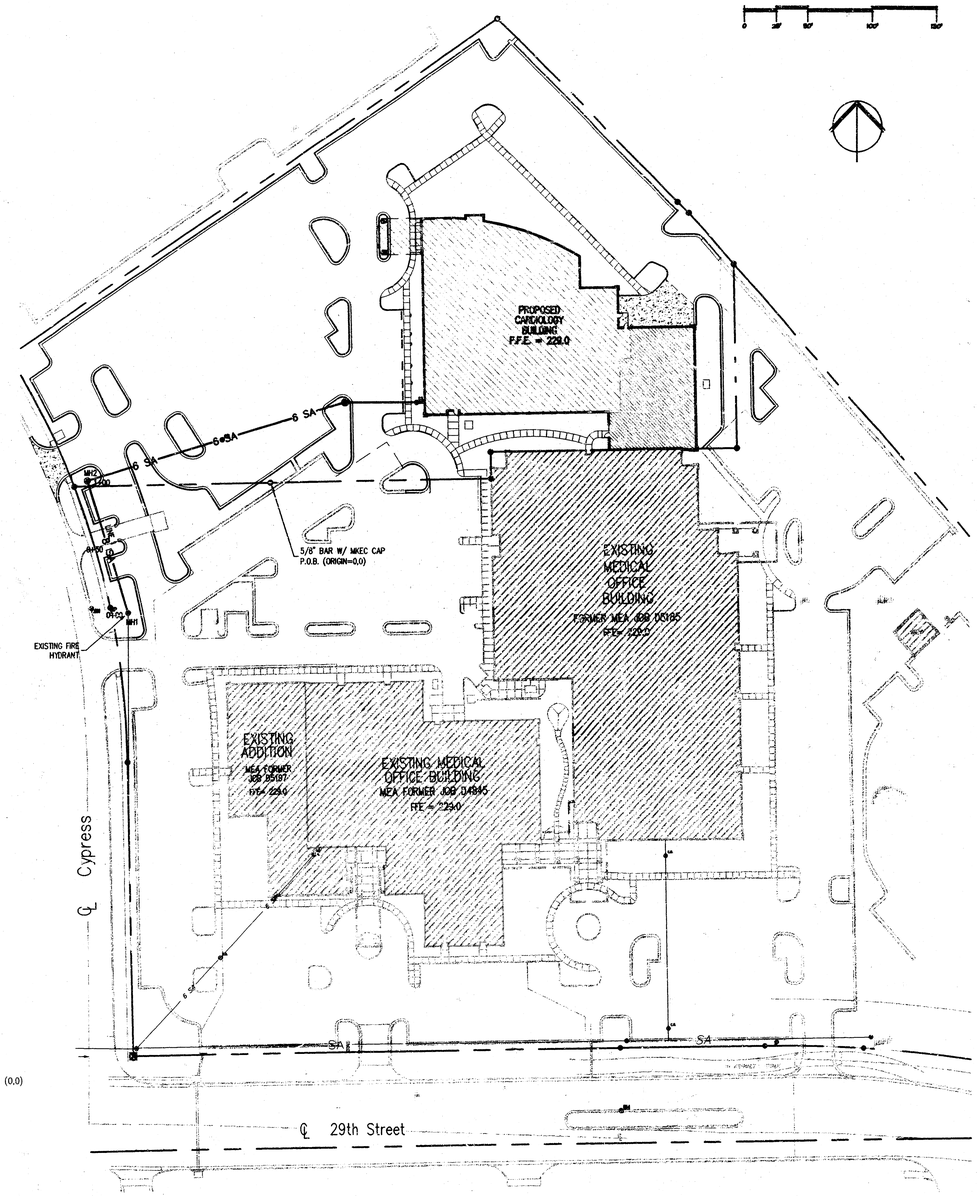

5/8" BAR W/ MKEC P.O.B. = ORIGIN (0,0)

Structure	Northing	Easting
MH1	-97.0	-110.4
MH2	2.0	-142.5

Sheet Index

CS.T	TITLE SHEET
CS.1	8" SANITARY SEWER–PLAN AND PROFILE
CS.2	DETAIL SHEET SANITARY LINE

General Notes

UNLESS SHOWN OR STATED OTHERWISE ON THESE DRAWINGS, MATERIALS AND CONSTRUCTION SHALL BE IN ACCORDANCE WITH CITY OF WICHITA STANDARD SPECIFICATIONS.

THE CONTRACTOR SHALL BE RESPONSIBLE FOR PRESERVING PROPERTY IRONS. THE CONTRACTOR WILL BE REQUIRED TO RE-ESTABLISH ANY PROPERTY IRONS WHICH ARE DAMAGED OR DESTROYED BY ITS CONSTRUCTION OPERATIONS. SUCH IRONS SHALL BE RE-ESTABLISHED BY A LICENSED LAND SURVEYOR IN ACCORDANCE WITH STATE LAWS.

EXISTING UTILITIES AND THEIR LOCATIONS, AS SHOWN ON THE PLANS REPRESENT THE BEST INFORMATION OBTAINABLE FOR DESIGN. LOCATION INFORMATION HAS BEEN OBTAINED FROM THE VARIOUS UTILITY COMPANIES AND IS EITHER FROM COMPANY RECORD DRAWINGS OR COMPANY PROVIDED FIELD LOCATIONS. THE PLAN LOCATIONS ARE NOT GUARANTEED. ADDITIONAL EXISTING UTILITIES MAY BE ENCOUNTERED.

CONTRACTOR WILL BE REQUIRED TO PROVIDE A MINIMUM ADVANCE NOTICE OF FORTY-EIGHT (48) HOURS TO UTILITY COMPANIES PRIOR TO STARTING ANY EXCAVATION AS FOLLOWS:

KANSAS ONE-CALL	1-800-344-7233
THE CONTRACTOR MUST NOTIFY THE FOLLOWING IN CASE OF AN EMERGENCY:	316-687-2470 (LOCAL WICHITA)
SOUTHWESTERN BELL TELEPHONE COMPANY	
COX CABLEVISION	
WESTAR ENERGY	1-800-734-7590
KANSAS GAS SERVICE	262-0661
CITY OF WICHITA WATER AND SEWER MAINT.	383-8600
AQUILA NETWORKS	383-8600
	262-6000
	1-800-303-0357

McCullough Excavation, Inc. - Contractor
Gann, KE Miller - Inspector
Released 8/5/05
Par Plan
Stub
.pdf by JDL 8/11/05

APPROVED AS NOTED
BY CITY ENGINEER OF WICHITA,
BY WICHITA WATER & SEWER DEPARTMENT,
& BY WICHITA FIRE DEPARTMENT
Sanitary Sewer VRH 3/24/05

NOTE TO CONTRACTORS
Public Property:
Inspection and testing for the waterline is to be provided by a Licensed Consulting Engineering Firm under contract with the Owner/Developer. Said inspection to be in accordance with the City of Wichita standard construction engineering practices and certified by a Professional Engineer Licensed in the state of Kansas. No work shall be performed in dedicated easements or public right-of-way by the Contractor until such inspection is arranged for and required bonds have been submitted and approved by the City nor shall any work be commenced without written authorization by the City Engineer. All Construction and Materials shall comply with the City or Wichita Specifications and Standards (on file and available in the City Engineer's Office).

AS-BUILT
8/1/05
Date
K.E. Miller

Marshall Erdman & Associates
3001 Summit Ave. Suite 200
Plano, Texas 75074
Phone: (972) 881-0882
FAX: (972) 881-0314

KANSAS CADIOLOGY ASSOC.

CYPRESS MEDICAL OFFICE PARK

3/24/05

Document Release

3-7-05	SANITARY LINE SUBMITTAL
3-16-05	SANITARY REVISED 1

Drn: jzampardi Chk: tanchenbrenner

Sheet Name
TITLE SHEET

Scale: NONE

Sheet Number
CS.T

WICHITA, KS
542120

No. document, the designs and descriptions contained herein are the proprietary materials of Marshall Erdman & Associates, Inc. ©Copyright 2005, all rights reserved. Any reproduction, copies or modifications of these materials in whole or in part is strictly prohibited without the express written permission of Marshall Erdman & Associates, Inc.

18 11 01 10

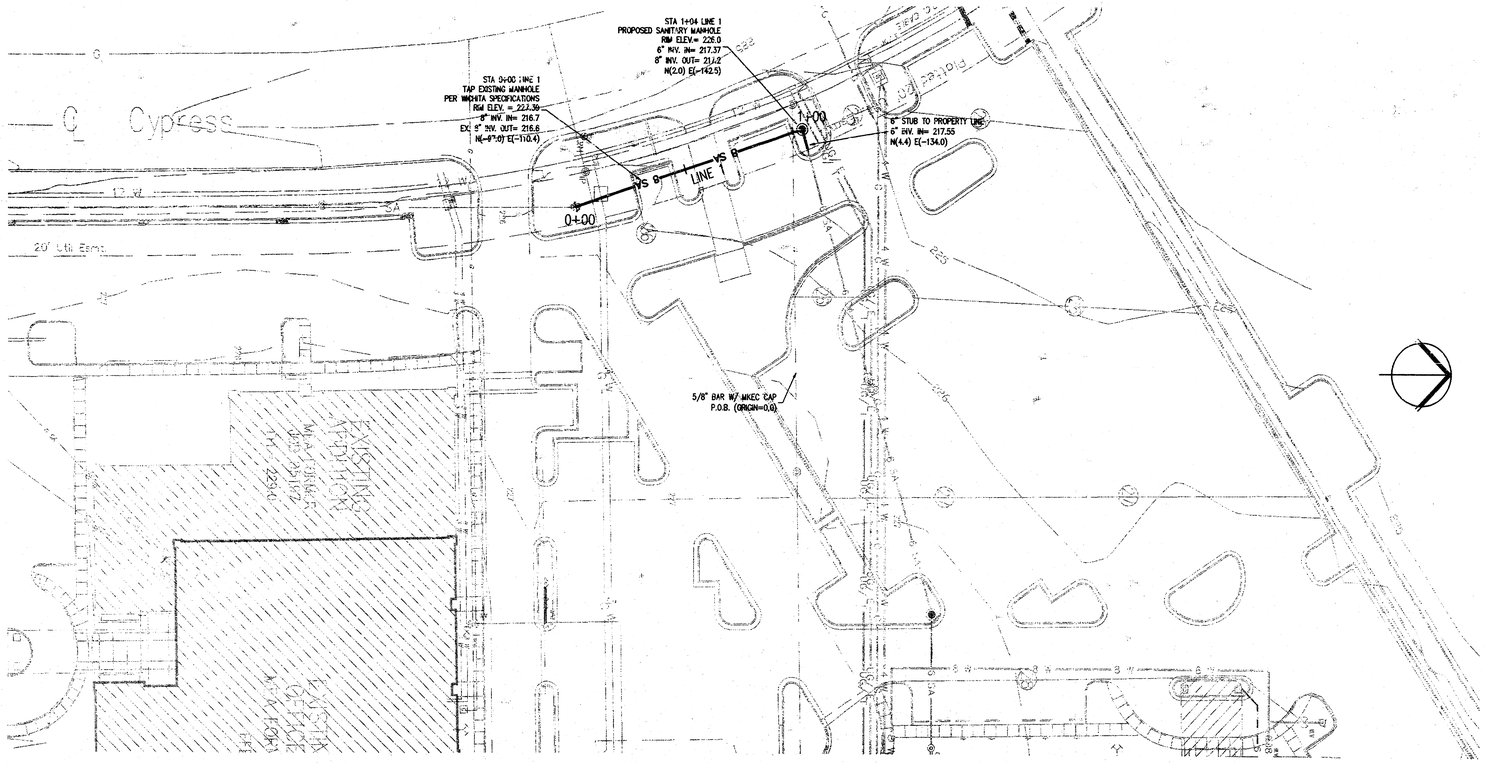

PLAN LINE 1

SCALE: 1" = 40'

0 20 40 80 120

PROFILE LINE 1

SCALE HORIZONTAL: 1" = 40'
SCALE VERTICAL: 1" = 5'

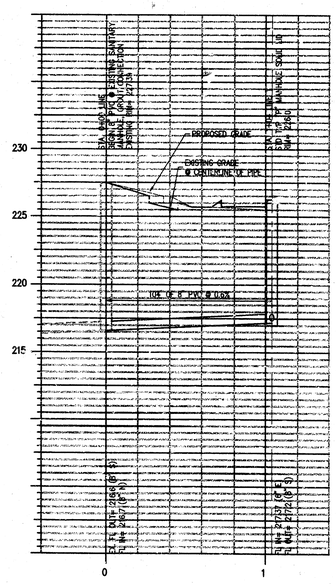

Marshall Erdman & Associates

3001 Summit Ave. Suite 200
Plano, Texas 75074
Phone: (972) 881-0882
FAX: (972) 881-0314

KANSAS CADIOLOGY ASSOC.

CYPRESS MEDICAL OFFICE PARK

LICENSED PROFESSIONAL ENGINEER 15727 STATE OF KANSAS

Document Release

3-7-05	SANITARY LINE SUBMITTAL
3-16-05	SANITARY REVISED 1

Drn: jzampardi Chk: taschenbrenner

Sheet Name

8" SANITARY LINE - PLAN AND PROFILE

Scale: AS SHOWN

Sheet Number

CS.1

WICHITA, KS
542120

The drawings and descriptions contained herein are the property exclusively of Marshall Erdman & Associates, Inc. © Copyright 2005, all rights reserved. Any reproduction, distribution or modification of these materials in whole or in part is strictly prohibited without the express written permission of Marshall Erdman & Associates, Inc.

I:\Drawing_Information-542120\autocad\xrefs_CUT_IN\dwg_S\8\2005 8:30:32 AM, jzampardi, (XrefsCS_BAS, ALIEN, TZ_BAS)

SEWER APPURTENANCES DETAILS

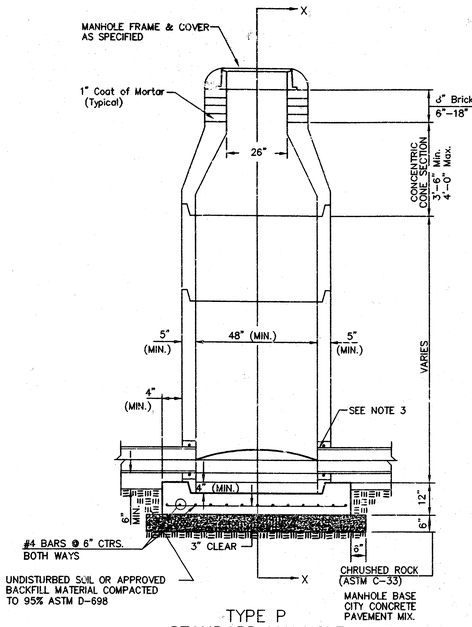

TYPE P
STANDARD MANHOLE

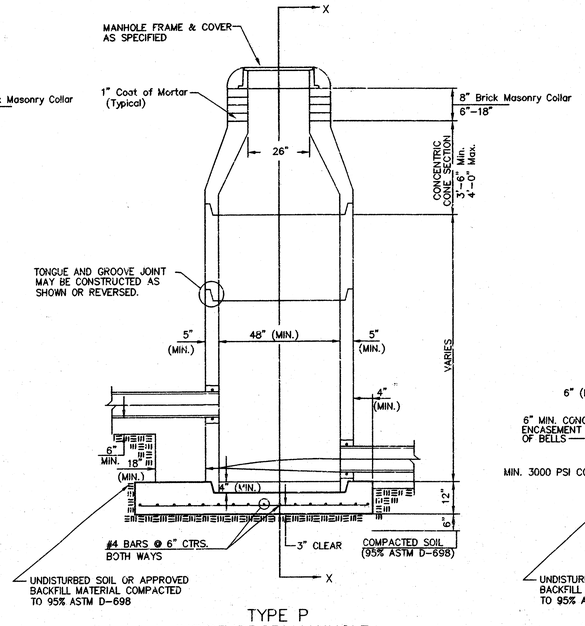

TYPE P
INSIDE DROP MANHOLE

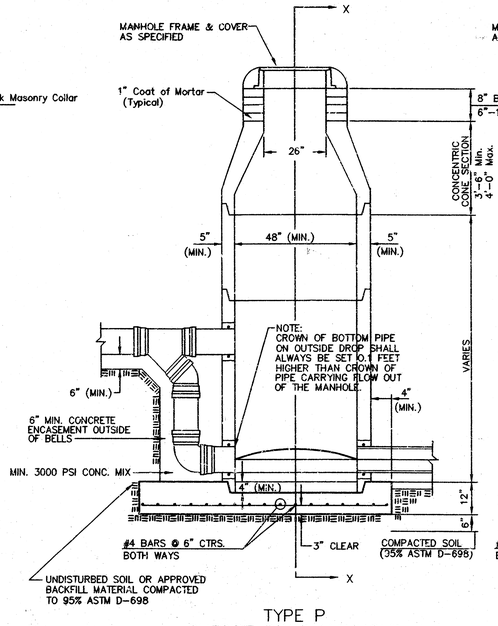

TYPE P
OUTSIDE DROP MANHOLE

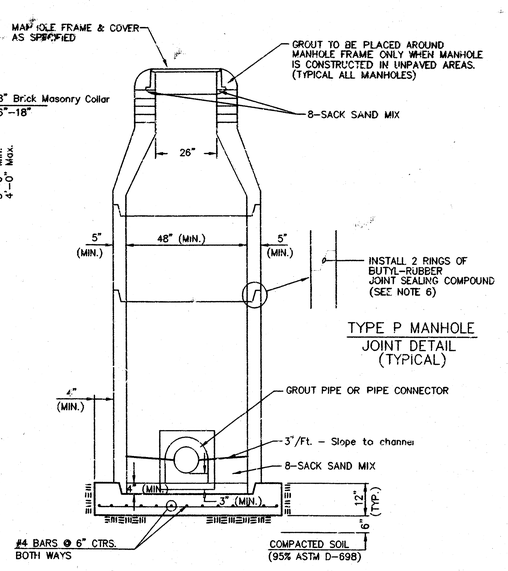

TYPE P MANHOLE
JOINT DETAIL
(TYPICAL)

SECTION X
(TYPICAL)

GENERAL NOTES

PRECAST MANHOLE NOTES

1. ALL PRECAST CONCRETE MANHOLE SECTIONS SHALL CONFORM TO THE LATEST REVISIONS OF A.S.T.M. C478 AS MODIFIED BY THE SPECIFICATIONS.
2. NON-SHRINK GROUT SHALL BE NON-METALLIC TYPE.
3. APPROVED FLEXIBLE WATERSTOP GASKETS SHALL BE INSTALLED TO JOIN THE SEWER TO THE MANHOLE WALL WHEN A.B.S. COMPOSITE PIPE OR P.V.C. PIPE IS USED. FOR OTHER TYPES OF PIPE THE SEWER SHALL BE GROUTED IN PLACE WITH NON-SHRINK GROUT. THE SEWER PIPE SHALL BE SUPPORTED WITH CONCRETE ENCASEMENT A MINIMUM OF 3 FEET FROM THE MANHOLE WALL AND TO THE FIRST JOINT FOR V.C.P. SUCH THAT THE JOINT REMAINS FLEXIBLE.
4. ALL INSIDE SURFACES OF THE CONCRETE MANHOLE WHICH WOULD BE EXPOSED TO SEWER GAS SHALL BE COATED WITH 2 COATS TNEMEC SERIES 66 HI-BUILD EPOXOLINE, DRY THICKNESS OF 8 MILS (MIN.)
5. EXTERIOR MANHOLE WALLS SHALL BE COATED WITH 1 COAT MOBILARMA 633 BITUMINOUS COATING.
6. JOINT SEALING COMPOUND SHALL BE KENT SEAL NO. 2 OR APPROVED EQUAL.
7. PRECAST MANHOLES SHALL BE SET AT LEAST 4 INCHES INTO THE MANHOLE BASE.
8. TOP OF MANHOLE FLOOR SLAB SHALL BE AT LEAST 3 INCHES BELOW THE FLOW LINE OF THE OUTLET PIPE TO INSURE SUFFICIENT MINIMUM THICKNESS OF SHAPED INVERT.
9. LIFTING HOLES SHALL BE FILLED WITH NON-SHRINK GROUT AND THE INTERIOR SURFACE COATED AS SPECIFIED.
10. MORTAR USED IN MASONRY CONSTRUCTION SHALL CONTAIN 8 SACKS OF CEMENT PER CUBIC YARD. CONCRETE USED IN MANHOLE BASES SHALL CONFORM TO THE REQUIREMENTS OF CONCRETE FOR CONCRETE PAVEMENT CONSTRUCTION AS SPECIFIED IN THE CITY STANDARD PAVING SPECIFICATIONS USING CITY CONCRETE PAVEMENT MIX WITHOUT AIR ENTRAINING ADMIXTURE. MORTAR SHALL BE PLACED AROUND THE MANHOLE RING AS SHOWN ON THE DRAWINGS WHEN MANHOLES ARE CONSTRUCTED IN UNPAVED AREAS. MANHOLES CONSTRUCTED WHERE PIPE SIZES ARE SMALLER THAN 24" SHALL HAVE AN INSIDE DIAMETER OF 4'. MANHOLES CONSTRUCTED WHERE PIPE SIZES ARE 24" OR LARGER SHALL HAVE AN INSIDE DIAMETER OF 5'. COMPLETED MANHOLE SHALL BE WITHOUT LEAKS AND WATER TIGHT.
11. REINFORCING STEEL SHALL BE INSTALLED IN THE MANHOLE BASES AND SHALL CONSIST OF NO. 4 BARS PLACED ON 6" CENTERS IN BOTH DIRECTIONS. THE MANHOLE BASE REINFORCEMENT SHALL BE PLACED AT LEAST 3" ABOVE THE BOTTOM OF THE MANHOLE BASE. ALL COSTS FOR FURNISHING AND INSTALLING REINFORCING STEEL SHALL BE INCLUDED IN THE UNIT PRICE BID FOR THE MANHOLE.
12. OPENINGS SHALL BE CUT INTO THE MANHOLE WALL WHEN OUTSIDE DROPS ARE CONSTRUCTED ON EXISTING MANHOLES. SUCH OPENINGS CUT INTO EXISTING MANHOLES SHALL BE AS SMALL AS PRACTICAL TO FACILITATE INSTALLING AND GROUTING THE NEW PIPE IN PLACE. WATERSTOP GASKETS SHALL BE USED WITH P.V.C. AND A.B.S. COMPOSITE PIPE. THE NEW PIPE SHALL BE GROUTED INTO THE OPENING USING AN APPROVED NONSHRINK GROUT FOR THE FULL MANHOLE WALL THICKNESS. THE EXTERIOR OF THE COMPLETED CONNECTION SHALL BE SEALED WITH AN APPROVED BITUMINOUS COATING SUCH THAT THE CONNECTION WILL BE WATER TIGHT. FLOOR OF MANHOLE SHALL BE MODIFIED TO FORM NEW FLOW CHANNEL FOR THE NEW CONNECTION AS INDICATED BY THE DRAWING. THIS WORK, INCLUDING MODIFICATION OF MANHOLE FLOOR, SHALL BE PAID FOR AT THE UNIT PRICE BID FOR OUTSIDE DROP STACK CONSTRUCTED ON EXISTING MANHOLE.
13. THE FLOORS OF ALL MANHOLES SHALL BE SHAPED WITH FLOW CHANNELS SUCH THAT THE MANHOLES WILL BE SELF CLEANING AND FREE OF AREAS WHERE SOLIDS COULD BE DEPOSITED AS SEWAGE FLOWS THROUGH THE MANHOLE FROM ALL INLET PIPES TO THE OUTLET PIPE. FLOW CHANNELS SHALL BE FORMED TO MATCH THE BOTTOM HALVES OF THE INFLOWING PIPES AND THE OUTFLOWING PIPE AS SHOWN BY THE DRAWINGS EXCEPT FOR INSIDE DROP MANHOLES. FLOW CHANNELS FOR INSIDE DROP MANHOLES SHALL BE CONSTRUCTED AS INDICATED BY THE DRAWING. MANHOLE FLOORS SHALL HAVE SLOPES OF 3 INCHES PER FOOT IN THE AREAS OUTSIDE OF THE FLOW CHANNELS SLOPED TOWARD THE FLOW CHANNELS. PIPES LAID THROUGH MANHOLES SHALL HAVE THE TOP HALF REMOVED TO NEAT LINES TO THE FULL INSIDE DIAMETER OF THE MANHOLE. MANHOLE FLOORS SHALL THEN BE SHAPED AROUND THE BOTTOM HALF OF THE PIPE WHICH FORMS THE FLOW CHANNEL.
14. PIPES INSTALLED WITHIN THE EXCAVATION MADE FOR THE MANHOLE SHALL BE CRADLED WITH CONCRETE TO THE LIMITS OF THE MANHOLE EXCAVATION. WHEN CLAY PIPE IS USED, THE CRADLE SHALL EXTEND TO THE FIRST JOINT OUTSIDE THE MAHOLE. THE CRADLE SHALL BE TERMINATED AT THE CLAY PIPE JOINT IN A MANNER WHICH WILL MAINTAIN THE FLEXIBILITY OF THE JOINT. COST OF CRADLE WITHIN MANHOLE EXCAVATION OR TO CLAY PIPE JOINTS ADJACENT TO MANHOLE SHALL BE INCLUDED IN THE UNIT PRICE BID FOR THE MANHOLE.
15. MANHOLE COVER CASTINGS AND MANHOLE FRAME CASTINGS SHALL CONFORM TO THE REQUIREMENTS AS INDICATED IN THE STANDARD SPECIFICATIONS AND AS SHOWN IN THE STANDARD DETAIL DRAWING.
16. THE VERTICAL DROP IN INSIDE DROP MANHOLES SHALL NOT EXCEED 2' FOR INFLOWING PIPES SIZED 12" OR SMALLER AND 2' FOR INFLOWING PIPES LARGER THAN 12". THE CROWNS OF INFLOWING PIPES SHALL NEVER BE SET LOWER THAN THE CROWN OF THE OUTFLOWING PIPE.
17. STANDARD MANHOLES AND STANDARD INSIDE DROP MANHOLES SHALL BE BID AS STANDARD MANHOLES FOR THE TYPE AND DIAMETER INDICATED. OUTSIDE DROP MANHOLES SHALL BE BID AS STANDARD OUTSIDE DROP MANHOLES FOR THE TYPE AND DIAMETER INDICATED. ALL MANHOLE DIAMETERS WILL BE 4' UNLESS INDICATED OTHERWISE.
18. A BRICK MASONRY COLLAR SHALL BE INSTALLED BETWEEN THE CAST IRON FRAME AND THE CONCENTRIC CONE. THE COLLAR WILL HAVE 8" WALLS AND A VERTICAL HEIGHT OF 6" MINIMUM AND 18" MAXIMUM. A 1" COAT OF MORTAR WILL BE PLASTERED ON THE OUTSIDE OF THE COLLAR. THE USE OF PRE-CAST CONCRETE SPACERS FOR MANHOLE TOP ADJUSTMENT IS ALSO ALLOWED.
19. CHRUSHED ROCK CONFORMING TO ASTM C-33 WITH A GRADATION OF NO. 67 SHALL BE INSTALLED AT THE BASE OF THE MANHOLE TO A DEPTH OF NO LESS THAN 6", AND SHALL EXTEND NO LESS THAN 6" OUTSIDE THE DIAMETER OF THE CONCRETE FLOOR OF THE MANHOLE.

Marshall Erdman & Associates
3001 Summit Ave. Suite 200
Plano, Texas 75074
Phone: (972) 881-0282
FAX: (972) 881-0314

KANSAS CADIOLOGY ASSOC.

CYPRESS MEDICAL OFFICE PARK

Document Release

3-7-05	SANITARY LINE SUBMITTAL

Drn: jcampardi Chk: taschenbrenner

Sheet Name

DETAIL SHEET SANITARY LINE

Scale: As Shown

Sheet Number

CS.2

WICHITA, KS
542120

The Document, the ideas and designs incorporated herein, as the instruments of service, is and shall remain the property of Marshall Erdman & Associates, Inc. © Copyright 2005, all rights reserved. Any reproduction, alteration, modification or transfer of this document in any form or by any electronic process without the written permission of Marshall Erdman & Associates, Inc.