


(Min. 16 Perforations Per Lin. Ft. @ 1/4" Dia.)
Perforations To Be on Bottom Half

SECTION A–A

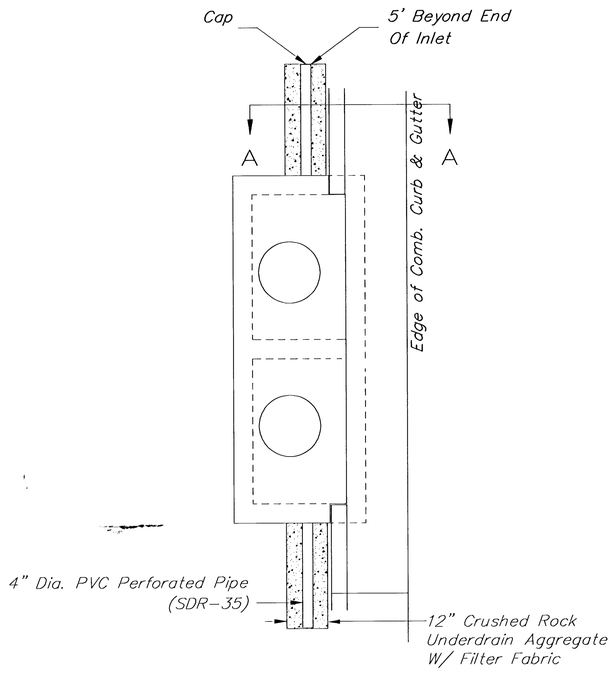


Type 1 & 2 Inlet

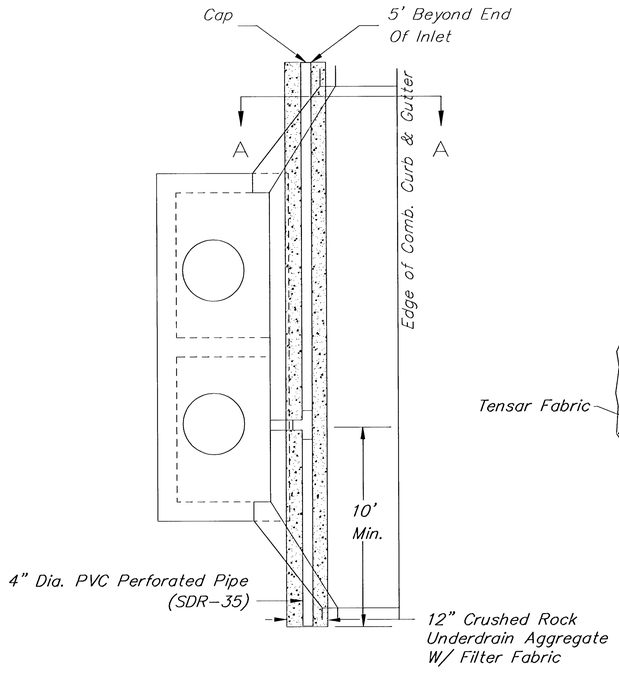


Type 1–A Inlet

CRUSHED ROCK GRADATION REQUIREMENTS
Percent of Aggregate Retained

| | |
|---|---|
| 1 1/2" | 0 |
| 3/4" | 15–60 |
| # 4 | 40–80 |
| #40 | 74–92 |
| P–200 | 4–12 |

Rock Quality Shall Be The Same As Specified
For Coarse Aggregate For Asphalt Concrete Mixes.

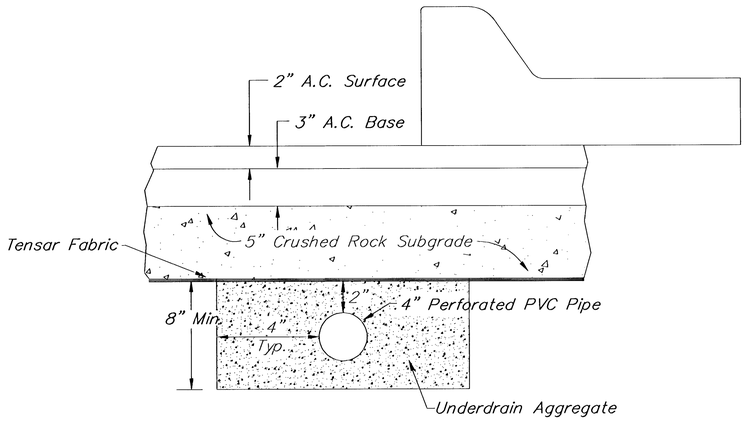


NOTE: Place 4" PVC Perforated Plpe at all drainage sump locations.

Cost of Underdrain System to be incidental to the Reinforced Crushed Rock Subgrade.

# PAVEMENT UNDERDRAIN DETAIL

PAVUDRDN1.DWG
REV. 11–22–00, MCG

THE CITY OF WICHITA
CITY ENGINEER'S OFFICE
CITY HALL – SEVENTH FLOOR
455 NORTH MAIN STREET
WICHITA, KANSAS 67202
(316) 268–4601
(316) 268–4114 FAX

PAVEMENT UNDERDRAIN DETAIL

JAMES ARMOUR P.E. – CITY ENGINEER

PROJECT NUMBER | INDEX CODE

DATE MAR 96

FINAL

Designed By: T. Austin/S. Schmidt
Drawn By: S. Schmidt
Poe Job No.: 1831A
Date: June 2005

Sheet 7 of 19

MEDITERRANEAN PLAZA ADDITION
PRIVATE STREET IMPROVEMENTS
PAVEMENT UNDERDRAIN DETAIL
CITY OF WICHITA, KANSAS
JAMES ARMOUR, P.E. – CITY ENGINEER
167 PPP (607879)

No. | Date | By | Approved | Revision

POE & ASSOCIATES, INC.
CONSULTING ENGINEERS
5940 E. Central, Suite 200 ■ Wichita, KS 67208-4242
Phone 316/683-4114 ■ FAX 316/683-4444

Y:\1831\1831Abase.dwg Thu Jun 23 11:32:09 2005 Steve Schmidt, Poe & Associates