Scale 1" = 50' (Horiz.)

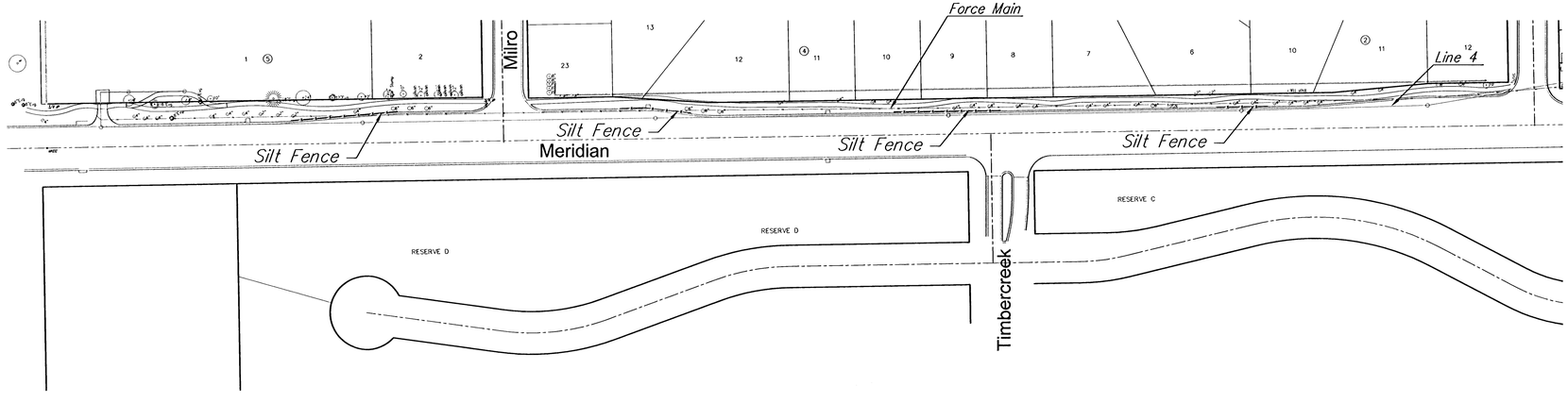

LEGEND

Silt Fence

Ditch Check

NOTE:
THE EROSION CONTROL MEASURES AS SHOWN ARE A MINIMUM AND SHOULD NOT BE CONSTRUED TO BE THE ONLY EROSION CONTROL REQUIRED. ADDITIONAL EROSION CONTROL WILL BE REQUIRED AT ANY LOCATION WHERE THERE IS OFF SITE SILT TRANSPORT. THE ADDITIONAL EROSION CONTROL SHALL BE CONSIDERED AS SUBSIDIARY TO THE EROSION CONTROL BID ITEMS.

13813

EROSION CONTROL PLAN
NORTH AREA INTERCEPTOR
WICHITA, KANSAS

Ruggles & Bohm, P.A.
Engineering, Surveying, Land Planning
924 North Main
Wichita, Kansas 67203
www.rbkansas.com
(316) 264-8008
(316) 264-4621 fax
E-mail: info@rbkansas.com

DESIGN PDC
DRAWN PDC
REVIEW
UTILITY
DATE 1/4/06

BID JOB 2627A

SHEET 29 OF 44

DRAWING FILE Engineering Base/ E CON

PROJECT NUMBER 468-83682

Scale 1" = 50' (Horiz.)

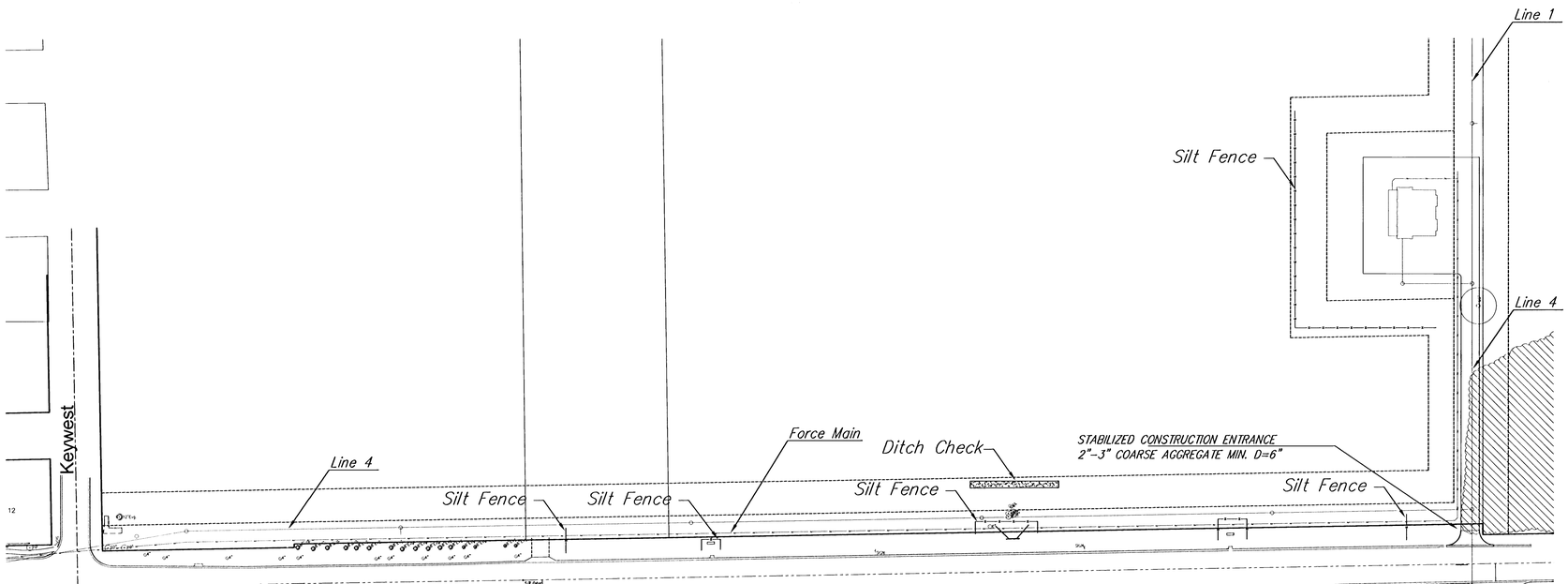

Scale 1" = 50' (Horiz.)

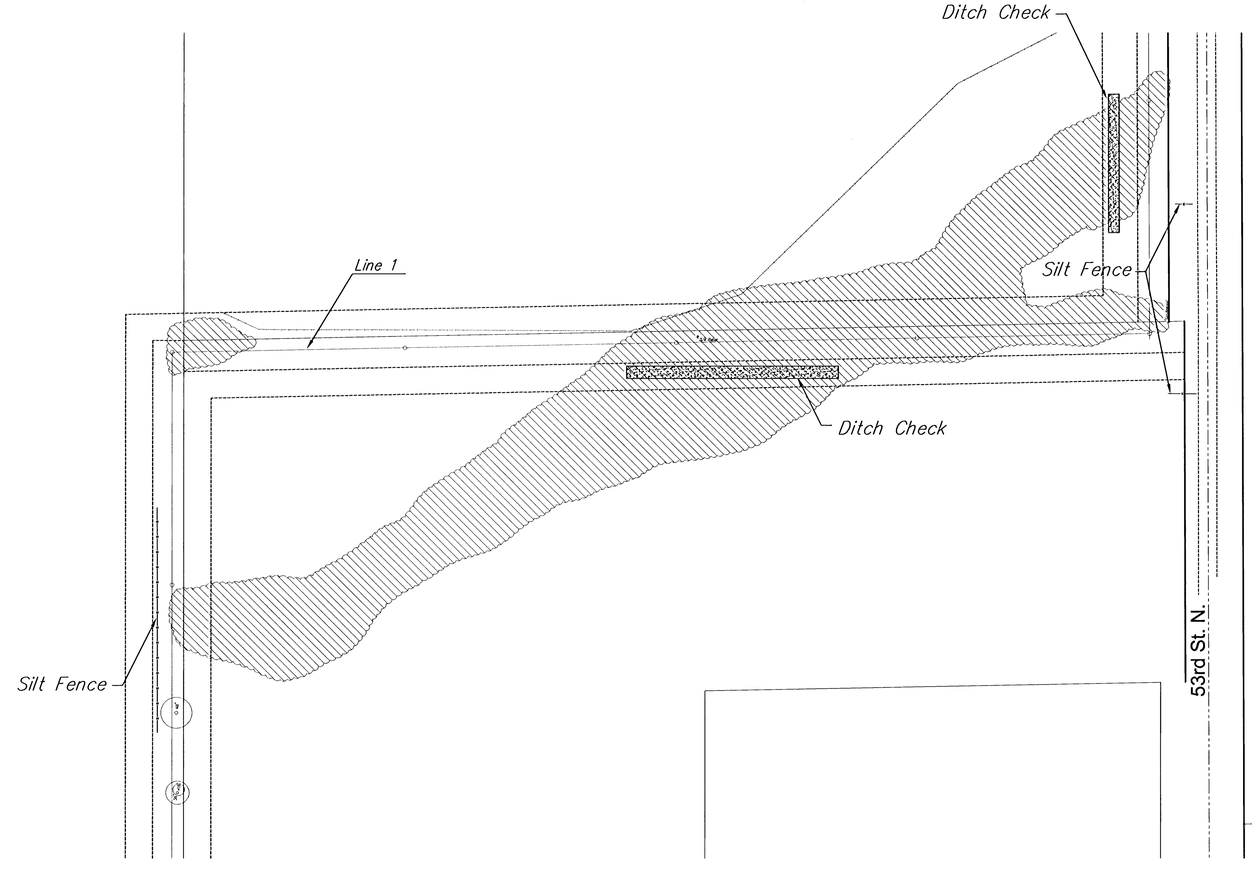

LEGEND

Silt Fence

Ditch Check

NOTE:
THE EROSION CONTROL MEASURES AS SHOWN ARE A MINIMUM AND SHOULD NOT BE CONSTRUED TO BE THE ONLY EROSION CONTROL REQUIRED. ADDITIONAL EROSION CONTROL WILL BE REQUIRED AT ANY LOCATION WHERE THERE IS OFF SITE SILT TRANSPORT. THE ADDITIONAL EROSION CONTROL SHALL BE CONSIDERED AS SUBSIDIARY TO THE EROSION CONTROL BID ITEMS.

EROSION CONTROL PLAN
NORTH AREA INTERCEPTOR
WICHITA, KANSAS

Ruggles & Bohm, P.A.
Engineering, Surveying, Land Planning
924 North Main
Wichita, Kansas 67203
www.rbkansas.com
(316) 264-8008
(316) 264-4621 fax
E-mail: info@rbkansas.com

DESIGN PDC
DRAWN PDC
REVIEW
UTILITY
DATE 1/4/06

BID JOB 2027A

SHEET 31 OF 44

DRAWING FILE Engineering Base/ E CON

PROJECT NUMBER 468-83682

Scale 1" = 50' (Horiz.)

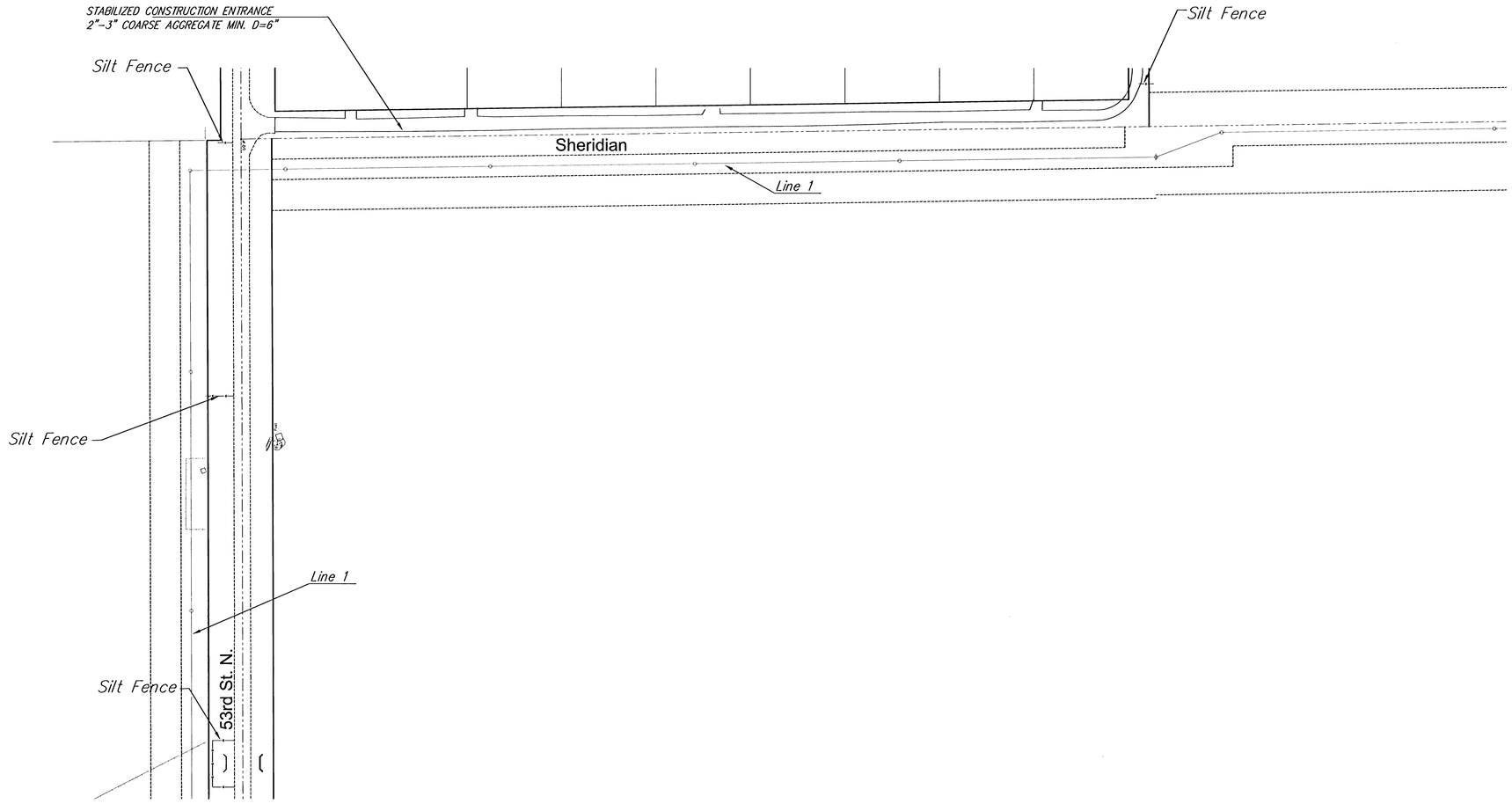

LEGEND

Silt Fence

Ditch Check

NOTE:
THE EROSION CONTROL MEASURES AS SHOWN ARE A MINIMUM AND SHOULD NOT BE CONSTRUED TO BE THE ONLY EROSION CONTROL REQUIRED. ADDITIONAL EROSION CONTROL WILL BE REQUIRED AT ANY LOCATION WHERE THERE IS OFF SITE SILT TRANSPORT. THE ADDITIONAL EROSION CONTROL SHALL BE CONSIDERED AS SUBSIDIARY TO THE EROSION CONTROL BID ITEMS.

13846

EROSION CONTROL PLAN
NORTH AREA INTERCEPTOR
WICHITA, KANSAS

Ruggles & Bohm, P.A.
Engineering, Surveying, Land Planning
924 North Main
Wichita, Kansas 67203
www.rbkansas.com
(316) 264-8008
(316) 264-4621 fax
E-mail: info@rbkansas.com

DESIGN	PDC
DRAWN	PDC
REVIEW	
UTILITY	
DATE	1/4/06
DRAWING FILE	Engineering Base/ E CON
PROJECT NUMBER	468-83682
RB JOB	26277X
SHEET	32 OF 44

Scale 1" = 50' (Horiz.)

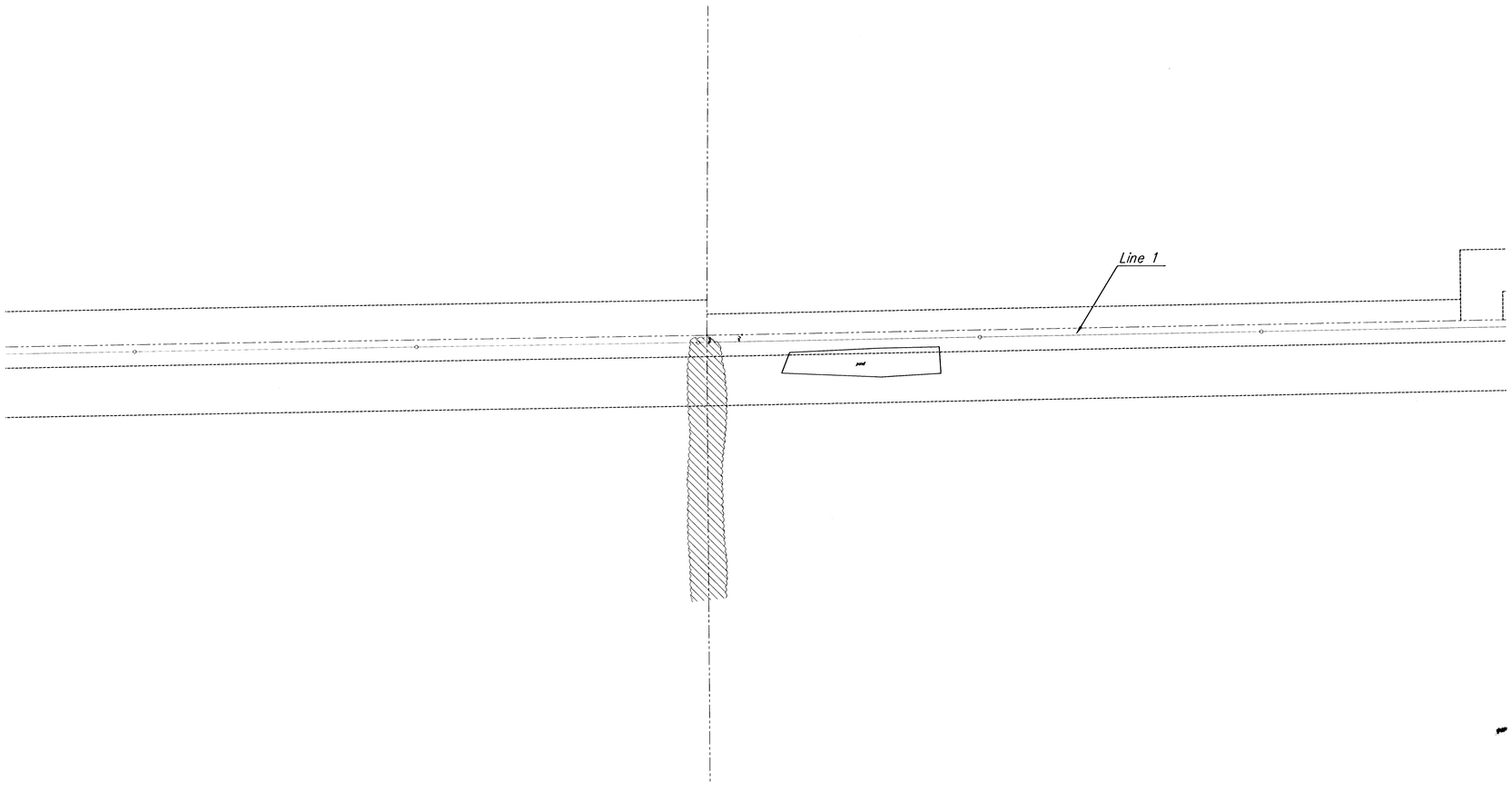

LEGEND

Silt Fence

Ditch Check

NOTE:
THE EROSION CONTROL MEASURES AS SHOWN ARE A MINIMUM AND SHOULD NOT BE CONSTRUED TO BE THE ONLY EROSION CONTROL REQUIRED. ADDITIONAL EROSION CONTROL WILL BE REQUIRED AT ANY LOCATION WHERE THERE IS OFF SITE SILT TRANSPORT. THE ADDITIONAL EROSION CONTROL SHALL BE CONSIDERED AS SUBSIDIARY TO THE EROSION CONTROL BID ITEMS.

13340 REGISTERED PROFESSIONAL ENGINEER STATE OF KANSAS

SANITARY SEWER EXTENSIONS
NORTH AREA INTERCEPTOR
WICHITA, KANSAS

Ruggles & Bohm, P.A.
Engineering, Surveying, Land Planning
924 North Main
Wichita, Kansas 67203
www.rbkansas.com
(316) 264-8008
(316) 264-4621 fax
E-mail: info@rbkansas.com

DRAWING FILE: Engineering Base/ E CON
PROJECT NUMBER: 468-83682

DESIGN: PDC
DRAWN: PDC
REVIEW:
UTILITY:
DATE: 1/4/06

RB JOB: 2825

SHEET 33 OF 44

Scale 1" = 50' (Horiz.)

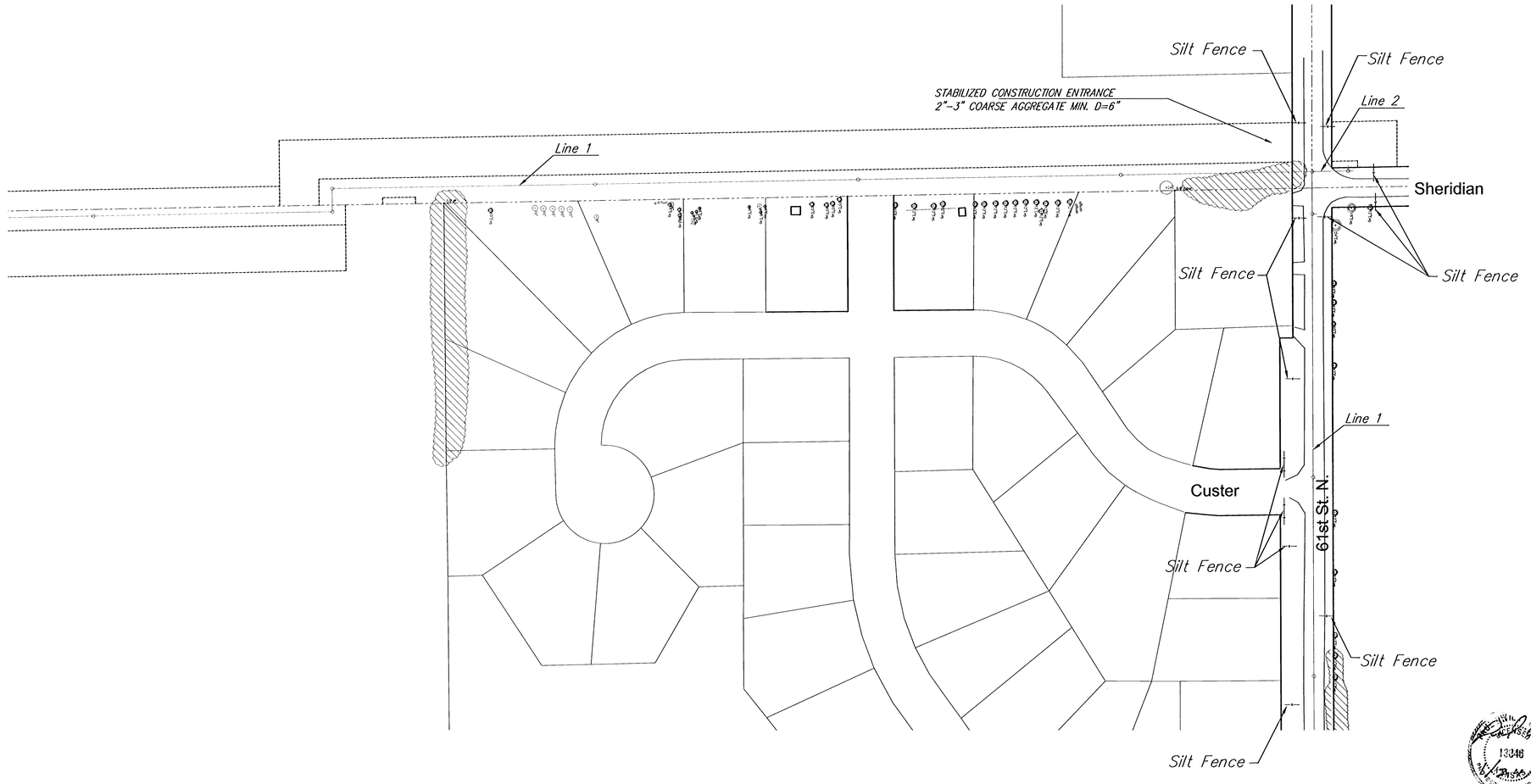

LEGEND

Silt Fence

Ditch Check

NOTE:
THE EROSION CONTROL MEASURES AS SHOWN ARE A MINIMUM AND SHOULD NOT BE CONSTRUED TO BE THE ONLY EROSION CONTROL REQUIRED. ADDITIONAL EROSION CONTROL WILL BE REQUIRED AT ANY LOCATION WHERE THERE IS OFF SITE SILT TRANSPORT. THE ADDITIONAL EROSION CONTROL SHALL BE CONSIDERED AS SUBSIDIARY TO THE EROSION CONTROL BID ITEMS.

EROSION CONTROL PLAN
NORTH AREA INTERCEPTOR
WICHITA, KANSAS

Ruggles & Bohm, P.A.
Engineering, Surveying, Land Planning
924 North Main
Wichita, Kansas 67203
www.rbkansas.com
(316) 264-8008
(316) 264-4621 fax
E-mail: info@rbkansas.com

DESIGN	PDC
DRAWN	PDC
REVIEW	
UTILITY	
DATE	1/4/06
RB JOB	2627X
SHEET	34 OF 44
DRAWING FILE	Engineering Base/ E CON
PROJECT NUMBER	468-83682

Scale 1" = 50' (Horiz.)

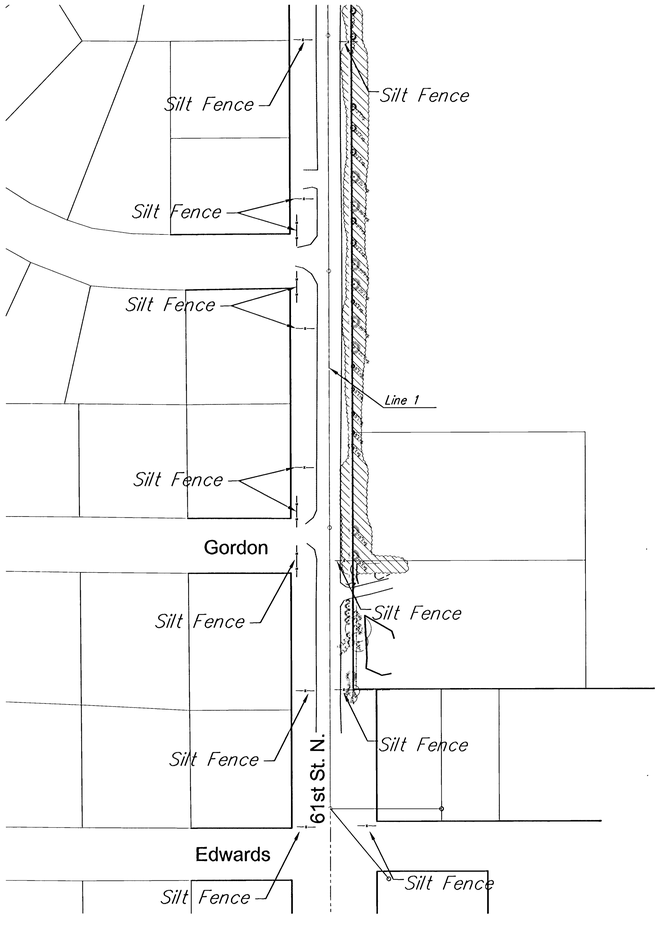

LEGEND

Silt Fence

Ditch Check

NOTE:
THE EROSION CONTROL MEASURES AS SHOWN ARE A MINIMUM AND SHOULD NOT BE CONSTRUED TO BE THE ONLY EROSION CONTROL REQUIRED. ADDITIONAL EROSION CONTROL WILL BE REQUIRED AT ANY LOCATION WHERE THERE IS OFF SITE SILT TRANSPORT. THE ADDITIONAL EROSION CONTROL SHALL BE CONSIDERED AS SUBSIDIARY TO THE EROSION CONTROL BID ITEMS.

SANITARY SEWER EXTENSIONS
NORTH AREA INTERCEPTOR
WICHITA, KANSAS

Ruggles & Bohm, P.A.
Engineering, Surveying, Land Planning
924 North Main
Wichita, Kansas 67203
www.rbkansas.com
(316) 264-8008
(316) 264-4621 fax
E-mail: info@rbkansas.com

DESIGN	PDC
DRAWN	PDC
REVIEW	
UTILITY	
DATE	1/4/06
DRAWING FILE	Engineering Base/ E CON
PROJECT NUMBER	468-83682
RB JOB	2627X
SHEET	35 OF 44

Scale 1" = 50' (Horiz.)

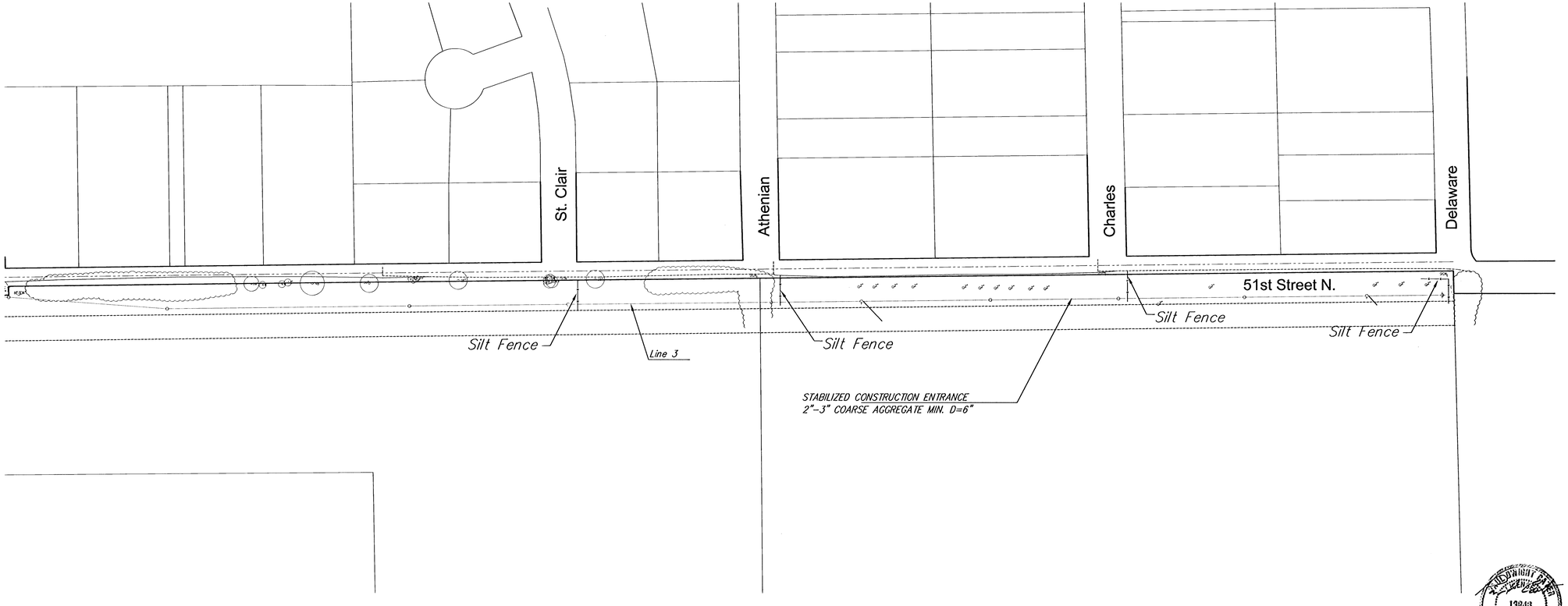

LEGEND

Silt Fence

Ditch Check

NOTE:
THE EROSION CONTROL MEASURES AS SHOWN ARE A MINIMUM AND SHOULD NOT BE CONSTRUED TO BE THE ONLY EROSION CONTROL REQUIRED. ADDITIONAL EROSION CONTROL WILL BE REQUIRED AT ANY LOCATION WHERE THERE IS OFF SITE SILT TRANSPORT. THE ADDITIONAL EROSION CONTROL SHALL BE CONSIDERED AS SUBSIDIARY TO THE EROSION CONTROL BID ITEMS.

EROSION CONTROL MAP
NORTH AREA INTERCEPTOR
WICHITA, KANSAS

Ruggles & Bohm, P.A.
Engineering, Surveying, Land Planning
924 North Main
Wichita, Kansas 67203
(316) 264-8008
(316) 264-4621 fax
www.rbkansas.com
E-mail: info@rbkansas.com

DESIGN	PDC
DRAWN	PDC
REVIEW	
UTILITY	
DATE	1/4/06
BK-PG	2007A
SHEET	36 OF 44
DRAWING FILE	Engineering Base/ E CON
PROJECT NUMBER	468-83682

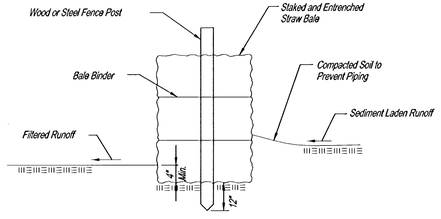

STRAW BALE BARRIERS

Material Specification:

Bale slope barriers may be constructed of wheat straw, oat straw, prairie hay, or bromegrass hay that is free of weeds declared noxious by the Kansas State Board of Agriculture.
The stakes used to anchor the bales should be a hardwood material with the following minimum dimensions: 2" square (nominal) by 4' long.

Placement:

A slope barrier should be used at the toe of a slope when a ditch does not exist. The slope barrier should be placed on nearly level ground 5' to 10' away from the toe of a slope. The barrier is placed away from the toe of the slope to provide adequate storage for settling out sediment.
When practicable, bale slope barriers should be placed along contours to avoid a concentration of flow.
Bale slope barriers can also be placed along right-of-way fence lines to keep sediment from crossing onto adjacent property. When placed in this manner, the slope barrier will not likely follow contours.

Proper installation method:

Excavate a trench the length of the planned slope barrier that is 4" deep and a bale's width wide. Make sure that the trench is excavated along a single contour. When practicable, slope barriers should be placed along contours to avoid a concentration of flow. Place the soil on the upslope side of the trench for later use.
Place the bales in the trench, making sure that they are butted tightly. Two stakes should be driven through each bale along the centerline of the ditch check, approximately 6" to 8" in from the bale ends. Stakes should be driven at least 12" into the ground.
Once all the bales have been installed and anchored, place the excavated soil against the upslope side of the check and compact it. The compacted soil should be no more than 3" to 4" deep.

List of common placement/installation mistakes to avoid:

When practicable, do not place bale slope barriers across contours. Slope barriers should be placed along contours to avoid a concentration of flow. Concentrated flow over a slope barrier creates a scour hole on the downslope side of the barrier. The scour hole eventually undermines the bales and the barrier fails.
Do not place bale slope barriers in areas with shallow soils underlain by rock. If the barrier is not anchored sufficiently, it will wash out.
Bale slope barriers must be dug into the ground. Bales at ground level do not work because they allow water to flow under the barrier.

Inspection and Maintenance:

Bale slope barriers should be inspected every 7 days and within 24 hours of a rainfall of 1/2" or more. The following is a list of questions that should be addressed during each inspection:

Are there any points along the slope barrier where water is concentrating?
Does water flow under the slope barrier?
Does water flow through spaces between abutting bales?
Are any bales dislodged?
Are bales decomposing due to age and/or water damage?
Does sediment need to be removed from behind the slope barrier?

NOTE: Point A must be higher than Point B so that water flows over the bales and not around them.

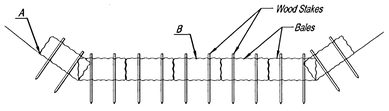

STRAW BALE DITCH CHECKS

Material Specification:

Bale ditch checks may be constructed of wheat straw, oat straw, prairie hay, or bromegrass hay that is free of weeds declared noxious by the Kansas State Board of Agriculture.
The stakes used to anchor the bales should be a hardwood material with the following minimum dimensions: 2" square (nominal) by 4' long.
Optional: The downstream scour apron should be constructed of a double-netted straw erosion-control blanket at least 6' wide.
Optional: The metal landscape staples used to anchor the erosion-control blanket should be at least 8" long.

Placement:

Bale ditch checks should be placed perpendicular to the flowline of the ditch.
The ditch check should extend far enough so that the ground level at the ends of the check is higher than the top of the lowest center bale. This prevents water from flowing around the check.
Checks should not be placed in ditches where high flows are expected. Rock checks should be used instead.
Bales should be placed in ditches with slopes of 6% or less. For slopes steeper than 6%, rock checks should be used.
The following table provides check spacing for a given ditch grade:

Ditch Check Spacing

Ditch grade (%)	Check Spacing (feet)
0.5	200
1.0	200
2.0	100
3.0	65
4.0	50
5.0	40
6.0	30

Proper installation method:

Excavate a trench perpendicular to the ditch flowline that is 4" deep and a bale's width wide. Extend the trench in a straight line along the entire length of the proposed ditch check. Place the soil on the upstream side of the trench--it will be used later.
Optional: On the downstream side of the trench, roll out a length of erosion-control blanket (scour apron) equal to the length of the trench. Place the upstream edge of the erosion-control blanket along the bottom upstream edge of the trench. The erosion control blanket should be anchored in the trench with one row of 8" landscape staples placed on 18" centers. The remainder of the erosion-control blanket (the portion that is not lying in the trench) will serve as the downstream scour apron. This section of the blanket should be anchored to the ground with 8" landscape staples placed around the perimeter of the blanket on 18" centers. The remainder of the blanket should be anchored using two evenly spaced rows of 8" landscape staples on 18" centers placed perpendicular to the flowline of the ditch.
Place the bales in the trench, making sure that they are butted tightly. Two stakes should be driven through each bale along the centerline of the ditch check, approximately 6" to 8" in from the bale ends. Stakes should be driven at least 12" into the ground.
Once all the bales have been installed and anchored, place the excavated soil against the upstream side of the check and compact it. The compacted soil should be no more than 3" to 4" deep and extend upstream no more than 24".

List of common placement/installation mistakes to avoid:

Do not place a bale ditch check directly in front of a culvert outlet. It will not stand up to the concentrated flow.
Do not place bale ditch checks in ditches that will likely experience high flows. They will not stand up to concentrated flow.
Follow prescribed ditch-check spacing guidelines. If spacing guidelines are exceeded, erosion will occur between the ditch checks.
Do not allow water to flow around the ditch check. Make sure that the ditch check is long enough so that the ground level at the ends of the check is higher than the top of the lowest center bale.
Do not place bale ditch checks in channels with shallow soils underlain by rock. If the check is not anchored sufficiently, it will wash out.
Bale ditch checks must be dug into the ground. Bales at ground level do not work because they allow water to flow under the check.

Inspection and Maintenance:

Bale ditch checks should be inspected every 7 days and within 24 hours of a rainfall of 1/2" or more. The following is a list of questions that should be addressed during each inspection:

Does water flow around the ditch check?
Does water flow under the ditch check?
Does water flow through spaces between abutting bales?
Are any bales and/or scour aprons (optional) dislodged?
Are bales decomposing due to age and/or water damage?
Does sediment need to be removed from behind the ditch check?

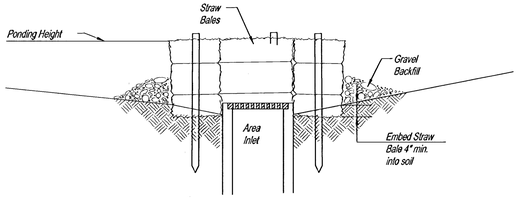

SECTION A-A

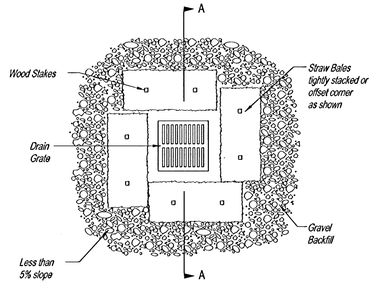

STRAW BALE BARRIERS FOR AREA INLETS

(INLET PROTECTION)

Material Specification:

Bale area inlet barriers should be constructed of wheat straw, oat straw, prairie hay, or bromegrass hay that is free of weeds declared noxious by the Kansas State Board of Agriculture.
The stakes used to anchor the bales should be a hardwood material with the following minimum dimensions: 2" square (nominal) by 4' long.

Placement:

Bale area inlet barriers should be placed directly around the perimeter of a drop inlet.
When a bale area inlet barrier is located near an inlet that has steep approach slopes, the storage capacity behind the barrier is drastically reduced. Timely removal of sediment must occur for a barrier to operate properly in this location.

Proper Installation Method:

Excavate a trench around the perimeter of the area inlet that is at least 4" deep by a bale's width wide.
Place the bales in the trench, making sure that they are butted tightly. Some bales may need to be shortened to fit into the trench around the area inlet. Two stakes should be driven through each bale, approximately 6" to 8" in from the bale ends.
Stakes should be driven at least 12" into the ground.
Once all the bales have been installed and anchored, place the excavated soil against the receiving side of the barrier and compact it. The compacted soil should be no more than 3" to 4" deep.
Note: When a bale area inlet barrier is placed in a shallow median ditch, make sure that the top of the barrier is not higher than the paved road. In this configuration, water may spread onto the roadway causing a hazardous condition.

List of common placement installation mistakes to avoid:

Bales should be placed directly against the perimeter of the area inlet. This allows overtopping water to flow directly into the inlet instead of onto nearby soil causing scour.
Bale area inlet barriers must be dug into the ground. Bales at ground level do not work because they allow water to flow under the barrier.

Inspection and Maintenance:

Bale area inlet barriers should be inspected every 7 days and within 24 hours of a rainfall 1/2" or more. The following is a list of questions that should be addressed during each inspection:

Does water flow under the area inlet barrier?
Does water flow through spaces between abutting bales?
Are any bales dislodged?
Are bales decomposing due to age and/or water damage?
Does sediment need to be removed from behind the area inlet barrier?

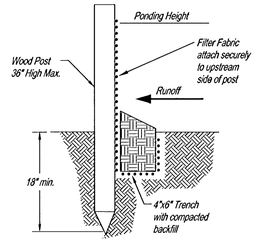

SILT FENCE BARRIERS

SILT FENCE BARRIERS

Material Specification:

Silt fence fabric should conform to the AASHTO M288 96 silt fence specification.
The posts used to support the silt fence fabric should be a hardwood material with the following minimum dimensions: 2" square (nominal) by 4' long.
Silt fence fabric should be attached to the wooden posts with staples, wire, zip ties, or nails.

Placement:

A slope barrier should be used at the toe of a slope when a ditch does not exist. The slope barrier should be placed on nearly level ground 5' to 10' away from the toe of a slope. The barrier is placed away from the toe of the slope to provide adequate storage for settling out sediment.
When practicable, silt fence slope barriers should be placed along contours to avoid a concentration of flow.
Silt fence slope barriers can also be placed along right-of-way fence lines to keep sediment from crossing onto adjacent property. When placed in this manner, the slope barrier will not likely follow contours.

Proper installation method:

Excavate a trench the length of the planned slope barrier that is 6" deep by 4" wide.
Make sure that the trench is excavated along a single contour. When practicable, slope barriers should be placed along contours to avoid a concentration of flow. Place the soil on the upslope side of the trench for later use.
Roll out a continuous length of silt fence fabric on the downslope side of the trench.
Place the edge of the fabric in the trench starting at the top upslope edge. Line all three sides of the trench with the fabric. Backfill over the fabric in the trench with the excavated soil and compact. After filling the trench, approximately 24" to 36" of silt-fence fabric should remain exposed.
Lay the exposed silt fence upslope of the trench to clear an area for driving in the posts.
Just downslope of the trench, drive posts into the ground to a depth of at least 18".
Place posts no more than 4' apart.
Attach the silt fence to the anchored post with staples, wire, zip ties, or nails.

List of common placement/installation mistakes to avoid:

When practicable, do not place silt fence slope barriers across contours. Slope barriers should be placed along contours to avoid a concentration of flow. When the flow concentrates, it overtops the barrier and the silt fence slope barrier quickly deteriorates.
Do not place silt-fence posts on the upslope side of the silt fence fabric. In this configuration, the force of the water is not restricted by the posts, but only by the staples (wire, zip ties, iiaits, etc.). The silt fence will rip and fail.
Do not place silt fence slope barriers in areas with shallow soils underlain by rock. If the barrier is not sufficiently anchored, it will wash out.
Silt fence slope barriers must be dug into the ground--silt fence at ground level does not work because water will flow underneath.

Inspection and Maintenance:

Silt fence slope barriers should be inspected every 7 days and within 24 hours of a rainfall of 1/2" or more. The following is a list of questions that should be addressed during each inspection:

Are there any points along the slope barrier where water is concentrating?
Does water flow under the slope barrier?
Do the silt fences sag excessively?
Has the silt fence torn or become detached from the posts?
Does sediment need to be removed from behind the slope barrier?

CITY OF WICHITA

SOIL EROSION BMP DETAILS

CHRISTOPHER M. CARRIER, P.E.
STORM WATER ENGINEER

PROJECT NUMBER	OCA NO.
468-83682	622083/744009

DATE: MAY 2001

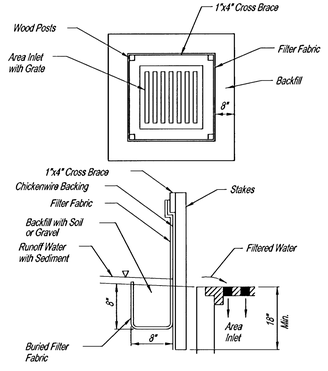

SILT FENCE BARRIERS FOR AREA INLETS

(INLET PROTECTION)

Material Specification:

Silt fence fabric should conform to the AASHTO M288 96 silt fence specification.
The wire or polymeric mesh backing used to help support the silt fence fabric should conform to the AASHTO M288 96 silt fence specification.
The posts used to support the silt fence fabric should be a hardwood material with the following minimum dimensions: 2" square (nominal) by 4' long.
The material used to frame the tops of the posts should be 1" by 4" boards.
Silt fence fabric and support backing should be attached to the wooden posts and frame with staples, wire, zip ties, or nails.

Placement:

Place a silt fence drop inlet barrier in a location where it is unlikely to be overtopped.
Water should flow through silt fence, not over it. Silt fence barriers for area inlets often fail when repeatedly overtopped.
When used as a barrierfor area inlets, silt fence fabric and posts must be supported at the top by a wooden frame.
When a silt fence barrier for area inlets is located near an inlet that has steep approach slopes, the storage capacity behind the barrier is drastically reduced. Timely removal of sediment must occur for a barrier to operate properly in this location.

Proper installation method:

Excavate a trench around the perimeter of the area inlet that is at least 8" deep by 8" wide.
Drive posts to a depth of at least 18" around the perimeter of the area inlet.
The distance between posts should be 4' or less. If the distance between two adjacent corner posts is more than 4', add another post(s) between them.
Connect the tops of all the posts with a wooden frame made of 1" by 4" boards. Use nails or screws for fastening.
Attach the wire or polymeric-mesh backing to the outside of the post/frame structure with staples, wire, zip ties, or nails.
Roll out a continuous length of silt fence fabric long enough to wrap around the perimeter of the area inlet. Add more length for overlapping the fabric joint. Place the edge of the fabric in the trench, starting at the outside edge of the trench. Line all three sides of the trench with the fabric. Backfill over the fabric in the trench with the excavated soil and compact. After filling the trench, approximately 24" to 36" of silt fence fabric should remain exposed.
Attach the silt fence to the outside of the post/frame structure with staples, wire, zip ties, or nails. The joint should be overlapped to the next post.

Note: When a silt fence barrier for area inlet is placed in a shallow median ditch, make sure that the top of the barrier is not higher than the paved road. In this configuration, water may spread onto the roadway causing a hazardous condition.

List of common placement/installation mistakes to avoid:

Water should flow through a silt fence barrier for area inlet-not over it. Place a silt fence barrier for area inlet in a location where it is unlikely to be overtopped. Silt fence barrier for area inlets often fail when repeatedly overtopped.
Do not place posts on the outside of the silt fence barrier for area inlet. In this configuration, the force of the water is not resisted by the posts, but only by the staples (wire, zip-ties, nails, etc.). The silt fence will rip and fail.
Do not install silt fence barrier for area inlets without framing the top of the posts.
The corner posts around area inlets are stressed in two directions whereas a normal silt fence is only stressed in one direction. This added stress requires more support.

Inspection and Maintenance:

Silt fence barrier for area inlets should be inspected every 7 days and within 24 hours of a rainfall of 1/2" or more. The following is a list of questions that should be addressed during each inspection:

Does water flow under the silt fence?
Does the silt fence sag excessively?
Has the silt fence torn or become detached from the posts?
Does sediment need to be removed from behind the area inlet barrier?

NOTE: Point A must be higher than Point B so that water flows over the bales and not around them.

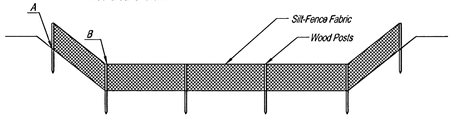

ELEVATION

SILT FENCE DITCH CHECKS

(STREAM PROTECTION)

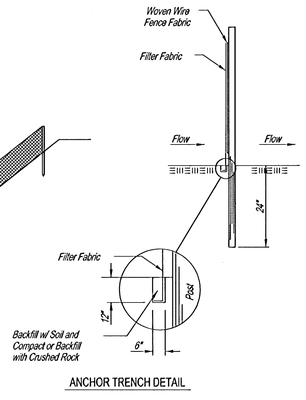

ANCHOR TRENCH DETAIL

Material Specification:

Silt fence fabric should conform to the AASHTO M288 96 silt fence specification.
The posts used to support the silt fence fabric should be a hardwood material with the following minimum dimensions: 2" square (nominal) by 4' long.
Silt fence fabric should be attached to the wooden posts with staples, wire, zip ties, or nails.

Placement:

Place silt fence in ditches where it is unlikely that it will be overtopped.
Water should flow through a silt fence ditch check, not over it. Silt fence ditch checks often fail when overtopped.
Silt fence ditch checks should be placed perpendicular to the flowline of the ditch.
The silt fence should extend for enough so that the ground level at the ends of the fence is higher than the top of the low point of the fence. This prevents water from flowing around the check.
Checks should not be placed in ditches where high flows are expected. Rock checks should be used instead.
Silt fence should be placed in ditches with slopes of 6% or less. For slopes steeper than 6%, rock checks should be used.

The following table provides check spacing for a given ditch grade:

Ditch grade (%)	Check Spacing (feet)
0.5	200
1.0	200
2.0	100
3.0	65
4.0	50
5.0	40
6.0	30

Proper installation method:

Excavate a trench perpendicular to the ditch flowline that is at least 12" deep by 6" wide.
Extend the trench in a straight line along the entire length of the proposed ditch check.
Place the soil on the upstream side of the trench for later use.
Roll out a continuous length of silt fence fabric on the downstream side of the trench.
Place the edge of the fabric in the trench starting at the top upstream edge of the trench.
Line two sides of the trench with the fabric as shown on detail. Backfill over the fabric in the trench with the excavated soil and compact. After filling the trench, approximately 24" to 36" of silt fence fabric should remain exposed.
Lay the exposed silt fence on the upstream side of the trench to clear an area for driving in the posts. Just downstream of the trench, drive posts into the ground to a depth of at least 24". Place posts no more than 4' apart.
Attach the silt fence to the anchored post with staples, wire, zip ties, or nails.

List of common placement/installation mistakes to avoid:

Water should flow through a silt fence ditch check-not over it. Place silt fence in ditches where it is unlikely that it will be overtopped. Silt fence installations quickly deteriorate when water overtops them.
Do not place silt fence posts on the upstream side of the silt fence fabric. In this configuration, the force of the water is not restricted by the posts, but only by the staples (wire, zip ties, nails, etc.). The silt fence will rip and fail.
Do not place a silt fence ditch check directly in front of a culvert outlet. It will not stand up to the concentrated flow.
Do not place silt fence ditch checks in ditches that will likely experience high flows. They will not stand up to concentrated flow.
Follow prescribed ditch check spacing guidelines. If spacing guidelines are exceeded, erosion will occur between the ditch checks.
Do not allow water to flow around the ditch check. Make sure that the ditch check is long enough so that the ground level at the ends of the fence is higher than the low point on the top of the fence.
Do not place silt fence ditch checks in channels with shallow soils underlain by rock. If the check is not anchored sufficiently, it will wash out.

Inspection and Maintenance:

Silt fence ditch checks should be inspected every 7 days and within 24 hours of a rainfall of 1/2" or more. The following is a list of questions that should be addressed during each inspection:

Does water flow around the ditch check?
Does water flow under the ditch check?
Does the silt fence sag excessively?
Has the silt fence torn or become detached from the posts?
Does sediment need to be removed from behind the ditch check?

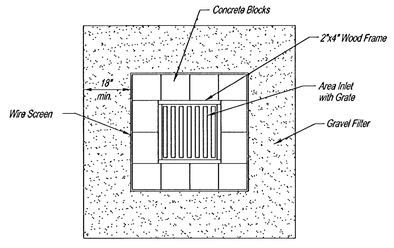

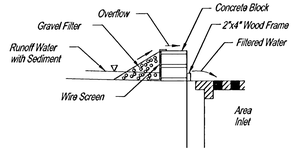

CONCRETE BLOCK FILTER FOR AREA DRAIN

(INLET PROTECTION)

Gravel barriers provide little filtering of large inflow waters. However, when installed correctly and maintained, they can effectively treat low runoff flows.

Placement of gravel filters around area drains must be completed in a manner that will not cause local flooding.

Gravel filters can be used if the immediate and adjacent area to the area drain consists of soil or pavement.

Only gravel filters are to be installed on top of the pavement.

Instructions for Installing:

STEP 1: Place concrete blocks around the grate. The blocks can be stacked one or two high and should be supported by a 2"x4" board.
STEP 2: Wrap 1/2" mesh wire screen around the concrete blocks.
STEP 3: Place 1" to 1-1/2" diameter rock around the blocks and wire screen. Be sure the rock extends down from the top of the concrete block.
STEP 4: To prevent damage to vehicles, signs warning drivers about the structures may be necessary.

An alternative method is use of gravel bags that are supported to prevent collapsing.

Use of rock having diameters smaller than 1" may result in clogging of pores and reduce the amount of water flowing into an inlet.

Maintenance:

All gravel filters installed around area drains should be inspected and repaired after each runoff event. Sediment should be removed when material is within 3" of the top of any block. Periodically, the gravel should be raked to increase infiltration and filtering of runoff waters. Accumulated sediment is to be removed immediately from roads and streets after every runoff event.

CITY OF WICHITA

SOIL EROSION BMP DETAILS

CHRISTOPHER M. CARRIER, P.E.
STORM WATER ENGINEER

PROJECT NUMBER	OCA NO.
468-83682	622083/744009

DATE: MAY 2001

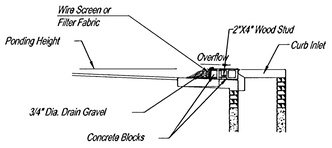

SECTION A-A

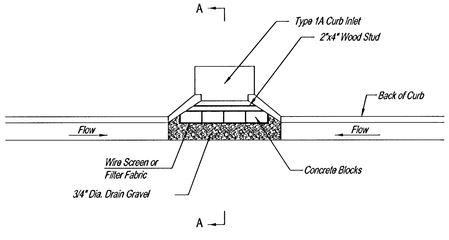

CURB INLET GRAVEL FILTERS

(INLET PROTECTION-RESIDENTIAL STREETS ONLY)

NOTE: Other types of curb inlet protection may be approved by the city so long as equal protection is provided.

A gravel inlet filter shall be installed at sump locations on residential streets. This type of protection is not to be used on arterial or collector streets at any time that it would pose an undue traffic hazard.

Instructions for Installing:

STEP 1: Place concrete blocks around the inlet as shown on drawing. Insert 2x4 board as shown.
STEP 2: Wrap 1/2" mesh wire screen around the concrete blocks.
STEP 3: Place 1" to 1-1/2" diameter rock around the blocks and wire screen. Be sure the rock extends down from the top of the concrete block.
STEP 4: To prevent damage to vehicles, signs warning drivers about the structures may be necessary. An alternative installation is the use of gravel bags supported by a 2"x4" board to prevent collapsing.

Use of rock with diameters smaller than 1" in the bag may result in clogging of pores and reduce the amount of water flowing into an inlet.

Maintenance:

All curb inlet gravel filters shall be inspected and repaired after each runoff event. Sediment deposits are to be removed once material is within 8 cm (3 inches) of the top of any block. Periodically, the gravel shall be raked to increase infiltration and filtering of runoff waters. Accumulated sediment is to be removed immediately from roads and streets.

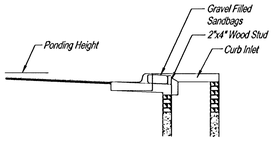

SECTION B-B

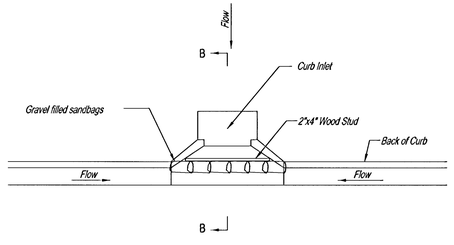

CURB INLET SANDBAG FILTERS

(INLET PROTECTION)

NOTE: Other types of curb inlet protection may be approved by the City so long as equal protection is provided.

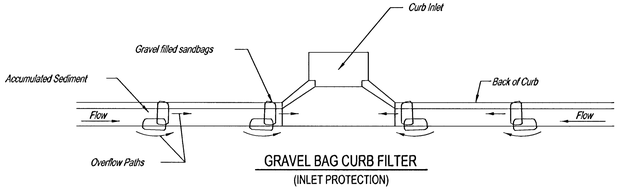

GRAVEL BAG CURB FILTER

(INLET PROTECTION)

NOTE: Place two or more sets of bags in a manner that results in maximum support. The flow line bag must be lower than top of curb.

CURB SEDIMENT TRAPS

When inlets are located on streets having a grade (i.e., sump conditions do not exist), installing gravel (or sand) bags in the gutter flow line to create small sediment traps can be considered. Gravel bags are recommended over sand bags to allow for drainage.

If the spacing between bags becomes too large, little sediment may be trapped. Spacing of bags should be completed using the table or graph that illustrates placement distances based upon street slope. When installed in the gutter, bag tops must be lower than the sidewalk.

Spacing:

Gravel bags are to be placed according to street grades using the following table or graph that appears below.

GRADE (%)	SPACING (FEET)
0.5	75
1.0	45
2.0	18
3.0	12
4.0	9
5.0	6

Maintenance:

Collected sediment shall be removed after every runoff event. Bags that are destroyed by vehicular traffic or through natural deterioration are to be immediately replaced.

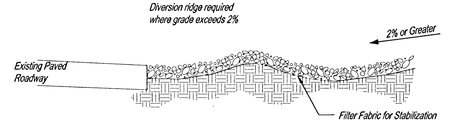

SECTION C-C

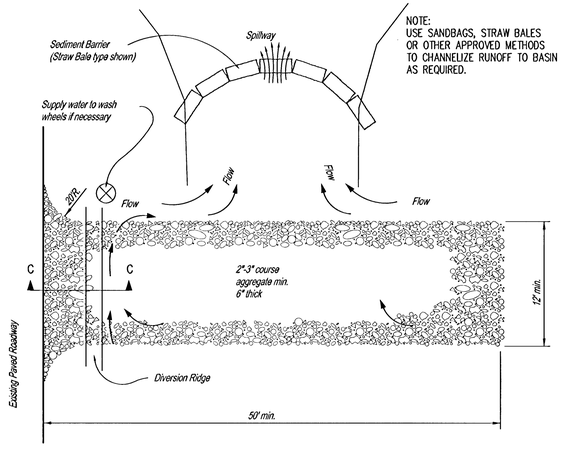

STABILIZED CONSTRUCTION ENTRANCE

NOTES:

1. THE ENTRANCE SHALL BE MAINTAINED IN A CONDITION THAT WILL PREVENT TRACKING OR FLOWING OF SEDIMENT ONTO PUBLIC RIGHTS-OF-WAY. THIS MAY REQUIRE TOP DRESSING, REPAIR AND/OR CLEANOUT OF ANY MEASURES USED TO TRAP SEDIMENT.
2. WHEN NECESSARY, WHEELS SHALL BE CLEANED PRIOR TO ENTRANCE ONTO PUBLIC RIGHT-OF-WAY.
3. WHEN WASHING IS REQUIRED, IT SHALL BE DONE ON AN AREA STABLIZED WITH CRUSHED STONE THAT DRAINS INTO AN APPROVED SEDIMENT TRAP OR SEDIMENT BASIN, AS SHOWN ABOVE.
4. DRIVE ENTRANCES ONTO RESIDENTIAL LOTS WILL NOT BE REQUIRED TO HAVE THE SEDIMENT BARRIER SHOWN, BUT WHEEL WASHING MAY BE REQUIRED IF STABILIZED ENTRANCE IS NOT SUFFICIENT TO KEEP MUD FROM BEING TRACKED ONTO ADJACENT STREET. ENTRANCE SHALL EXTEND FROM BACK OF CURB TO DWELLING.

CITY OF WICHITA

SOIL EROSION BMP DETAILS

CHRISTOPHER M. CARRIER, P.E.
STORM WATER ENGINEER

PROJECT NUMBER 468-83682
OCA NO. 622083/744009
DATE MAY 2001

SEWER APPURTENANCES DETAILS

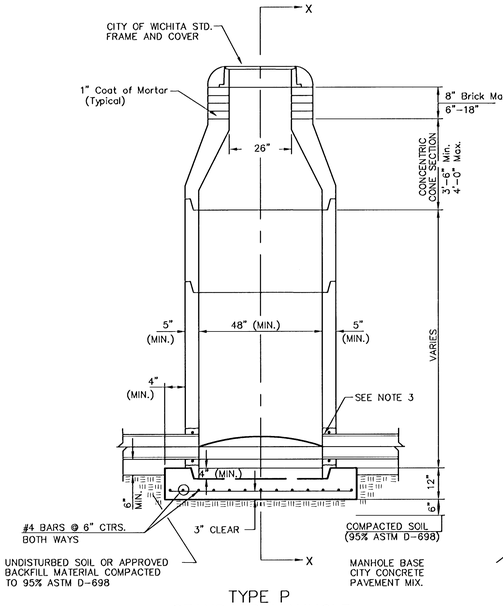

TYPE P
STANDARD MANHOLE

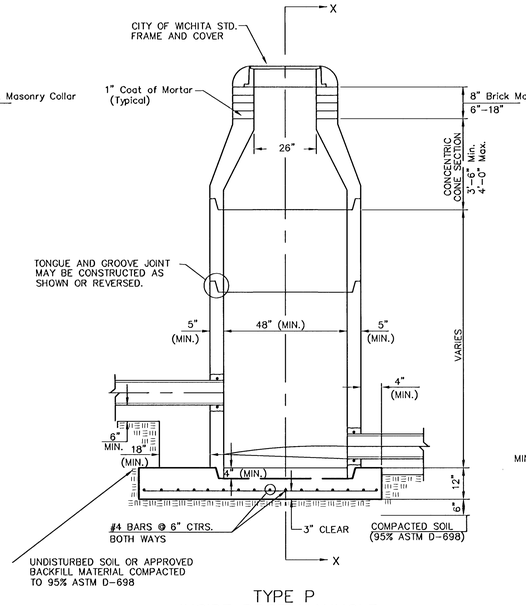

TYPE P
INSIDE DROP MANHOLE

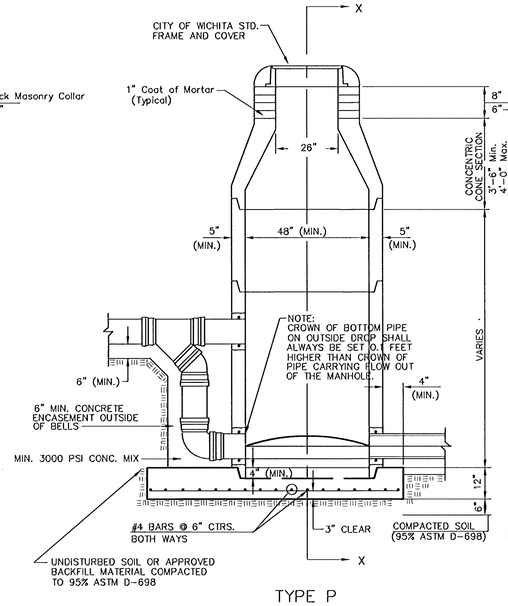

TYPE P
OUTSIDE DROP MANHOLE

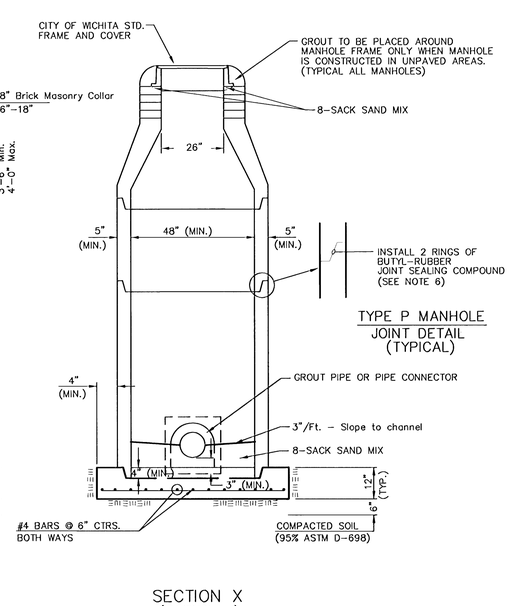

SECTION X
(TYPICAL)

GENERAL NOTES

PRECAST MANHOLE NOTES

1. ALL PRECAST CONCRETE MANHOLE SECTIONS SHALL CONFORM TO THE LATEST REVISIONS OF A.S.T.M. C478 AS MODIFIED BY THE SPECIFICATIONS.
2. NON-SHRINK GROUT SHALL BE NON-METALLIC TYPE.
3. APPROVED FLEXIBLE WATERSTOP GASKETS SHALL BE INSTALLED TO JOIN THE SEWER TO THE MANHOLE WALL WHEN A.B.S. COMPOSITE PIPE OR P.V.C. PIPE IS USED. FOR OTHER TYPES OF PIPE THE SEWER SHALL BE GROUTED IN PLACE WITH NON-SHRINK GROUT. THE SEWER PIPE SHALL BE SUPPORTED WITH CONCRETE ENCASEMENT A MINIMUM OF 3 FEET FROM THE MANHOLE WALL AND TO THE FIRST JOINT FOR V.C.P. SUCH THAT THE JOINT REMAINS FLEXIBLE.
4. ALL INSIDE SURFACES OF THE CONCRETE MANHOLE WHICH WOULD BE EXPOSED TO SEWER GAS SHALL BE COATED WITH 2 COATS TNEMEC SERIES 66 HI-BUILD EPOXOLINE, DRY THICKNESS OF 8 MILS (MIN.)
5. EXTERIOR MANHOLE WALLS SHALL BE COATED WITH 1 COAT MOBILARMA 633 BITUMINOUS COATING.
6. JOINT SEALING COMPOUND SHALL BE KENT SEAL NO. 2 OR APPROVED EQUAL.
7. PRECAST MANHOLES SHALL BE SET AT LEAST 4 INCHES INTO THE MANHOLE BASE.
8. TOP OF MANHOLE FLOOR SLAB SHALL BE AT LEAST 3 INCHES BELOW THE FLOW LINE OF THE OUTLET PIPE TO INSURE SUFFICIENT MINIMUM THICKNESS OF SHAPED INVERT.
9. LIFTING HOLES SHALL BE FILLED WITH NON-SHRINK GROUT AND THE INTERIOR SURFACE COATED AS SPECIFIED.
10. MORTAR USED IN MASONRY CONSTRUCTION SHALL CONTAIN 8 SACKS OF CEMENT PER CUBIC YARD. CONCRETE USED IN MANHOLE BASES SHALL CONFORM TO THE REQUIREMENTS OF CONCRETE FOR CONCRETE PAVEMENT CONSTRUCTION AS SPECIFIED IN THE CITY STANDARD PAVING SPECIFICATIONS USING CITY CONCRETE PAVEMENT MIX WITHOUT AIR ENTRAINING ADMIXTURE. MORTAR SHALL BE PLACED AROUND THE MANHOLE RING AS SHOWN ON THE DRAWINGS WHEN MANHOLES ARE CONSTRUCTED IN UNPAVED AREAS. MANHOLES CONSTRUCTED WHERE PIPE SIZES ARE SMALLER THAN 24" SHALL HAVE AN INSIDE DIAMETER OF 4'. MANHOLES CONSTRUCTED WHERE PIPE SIZES ARE 24" OR LARGER SHALL HAVE AN INSIDE DIAMETER OF 5'. COMPLETED MANHOLE SHALL BE WITHOUT LEAKS AND WATER TIGHT.
11. REINFORCING STEEL SHALL BE INSTALLED IN THE MANHOLE BASES AND SHALL CONSIST OF NO. 4 BARS PLACED ON 6" CENTERS IN BOTH DIRECTIONS. THE MANHOLE BASE REINFORCEMENT SHALL BE PLACED AT LEAST 3" ABOVE THE BOTTOM OF THE MANHOLE BASE. ALL COSTS FOR FURNISHING AND INSTALLING REINFORCING STEEL SHALL BE INCLUDED IN THE UNIT PRICE BID FOR THE MANHOLE.
12. OPENINGS SHALL BE CUT INTO THE MANHOLE WALL WHEN OUTSIDE DROPS ARE CONSTRUCTED ON EXISTING MANHOLES. SUCH OPENINGS CUT INTO EXISTING MANHOLES SHALL BE AS SMALL AS PRACTICAL TO FACILITATE INSTALLING AND GROUTING THE NEW PIPE IN PLACE. WATERSTOP GASKETS SHALL BE USED WITH P.V.C. AND A.B.S. COMPOSITE PIPE. THE NEW PIPE SHALL BE GROUTED INTO THE OPENING USING AN APPROVED NONSHRINK GROUT FOR THE FULL MANHOLE WALL THICKNESS. THE EXTERIOR OF THE COMPLETED CONNECTION SHALL BE SEALED WITH AN APPROVED BITUMINOUS COATING SUCH THAT THE CONNECTION WILL BE WATER TIGHT. FLOOR OF MANHOLE SHALL BE MODIFIED TO FORM NEW FLOW CHANNEL FOR THE NEW CONNECTION AS INDICATED BY THE DRAWING. THIS WORK, INCLUDING MODIFICATION OF MANHOLE FLOOR, SHALL BE PAID FOR AT THE UNIT PRICE BID FOR OUTSIDE DROP STACK CONSTRUCTED ON EXISTING MANHOLE.
13. THE FLOORS OF ALL MANHOLES SHALL BE SHAPED WITH FLOW CHANNELS SUCH THAT THE MANHOLES WILL BE SELF CLEANING AND FREE OF AREAS WHERE SOLIDS COULD BE DEPOSITED AS SEWAGE FLOWS THROUGH THE MANHOLE FROM ALL INLET PIPES TO THE OUTLET PIPE. FLOW CHANNELS SHALL BE FORMED TO MATCH THE BOTTOM HALVES OF THE INFLOWING PIPES AND THE OUTFLOWING PIPE AS SHOWN BY THE DRAWINGS EXCEPT FOR INSIDE DROP MANHOLES. FLOW CHANNELS FOR INSIDE DROP MANHOLES SHALL BE CONSTRUCTED AS INDICATED BY THE DRAWING. MANHOLE FLOORS SHALL HAVE SLOPES OF 3 INCHES PER FOOT IN THE AREAS OUTSIDE OF THE FLOW CHANNELS SLOPED TOWARD THE FLOW CHANNELS. PIPES LAID THROUGH MANHOLES SHALL HAVE THE TOP HALF REMOVED TO NEAT LINES FOR THE FULL INSIDE DIAMETER OF THE MANHOLE. MANHOLE FLOORS SHALL THEN BE SHAPED AROUND THE BOTTOM HALF OF THE PIPE WHICH FORMS THE FLOW CHANNEL.
14. PIPES INSTALLED WITHIN THE EXCAVATION MADE FOR THE MANHOLE SHALL BE CRADLED WITH CONCRETE TO THE LIMITS OF THE MANHOLE EXCAVATION. WHEN CLAY PIPE IS USED, THE CRADLE SHALL EXTEND TO THE FIRST JOINT OUTSIDE THE MAHOLE. THE CRADLE SHALL BE TERMINATED AT THE CLAY PIPE JOINT IN A MANNER WHICH WILL MAINTAIN THE FLEXIBILITY OF THE JOINT. COST OF CRADLE WITHIN MANHOLE EXCAVATION OR TO CLAY PIPE JOINTS ADJACENT TO MANHOLE SHALL BE INCLUDED IN THE UNIT PRICE BID FOR THE MANHOLE.
15. MANHOLE COVER CASTINGS AND MANHOLE FRAME CASTINGS SHALL CONFORM TO THE REQUIREMENTS AS INDICATED IN THE STANDARD SPECIFICATIONS AND AS SHOWN IN THE STANDARD DETAIL DRAWING.
16. THE VERTICAL DROP IN INSIDE DROP MANHOLES SHALL NOT EXCEED 2' FOR INFLOWING PIPES SIZED 12" OR SMALLER AND 2' FOR INFLOWING PIPES LARGER THAN 12". THE CROWNS OF INFLOWING PIPES SHALL NEVER BE SET LOWER THAN THE CROWN OF THE OUTFLOWING PIPE.
17. STANDARD MANHOLES AND STANDARD INSIDE DROP MANHOLES SHALL BE BID AS STANDARD MANHOLES FOR THE TYPE AND DIAMETER INDICATED. OUTSIDE DROP MANHOLES SHALL BE BID AS STANDARD OUTSIDE DROP MANHOLES FOR THE TYPE AND DIAMETER INDICATED. ALL MANHOLE DIAMETERS WILL BE 4' UNLESS INDICATED OTHERWISE.
18. A BRICK MASONRY COLLAR SHALL BE INSTALLED BETWEEN THE CAST IRON FRAME AND THE CONCENTRIC CONE. THE COLLAR WILL HAVE 8" WALLS AND A VERTICAL HEIGHT OF 6" MINIMUM AND 18" MAXIMUM. A 1" COAT OF MORTAR WILL BE PLASTERED ON THE OUTSIDE OF THE COLLAR. THE USE OF PRE-CAST CONCRETE SPACERS FOR MANHOLE TOP ADJUSTMENT IS ALSO ALLOWED.

THE CITY OF WICHITA
CITY ENGINEER'S OFFICE
CITY HALL – SEVENTH FLOOR
455 NORTH MAIN STREET
WICHITA, KANSAS 67202
(316) 268-4501
(316) 268-4174 FAX

STANDARD TYPE 'P' MANHOLES

NORTH AREA SEWER

PROJECT NUMBER	OCA #
468-83682	622083/744009
DATE MAR 98	SHEET 40 OF 44

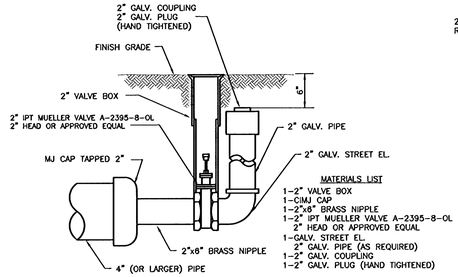

2" BLOWOFF ASSEMBLY

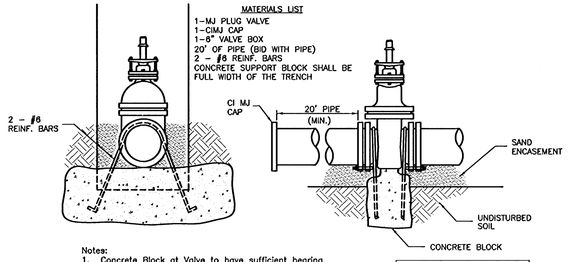

Notes:
1. Concrete Block at Valve to have sufficient bearing in undisturbed soil to prevent thrust movement as shown in table at right. Field Engineer to determine thrust loading of undisturbed soil and final size of thrust block.

2. The thrust block shall be constructed such that bolts, nuts, and other MJ accessories are kept clear of concrete.

3. All valves at dead ends and at other locations as called out on the plans shall be blocked as shown here.

THRUST AT VALVES	
VALVE	THRUST AT 150 #/in²
4"	1809 lbs.
6"	4245 lbs.
8"	7540 lbs.
12"	16965 lbs.

ANCHORED VALVE ASSEMBLY

MATERIALS LIST
1-MJ PLUG VALVE
1-8" VALVE BOX
2-COUPLINGS
2-SHORT PCS.
(DICL SJ PIPE)
CONCRETE SUPPORT BLOCK SHALL BE
FULL WIDTH OF THE TRENCH

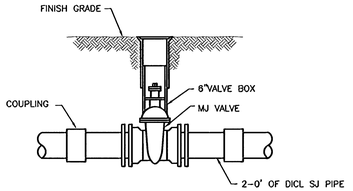

LINE VALVE ASSEMBLY

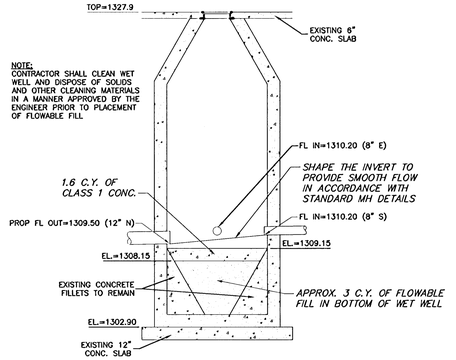

EXIST. WET WELL CONVERSION DETAIL

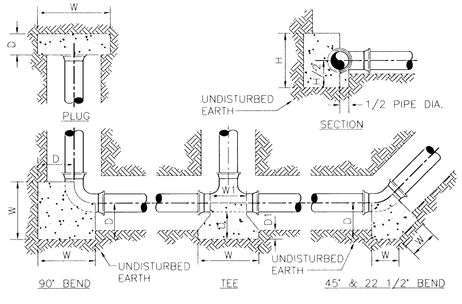

CONCRETE THRUST BLOCK DIMENSIONS IN INCHES																		
PIPE DIA.	TEES					PLUGS			90° BENDS			45° BENDS			22 1/2° BENDS		
	W	W1	D	D1	H	W	D	H	W	D	H	W	D	H	W	D	H
4"	12	12	9	-	21	12	9	22	18	9	12	9	12	12	6	12	12
6"	22	15	15	6	28	22	12	28	22	15	18	9	12	22	7	12	18
8"	32	18	20	6	30	32	18	30	30	20	24	12	18	34	9	18	22
10"	38	20	21	6	40	38	22	40	33	22	32	18	24	36	12	24	28
12"	46	28	30	6	48	46	22	48	40	28	40	20	30	46	12	24	28
14"	50	26	30	6	52	50	24	50	46	32	42	22	36	48	14	32	38
16"	52	30	32	6	54	54	24	54	50	36	42	24	40	48	15	34	42
18"	60	60	32	6	60	60	24	60	54	38	48	27	44	54	17	37	46

NOTE:
ALL HORIZONTAL BENDS TO BE THRUST BLOCK U.N.O..

THRUST BLOCK SIZING SCHEDULE

N.T.S.

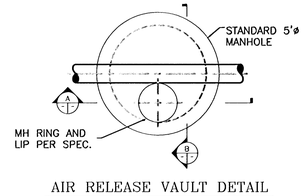

AIR RELEASE VAULT DETAIL

SCALE: NONE

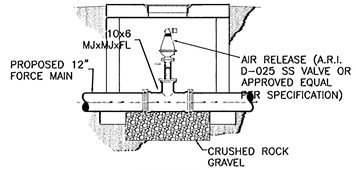

A SECTION

SCALE: NONE

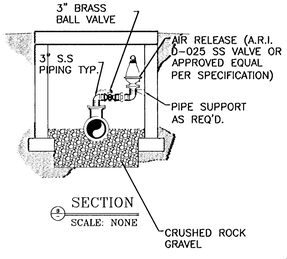

A SECTION

SCALE: NONE

THE CONTRACTOR SHALL REPLACE FOUR (4) EXISTING AIR RELEASE VALVES ON THE EXISTING 10" FORCE MAIN FROM MERIDIAN TO SOUTH END OF EXISTING FORCE MAIN WITH A.R.I. STAINLESS STEEL D-025 VALVES OR APPROVED EQUAL PER SPECIFICATION 17939. CONTACT THE CITY OF WICHITA SEWAGE TREATMENT DIVISION FOR DIRECTION ON VALVE LOCATIONS FOR REPLACEMENT. THE FOUR AIR RELEASES TO BE REPLACED ARE 143AR, 144AR, 145AR, AND 172AR.



NORTH AREA INTERCEPTOR SANITARY SEWER DETAIL SHEET

Ruggles & Bohm, P.A.
Engineering, Surveying, Land Planning
924 North Main
Wichita, Kansas 67203
www.rbkansas.com
(316) 264-8008
(316) 264-4621 fax
E-mail: info@rbkansas.com

DESIGN	
DRAWN	PDC
CHECK	PDC
REVIEW	8/3/05
UTILITY	
DRAWING FILE	ENG BASE/ KEY MAP
PROJECT NUMBER	468-83682
DATE	8/28/05
W.O./JOB	2627X
SHEET	41
OF	44

COUNTY	STATE	PROJECT NUMBER	FISCAL YEAR	SHEET NO.	TOTAL SHEETS
SEDGWICK	KANSAS	468-83682	2006	42	44

LIST OF TRAFFIC CONTROL DEVICES *

MUTCD DEVICE NO.	NO.	FLASHERS TYPE A	FLASHERS TYPE B	REMARKS
W21-4	2			
G20-2	2			

* FOR INFORMATION ONLY

DELINEATORS & CHANNELIZATION DEVICES

DEVICE	NO.	SIZE	FLASHERS TYPE A	FLASHERS TYPE B	FLASHERS TYPE C
BARRICADES					
TYPE III					
TYPE II					
TYPE I					
DRUMS					
CONES					
TUBES					
VERTICAL PANELS					
SINGLE					
BACK TO BACK					
PAVEMENT MARKING	WHITE	YELLOW			
4" BROKEN (Lin. Ft.)					
4" SOLID (Lin. Ft.)					
TEMPORARY STRIPING (Line Mile)					

SEE SHEET NO. ___ FOR TRAFFIC CONTROL NOTES

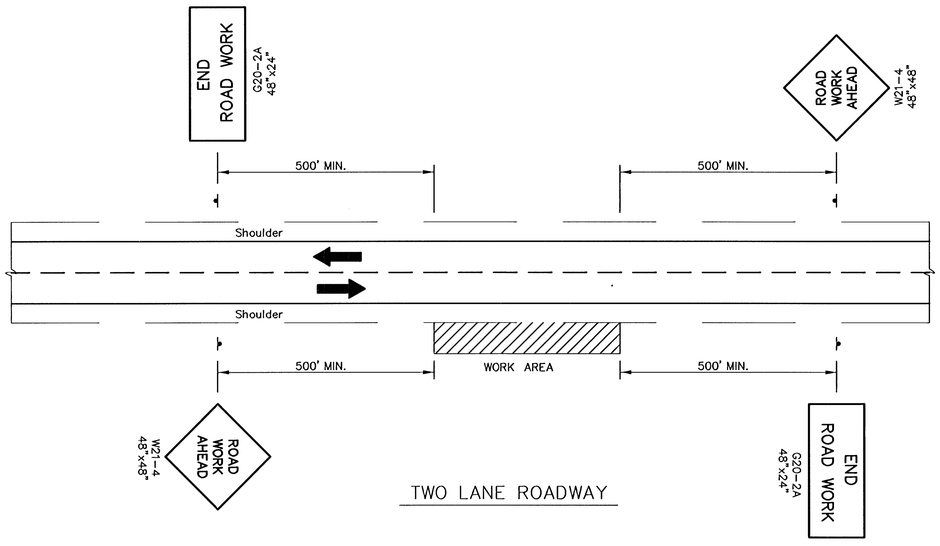

TWO LANE ROADWAY

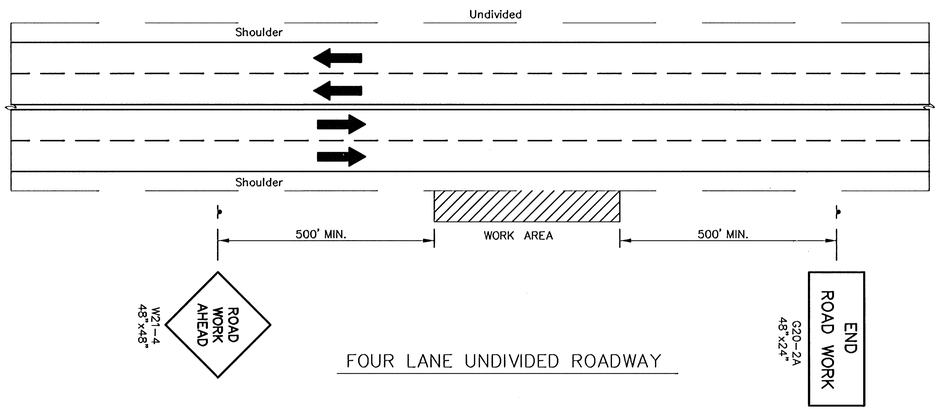

FOUR LANE UNDIVIDED ROADWAY

Date	Description	By /Chk
8/98	SI Conversion	DRS/MRB
12/94	Chg G20-2 to G20-2A & W21-4 to ROAD WORK	DRS/MRB

TRAFFIC CONTROL PLAN
FOR CONSTRUCTION WORK AT OFF SHOULDER LOCATIONS
TWO AND FOUR LANE ROADWAY T.C. NO. 5.0

PREPARED BY
SEDGWICK COUNTY PUBLIC WORKS
HIGHWAY DEPARTMENT
DAVID C. SPEARS, P.E. DIRECTOR/COUNTY ENGINEER

REVISED	SCALE	DESIGNED	DRAWN	CHECKED	SHEET NO.
	NONE	M.R.B.	D.R.S.	M.R.B.	42
	DATE	5/86	4/94	4/94	
	DWG NAME: Q:\Blocks\Std\tc5.dwg				

TRAFFIC CONTROL PLAN
FOR CONSTRUCTION WORK AT OFF SHOULDER LOCATIONS

COUNTY	STATE	PROJECT NUMBER	FISCAL YEAR	SHEET NO.	TOTAL SHEETS
SEDGWICK	KANSAS	468-83682	2006	43	44

LIST OF TRAFFIC CONTROL DEVICES *

MUTCD DEVICE NO.	NO.	FLASHERS TYPE A	FLASHERS TYPE B	REMARKS
G20-1	2			
G20-2A	1			
W4-2	2			
W20-1	2			
W20-5	2			
R2-1	2			
R2-5C	2			
R4-1	2			

* FOR INFORMATION ONLY

DELINEATORS & CHANNELIZATION DEVICES

DEVICE	NO.	SIZE	FLASHERS TYPE A	FLASHERS TYPE B	FLASHERS TYPE C
BARRICADES					
TYPE III					
TYPE II					
TYPE I					
DRUMS					
CONES					
TUBES					
VERTICAL PANELS					
SINGLE					
BACK TO BACK					
PAVEMENT MARKING	WHITE	YELLOW			
4" BROKEN (Lin. Ft.)					
4" SOLID (Lin. Ft.)					
TEMPORARY STRIPING (Line Mile)					
ARROW PANEL					

SEE SHEET NO. ___ FOR TRAFFIC CONTROL NOTES

Distance To Be Determined By The ENGINEER.

Channelization devices.

Advance Warning Flashing Or Sequencing Arrow Panel

TAPER FORMULA'S

L = S x W FOR SPEEDS OF 45 M.P.H. OR MORE

$L = \frac{WS^{[2]}}{60}$ FOR SPEEDS OF 40 M.P.H. OR LESS

WHERE: L = MINIMUM LENGTH OF TAPER
S = NUMERICAL VALUE OF POSTED SPEED PRIOR TO WORK
W = WIDTH OF OFFSET

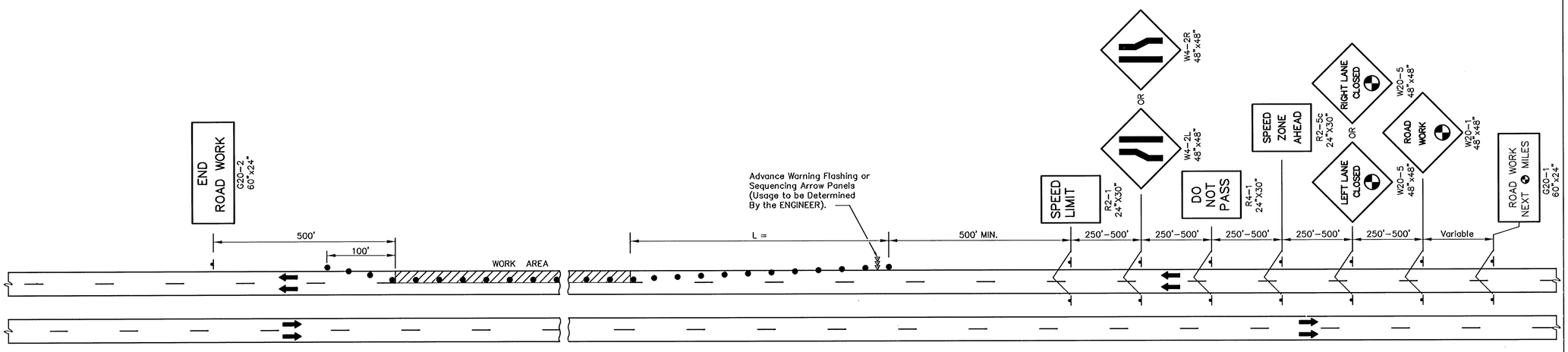

TRAFFIC CONTROL PLAN
FOR HANDLING TRAFFIC THROUGH CONSTRUCTION
ON A FOUR-LANE DIVIDED ROADWAY
ONE LANE CLOSED

12/94	Chg. G20-1,W20-1,G20-2 to "Road Work"	DRS/MRB

TRAFFIC CONTROL PLAN
FOR ONE LANE CLOSED ON A FOUR-LANE DIVIDED ROADWAY

T.C. NO. 14.0

PREPARED BY
SEDGWICK COUNTY PUBLIC WORKS
HIGHWAY DEPARTMENT

DAVID C. SPEARS, P.E. DIRECTOR/COUNTY ENGINEER

REVISED	SCALE	DESIGNED	DRAWN	CHECKED	SHEET NO.
	NONE	M.R.B.	D.R.S.	M.R.B.	43
	DATE	4/89	4/94	4/94	
	DWG NAME: Q:\Blocks\Std\Tc-14-0.dwg				

COUNTY	STATE	PROJECT NUMBER	FISCAL YEAR	SHEET NO.	TOTAL SHEETS
SEDGWICK	KANSAS	468-83682	2006	44	44

TRAFFIC CONTROL NOTES

1. ALL TRAFFIC CONTROL DEVICES AND INSTALLATION OR USE THEREOF SHALL COMPLY TO THE MANUAL ON UNIFORM TRAFFIC CONTROL DEVICES FOR STREETS AND HIGHWAYS (LATEST EDITION).

2. WHEN NO WORK IS IN PROGRESS NOR IS ANY EXPECTED TO BE FOR AN EXTENDED PERIOD OF TIME OR THERE ARE NO EXISTING HAZARDS AND THE ROADWAY IS UNRESTRICTED TO THE TRAVELING PUBLIC, TRAFFIC CONTROL SIGNS SHALL BE REMOVED OR COMPLETELY COVERED WITH ADEQUATE OPAQUE WATERPROOF MATERIAL.

3. ALL SIGNS SHALL BE POST MOUNTED IF TIME IN PLACE EXCEEDS FOUR (4) DAYS. EXCEPTIONS MAY BE MADE, PARTICULARLY IN URBAN AREAS WHERE POST MOUNTED SIGNS ARE PROHIBITIVE. POSTS SHALL BE 4"x4" WOOD OR OTHER BREAK AWAY MATERIAL AS APPROVED BY THE ENGINEER. SIGNS WITH A MINIMUM AREA OF 16 SQUARE FEET SHALL BE MOUNTED ON TWO POSTS.

4. PORTABLE SUPPORT INSTALLATION, USED FOR MOUNTING SIGNS OR DEVICES FOR TEMPORARY CONDITIONS, SHALL BE CONSTRUCTED TO YIELD UPON IMPACT TO MINIMIZE HAZARDS TO THE MOTORIST.

5. ALL PERMANENT SPEED LIMIT SIGNS THAT CONFLICT WITH THE POSTED PROJECT SPEED LIMIT SHALL BE COVERED THROUGHOUT THE CONSTRUCTION PERIOD.

6. WHENEVER PRACTICAL, ALL CONSTRUCTION EQUIPMENT, MATERIALS, AND DEBRIS SHALL BE STORED NO CLOSER THAN THIRTY (30) FEET FROM THE TRAVELED WAY. THE CONTRACTOR SHALL PLACE APPROPRIATE SIGNS AND/OR BARRICADES, AS DESIGNATED BY THE ENGINEER, AROUND ANY HAZARDOUS CONDITION CREATED BY THE CONTRACTOR WITHIN THIRTY (30) FEET OF THE TRAVELED WAY. ALL TRAFFIC CONTROL DEVICES NEEDED FOR THIS CONDITION SHALL BE CONSIDERED SUBSIDIARY TO THE BID ITEM "TRAFFIC CONTROL".

7. ADJUSTMENT OF LONGITUDINAL DIMENSIONS FOR SIGN SPACING MAY BE REQUIRED BY THE ENGINEER TO ENSURE THAT EFFECTIVE AND SAFE CONDITIONS EXIST UNDER ACTUAL FIELD CONDITIONS. SIGN SPACING SHOULD BE AS UNIFORM AS POSSIBLE.

8. TYPE "B" HIGH INTENSITY YELLOW FLASHING WARNING LIGHTS MAY BE REQUIRED ON ANY SIGN OR TYPE III BARRICADES WHEN DEEMED NECESSARY BY THE ENGINEER.

9. ENDS OF BRIDGES EXPOSED TO TRAFFIC DURING CONSTRUCTION THAT ARE NOT MARKED BY PERMANENT OBJECT MARKERS SHALL BE DELINEATED WITH ORANGE AND WHITE VERTICAL PANELS.

10. BARRICADES ARE TO BE SET AT LOCATIONS SHOWN ON THE TRAFFIC CONTROL PLAN SHEETS OR AS DIRECTED BY THE ENGINEER. SUFFICIENT BARRICADES SHALL BE ERECTED TO ADEQUATELY COVER THE ROADWAY OR LANE WIDTH. THE BARRICADES MAY BE MOUNTED ON APPROVED SKIDS ANCHORED BY WIRE OR SANDBAGS.

11. END CONSTRUCTION (ROAD WORK) SIGNS SHOULD BE PLACED FIVE HUNDRED (500) FEET FROM THE END OF THE ACTUAL WORK AREA AND NOT NECESSARILY AT THE EXTREME LIMITS OF THE PROJECT.

12. THE CONTRACTOR IS RESPONSIBLE FOR MAINTAINING ALL SIGNS AND DEVICES IN THEIR PROPER POSITION, CLEANING AND/OR REPLACING ANY DAMAGED OR ILLEGIBLE SIGN OR DEVICE AS DIRECTED BY THE ENGINEER WITHOUT UNDUE DELAY TO ENSURE EFFECTIVE AND SAFE TRAFFIC CONTROL.

    THE CONTRACTOR SHALL DESIGNATE AN EMPLOYEE, AND AN ALTERNATE, WHO WILL HAVE THE RESPONSIBILITY FOR SIGNING AND TRAFFIC CONTROL AS NOTED ON THE TRAFFIC CONTROL PLAN AND SHALL BE AVAILABLE 24 HOURS A DAY, 7 DAYS A WEEK, TO PERFORM THE ABOVE MAINTENANCE. THE ENGINEER WILL BE ADVISED OF THE NAME AND TELEPHONE NUMBER OF THE PERSON AND ALTERNATE GIVEN THIS RESPONSIBILITY. THE ENGINEER SHALL CONDUCT PERIODIC FIELD INSPECTIONS TO SEE THAT THE DEVICES ARE IN PLACE AND IN SATISFACTORY CONDITION.

13. CHANNELIZATION DEVICES: DEVICES AS USED HEREIN INCLUDE BUT IS NOT LIMITED TO BARRICADES, BARRIERS, CONES, DRUMS AND VERTICAL PANELS.

    (A). THE MAXIMUM SPACING BETWEEN CHANNELIZATION DEVICES IN THE TAPER SHOULD BE APPROXIMATELY EQUAL TO THE EXISTING SPEED LIMIT PRIOR TO ANY WORK.

    (B). THE SPACING BETWEEN DEVICES IN THE WORK ZONE SHOULD BE APPROXIMATELY 50 TO 100 FEET.

    (C). DEVICES PLACED ALONG PAVEMENT EDGE OR SHOULDER DROP-OFFS OF LESS THAN FOUR (4) INCHES SHALL BE PLACED A MAXIMUM OF FOUR HUNDRED (400) FEET APART AS DIRECTED BY THE ENGINEER.

    (D). DEVICES PLACED ALONG PAVEMENT EDGE OR SHOULDER DROP-OFFS OF MORE THAN FOUR (4) INCHES SHALL BE PLACED A MAXIMUM OF TWO HUNDRED (200) FEET APART AS DIRECTED BY THE ENGINEER.

    (E). DUE TO EXISTING CONDITIONS THE ENGINEER MAY REQUIRE A DECREASE IN THE SPACING STIPULATED ABOVE.

    (F). TYPE I OR II BARRICADES SHOULD BE PLACED AT APPROXIMATELY RIGHT ANGLES TO THE CENTER OF THE ROADWAY.

    (G). DRUMS SHALL BE REFLECTORIZED FULL CIRCUMFERENCE AND MAY BE SUBSTITUTED FOR TYPE I OR II BARRICADES OR TRAFFIC CONES.

    (H). FOR NIGHTTIME USE ALL DEVICES USED FOR CHANNELIZING TRAFFIC SHALL BE FULLY REFLECTORIZED AND, AS DIRECTED BY THE ENGINEER, DISPLAY THE APPROPRIATE WARNING LIGHT ON TOP OF THE DEVICE NEAREST THE TRAVELED WAY CENTERLINE.

    (I). TRAFFIC CONES SHOULD BE UTILIZED AS CHANNELIZING DEVICES FOR DAYTIME TRAFFIC CONTROL OPERATIONS. IN AREAS DEEMED HAZARDOUS BY THE ENGINEER, SUCH AS OPEN TRENCHES, THEY SHOULD BE SUPPLEMENTED BY OTHER TRAFFIC CONTROL DEVICES AS DIRECTED BY THE ENGINEER. TRAFFIC CONES WILL NOT BE USED FOR NIGHTTIME OPERATIONS.

14. THE LUMP SUM PRICE BID FOR THE BID ITEM "TRAFFIC CONTROL" SHALL BE FULL COMPENSATION FOR PROVIDING, INSTALLING, MOVING, REPLACING, MAINTAINING, REMOVING AND CLEANING ALL TRAFFIC CONTROL DEVICES AS REQUIRED OR AS DIRECTED BY THE ENGINEER; TO INCLUDE THE ADDITION OF ANY DEVICES DEEMED NECESSARY BY THE ENGINEER WHETHER SPECIFICALLY MENTIONED OR NOT.

15. AT ALL TIMES AND DURING ALL WEATHER CONDITIONS, ACCESS SHALL BE MAINTAINED FOR LOCAL TRAFFIC TO THE SATISFACTION OF THE ENGINEER. THIS MAINTENANCE, INCLUDING TEMPORARY SURFACING MATERIAL, IF NECESSARY, IS SUBSIDIARY TO THE BID ITEM "TRAFFIC CONTROL".

16. ALL W SIGNS HAVE A MINIMUM SURFACE AREA OF 16 SQ. FT. ALL OTHER SIGNS SHALL BE OF STANDARD SIZE AS DIRECTED IN THE MUTCD UNLESS SPECIFIED OTHERWISE ON THE TRAFFIC CONTROL PLAN.

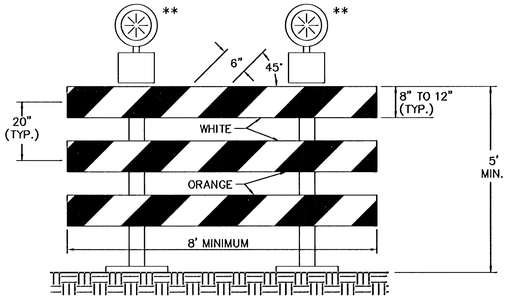

TYPE III BARRICADE WITH LIGHTS

FOR WOODEN BARRICADES NOMINAL LUMBER DIMENSIONS WILL BE SATISFACTORY. FOR RAILS LESS THAN 3 FEET LONG, 4 INCH WIDE STRIPES SHALL BE USED.

WHERE BARRICADES EXTEND ENTIRELY ACROSS A ROADWAY, AND WHERE BOTH RIGHT AND LEFT TURNS ARE PROVIDED FOR, THE CHEVRON STRIPING SHALL SLOPE DOWNWARD IN BOTH DIRECTIONS FROM THE CENTER OF THE ROAD. WHEN A DETOUR IS PROVIDED THE STRIPES SHALL SLOPE DOWNWARD IN THE DIRECTION TOWARD WHICH TRAFFIC MUST TURN.

BARRICADES INTENDED FOR USE ON EXPRESSWAYS, FREEWAYS, AND OTHER HIGH SPEED ROADWAYS SHALL HAVE A MINIMUM OF 270 SQUARE INCHES OF REFLECTIVE AREA FACING TRAFFIC.

** A MINIMUM OF TWO TYPE "A" LIGHTS SHALL BE USED AT EACH LOCATION WHERE A TYPE III BARRICADE OR BARRICADES ARE USED. A LIGHT SHALL BE MOUNTED ON THE OUTSIDE CORNER AT THE END BARRICADES WHEN MORE THAN ONE IS USED. THE LENS SHALL BE A MINIMUM OF 7" IN DIAMETER.

ALL BARRICADES SHALL BE FACED WITH REFLECTIVE SHEETING ON THE FRONT AND BACK FACES.

WARNING LIGHTS

WARNING LIGHTS SHALL BE IN ACCORDANCE WITH THE CURRENT ITE PURCHASE SPECIFICATIONS FOR FLASHING AND STEADY BURN WARNING LIGHTS.

TYPE A LOW INTENSITY FLASHING WARNING LIGHTS AND TYPE C STEADY BURN WARNING LIGHTS SHALL BE MAINTAINED SO AS TO BE CAPABLE OF BEING VISIBLE ON A CLEAR NIGHT FROM A DISTANCE OF 3,000 FEET. TYPE B HIGH INTENSITY FLASHING WARNING LIGHTS SHALL BE MAINTAINED SO AS TO BE CAPABLE OF BEING VISIBLE ON A SUNNY DAY WHEN VIEWED WITHOUT THE SUN DIRECTLY ON OR BEHIND THE DEVICE FROM A DISTANCE OF 1,000 FEET.

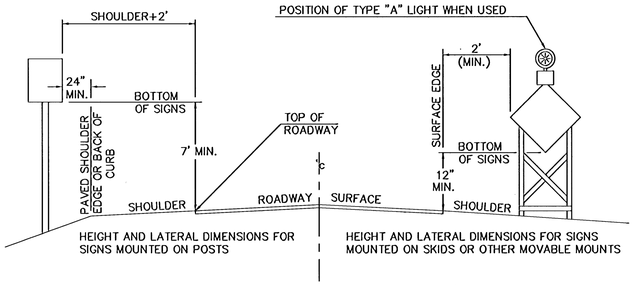

SIGN MOUNTING LOCATIONS

CHANNELIZING DEVICES

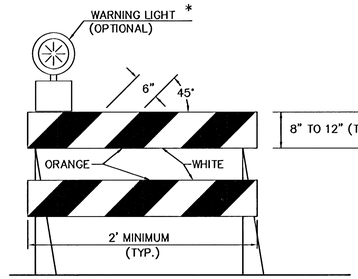

TYPE II BARRICADE WITH LIGHT

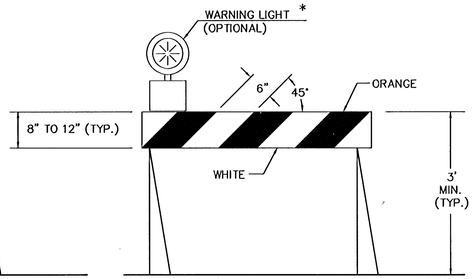

TYPE I BARRICADE WITH LIGHT

* LIGHTS USED ON CHANNELIZING DEVICES
WHEN USED SINGLY TYPE "A" FLASHING
WHEN USED IN SERIES TYPE "C" STEADY BURN
THE LENS SHALL BE A MINIMUM OF 7" IN DIAMETER.

NOTE:

CHANNELING DEVICES PLACED ALONG SHOULDER EDGES OR IN DROP-OFFS SHALL HAVE A MINIMUM OF 24" FROM THE TOP OF THE CHANNELIZING DEVICE TO THE TOP OF THE PAVEMENT.

THE NONMETALLIC DRUMS SHALL BE FULLY REFLECTORIZED WITH TYPE II HIGH PERFORMANCE RETROREFLECTIVE SHEETING. IF THERE ARE NON-REFLECTIVE SPACES BETWEEN ADJACENT STRIPES ON DRUMS, THEY SHALL BE NO MORE THAN 2" WIDE.

THE ENTIRE AREA OF BARRICADE RAILS AND VERTICAL PANELS ARE TO BE FULLY REFLECTORIZED WITH TYPE II HIGH PERFORMANCE REFLECTIVE SHEETING.

ALL TRAFFIC CONTROL SIGNS SHALL BE REFLECTORIZED WITH FLUORESCENT ORANGE PRISMATIC GRADE REFLECTIVE SHEETING.

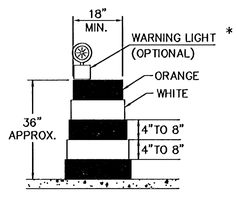

NON-METALIC REFLECTORIZED DRUM WITH LIGHT

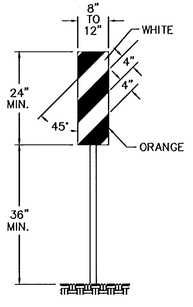

VERTICAL PANEL

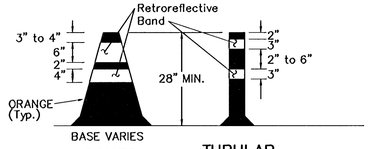

CONES TUBULAR MARKERS

1/28/2002	Chg. Min. Length Type III barricade from 12' to 8'	DRS/MRB
Date	Description	By /Chk

TRAFFIC CONTROL PLAN DETAILS FOR BARRICADES, CHANNELIZATION DEVICES & SIGN MOUNTING LOCATIONS

TC 1.1

PREPARED BY
SEDGWICK COUNTY PUBLIC WORKS
HIGHWAY DEPARTMENT
DAVID C. SPEARS, P.E. DIRECTOR/COUNTY ENGINEER

REVISED	SCALE	DESIGNED	DRAWN	CHECKED	SHEET NO.
	NONE	M.R.B.	D.R.S.	M.R.B.	44
	DATE	10/2001	10/2001	10/2001	
	DWG: Q:\Blocks\Std\Tct-1.dwg				