PIPE FRAME AND GRATING INSTALLATION:

FASTEN ANCHOR ASSEMBLIES TO PIPE FRAME AND GRATING.

POSITION PIPE FRAME AND GRATING IN PLACE AT RCP END SECTION AND MARK EXPANSION ANCHOR LOCATIONS.

INSTALL EXPANSION ANCHORS AND ANCHOR ASSEMBLIES.

INSTALL PIPE FRAME AND GRATING ASSEMBLY.

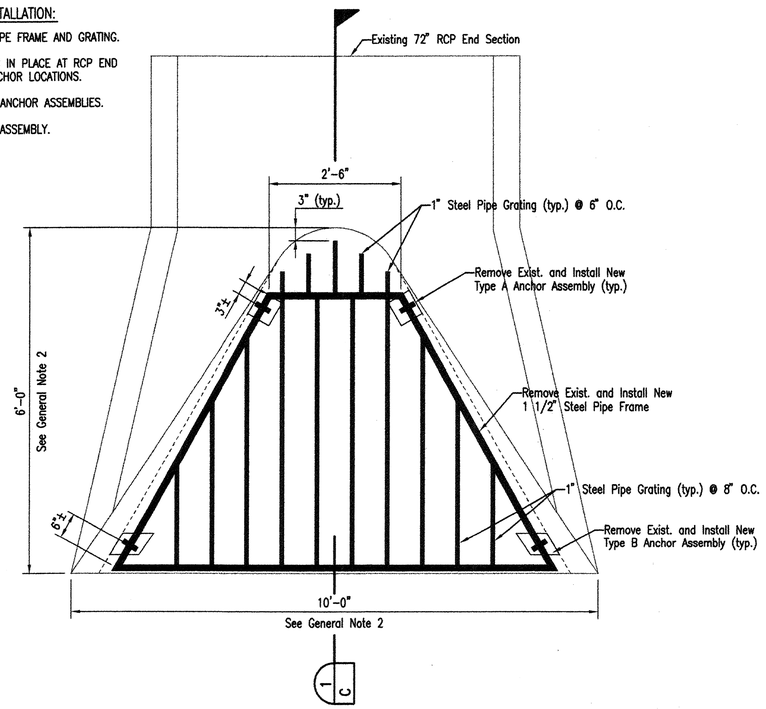

PLAN

SCALE: 3/4" = 1'-0"

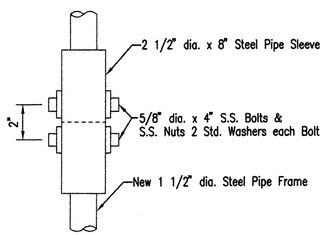

DETAIL A

NOT TO SCALE

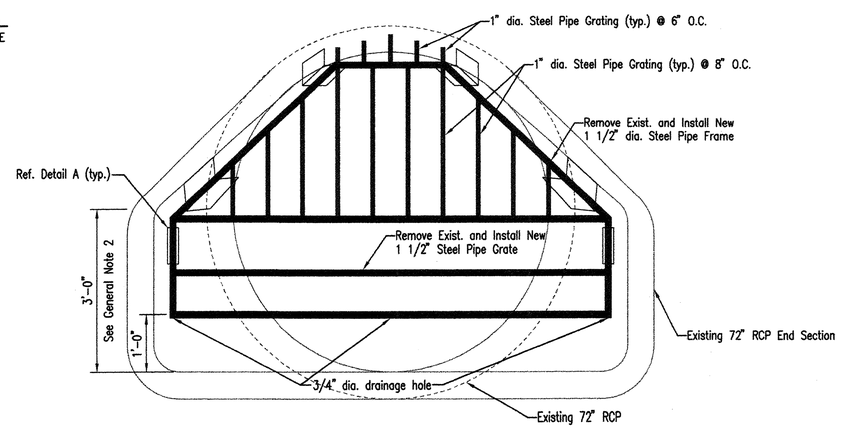

FRONT VIEW

SCALE: 3/4" = 1'-0"

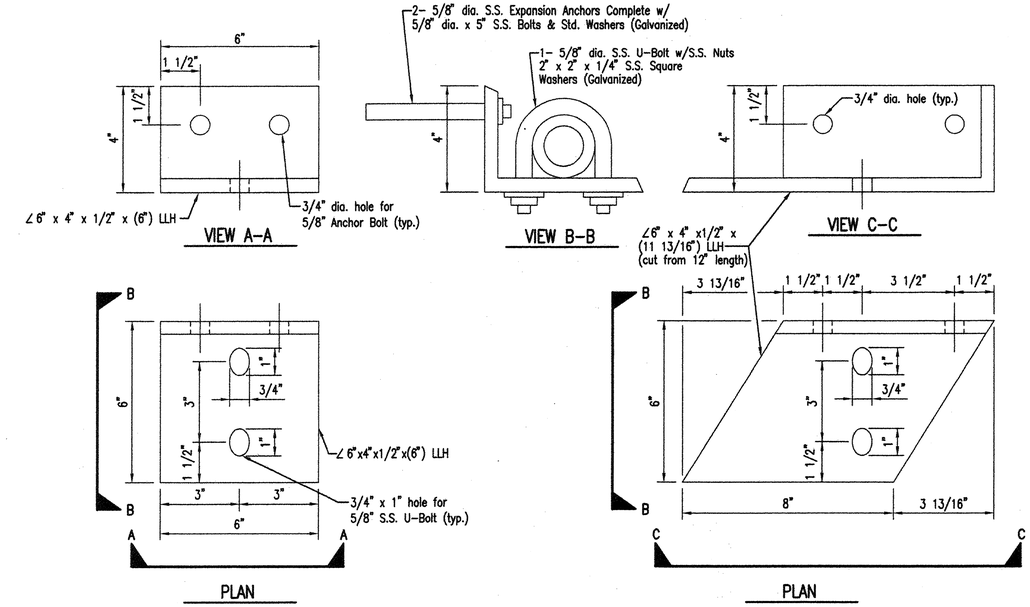

PLAN

TYPE A ANCHOR ASSEMBLY

NOTE: 1 TYPE A ANCHOR ASSEMBLY HAS:

∠6" x 4" x 1/2" x (6") LLH

5/8" dia. S.S. Expansion Anchors Complete w/ 5/8" dia. x 5" S.S. Bolts & Std. Washers (Galvanized)

5/8" dia. S.S. U-Bolt w/S.S. Nuts 2" x 2" x 1/4" S.S. Square Washers (Galvanized)

ANCHOR ASSEMBLY DEAILS

NOT TO SCALE

PLAN

TYPE B ANCHOR ASSEMBLY

NOTE: 1 TYPE B ANCHOR ASSEMBLY HAS:

∠6" x 4" x 1/2" x (6") LLH (Cut as shown)

5/8" dia. S.S. Expansion Anchors Complete w/ 5/8" dia. x 5" S.S. Bolts & Std. Washers (Galvanized)

5/8" dia. S.S. U-Bolt w/S.S. Nuts 2" x 2" x 1/4" S.S. Square Washers (Galvanized)

GENERAL NOTES:

1. PIPE FRAME AND GRATING SHALL BE FABRICATED FROM NOMINAL DIAMETER STANDARD WEIGHT STEEL PIPE.
2. PRIOR TO FABRICATION OF THE GRATING, EXACT DIMENSIONS OF THE FLARED OUT SECTION SHALL BE VERIFIED WITH THE PRODUCER OF THE PIPE AND ANY REQUIRED ADJUSTMENTS IN DIMENSIONS SHALL BE SHOWN ON THE SHOP DRAWINGS.
3. PIPE FRAME AND GRATING AND 6"x4"x1/2" ANGLES FOR ANCHOR ASSEMBLIES SHALL BE HOT DIP GALVANIZED AFTER FABRICATION.

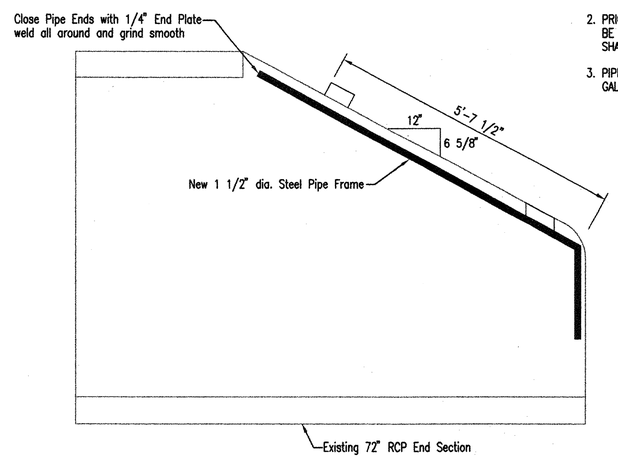

1 C4 SECTION

SCALE: 3/4" = 1'-0"

SCALE: 3/4" = 1'-0"

0 2 4

ESTELL JO HARRISON 15411 9-11-08 KANSAS PROFESSIONAL ENGINEER

No.	Revision	By	Date

CITY OF WICHITA, KANSAS

EXISTING 72" RCP WITH NEW PIPE FRAME AND GRATING DETAIL

STORMWATER SYSTEM IMPROVEMENTS

Professional Engineering Consultants, P.A.
303 S. TOPEKA • WICHITA, KANSAS 67202
316-262-2691 • FAX 316-262-3003

Designed by	KLR, EJJ	Job No.	34-06060-042
Drawn by	BB	Date	SEPTEMBER 2008

Sht. C4 of 8

Saved 09-10-2008, 3:10:32 AM by CAL
Plot Scale 1:1 3:10:32 PM by CAL
Q:\2006\06060\SW PS #4 Seal 08\06060-001-C4 PipeFrameGratingDtl-PS4