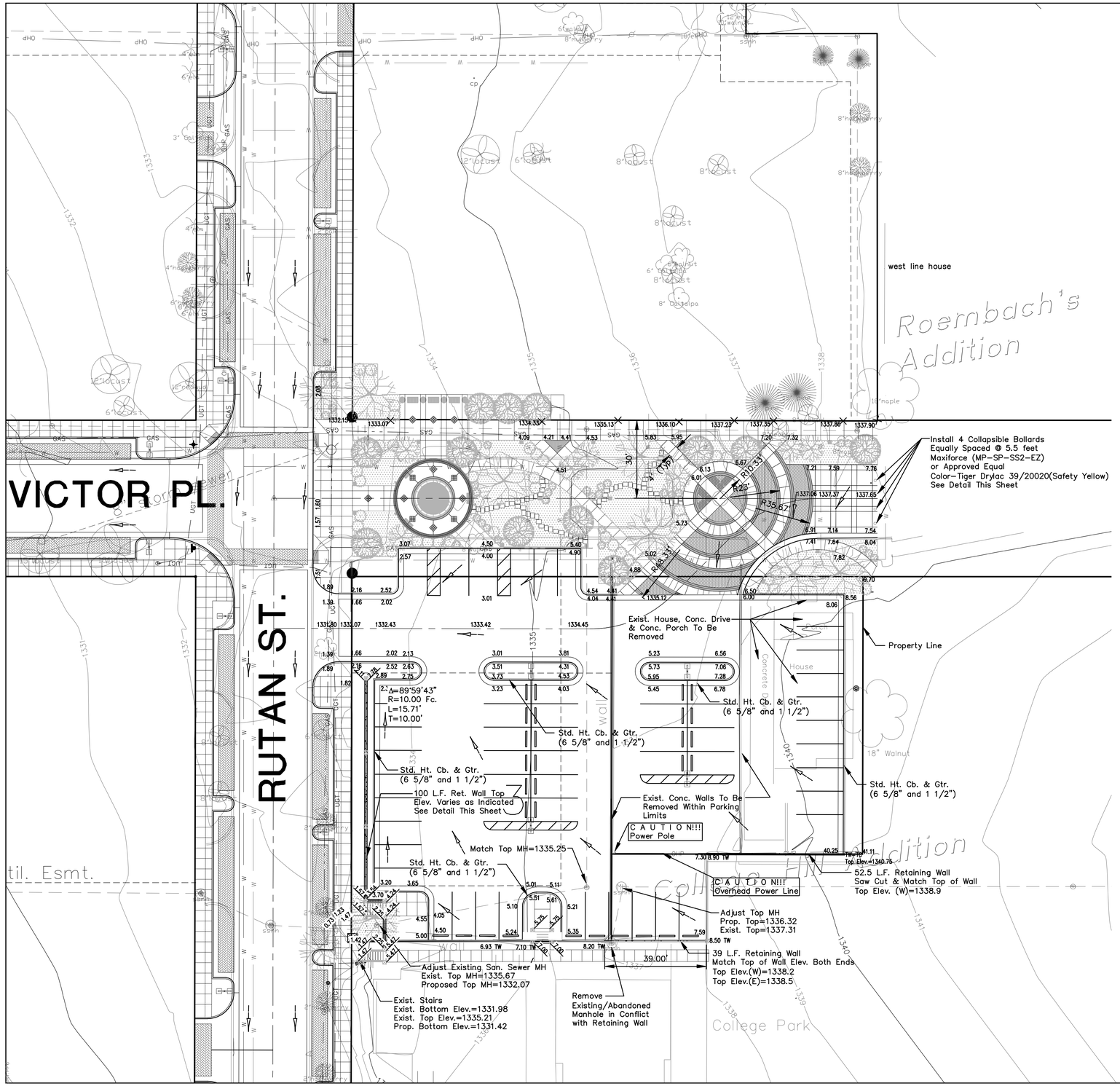

GRAPHIC SCALE

20 0 10 20 40

(IN FEET)
1 INCH = 20 FT.

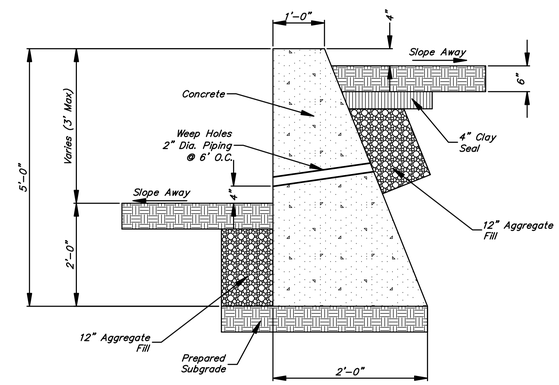

RETAINING WALL DETAIL

N.T.S.

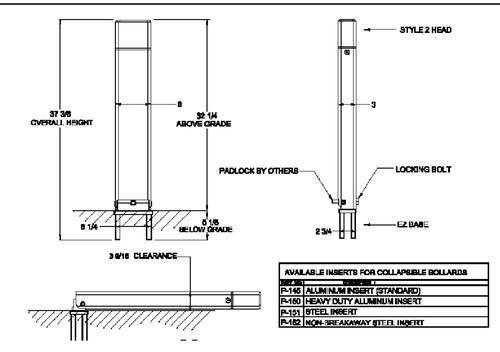

AVAILABLE INSERTS FOR COLLAPSIBLE BOLLARDS	
PART #:	DESCRIPTION:
P-140	ALUMINUM INSERT (STANDARD)
P-160	HEAVY DUTY ALUMINUM INSERT
P-151	STEEL INSERT
P-152	NON-BREAKAWAY STEEL INSERT

BLUE EMBER TECHNOLOGIES LLC
7560 Main Street, Sykesville, MD 21784
www.blueember.com

Description:	MAXIFORCE COLLAPSIBLE BOLLARD
	STANDARD PADLOCK, STYLE 2 HEAD, EZ BASE
Model:	MC-S2-SS2-EZ
Quantity:	
Color:	
Date:	05/19/2004
Approval:	
Revision Date:	08/08/2006
Note:	

NOTES:
Elevations show at top of curb are full height curb elevations. Subtract 0.25 for roll curb elevations.

Grade from top of curb to existing ground when curb is not adjacent to proposed lots. Ensure that grades do not cause water to pond in these areas.

No.	Street and Station	From CL	Description	Elevation

No.	Date	By	Approved	Revision

PARKSTONE ADDITION
STREET IMPROVEMENTS
PARKING LOT AND PARK GRADING
CITY OF WICHITA, KANSAS
JAMES L. ARMOUR, P.E. - CITY ENGINEER
Private Project # 472-85471 O.C.A. # 766166

POE & ASSOCIATES, INC.
CONSULTING ENGINEERS
3940 E. Central, Suite 200 ■ Wichita, KS 67208-4242
Phone 316/685-4114 ■ FAX 316/685-4444

FINAL

Designed By: S. Schmidt/J. Ubert
Drawn By: A. Moss
Poe Job No.: 1879A
Date: September 2008