STANDARD AND LIGHT WEIGHT MANHOLE FRAME AND COVER DETAIL

ADOPTED AS STANDARD DESIGN BY
CITY OF WICHITA, KANSAS

MANHOLE COVER

Weight = 180 Lbs.

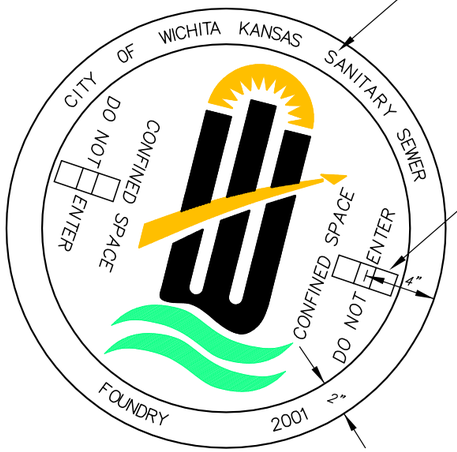

CHANGE TO SANITARY SEWER OR STORM SEWER AS APPLICABLE

CLOSED PICKHOLE (SEE DETAIL)

TOP VIEW

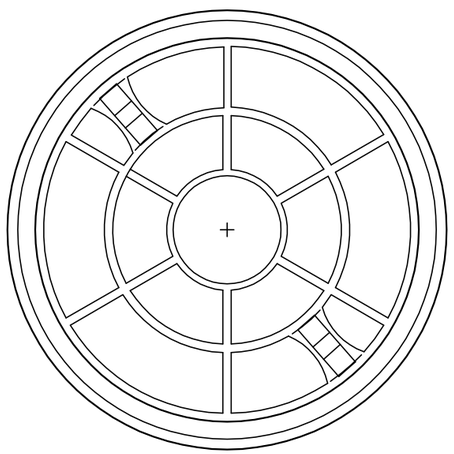

BOTTOM VIEW

PICKHOLE DETAIL

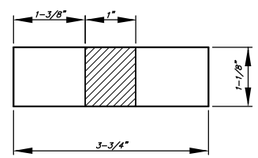

TOP VIEW

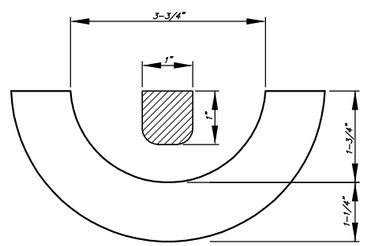

SECTION VIEW

LIGHT WEIGHT MANHOLE FRAME

Weight = 161 Lbs.

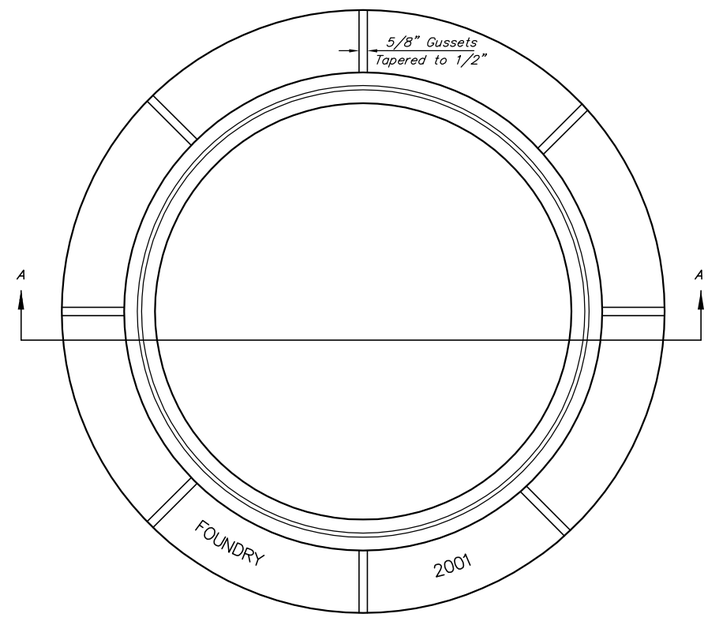

TOP VIEW

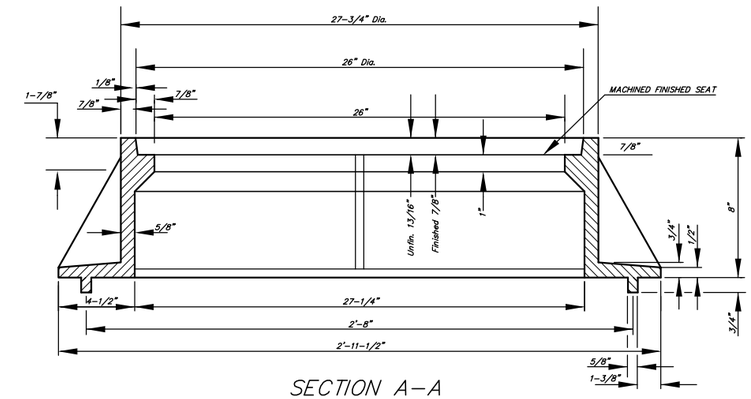

SECTION A–A

STANDARD MANHOLE FRAME

Weight = 250 Lbs.

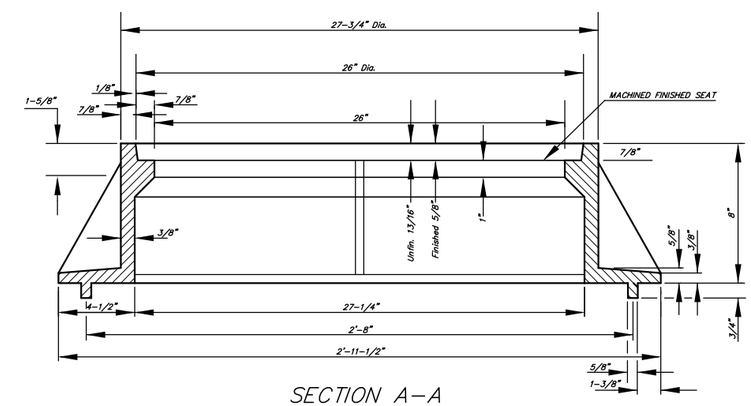

SECTION A–A

LIGHT WEIGHT MANHOLE FRAME

Weight = 161 Lbs.

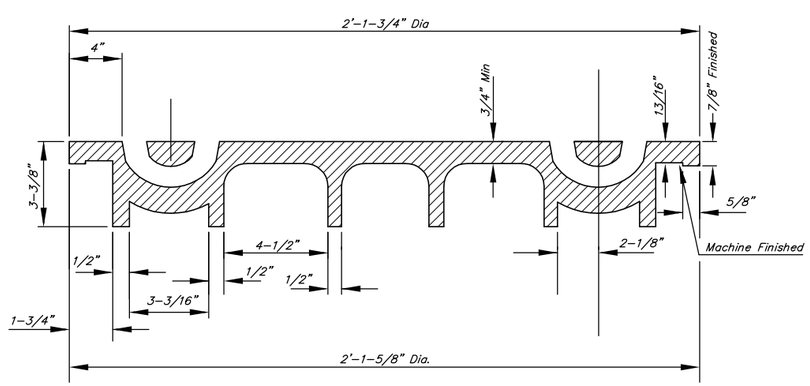

SECTION VIEW

GENERAL NOTES

1. MANHOLE CASTINGS SHALL BE MANUFACTURED USING GOOD QUALITY GRAY IRON CONFORMING TO CLASS 30 OF A.S.T.M. DESIGNATION A–48. DIMENSIONS AND WEIGHTS SHOWN ON THE DETAILED DRAWINGS SHALL BE CONSIDERED AS MINIMUM REQUIREMENTS AND ANY DEVIATIONS FROM THE DIMENSIONS SHOWN MUST BE SPECIFICALLY APPROVED. THE FINISHED CASTINGS SHALL BE OF UNIFORM QUALITY, FREE FROM BLOWHOLES, POROSITY, HARD SPOTS, SHRINKAGE DISTORTIONS OR OTHER DEFECTS.
2. LIGHT WEIGHT MANHOLE CASTINGS SHALL WEIGH A MINIMUM OF 180 POUNDS ON THE SOLID COVER AND 161 POUNDS ON THE MANHOLE RING. THIS IS A TOTAL OF 341 POUNDS ON A RING AND COVER SET. CASTINGS WEIGHING LESS THAN THE MINIMUM SPECIFICATIONS WILL NOT BE ACCEPTED.
3. STANDARD MANHOLE CASTINGS SHALL WEIGH A MINIMUM OF 180 POUNDS ON THE SOLID COVER AND 430 POUNDS ON THE MANHOLE RING. THIS IS A TOTAL OF 430 POUNDS ON A RING AND COVER SET. CASTINGS WEIGHING LESS THAN THE MINIMUM SPECIFICATIONS WILL NOT BE ACCEPTED.
4. MANHOLE CASTINGS SHALL BE MANUFACTURED SUCH THAT A COVER MANUFACTURED BY ANY ONE FOUNDRY WILL FIT INTERCHANGEABLY INTO A FRAME MANUFACTURED BY ANOTHER FOUNDRY AND STILL MEET ALLOWABLE CLEARANCES AND NON–ROCKING REQUIREMENTS. THIS WILL REQUIRE MANUFACTURING OF THE MATCHING FACES ON THE COVER AND THE FRAME TO CLOSE TOLERANCES.
5. THE OUTSIDE CIRCUMFERENCE OF THE VERTICAL FACE OF THE COVER AND THE INSIDE CIRCUMFERENCE OF THE VERTICAL FACE IN THE FRAME RECESS SHALL BE MANUFACTURED TO TOLERANCES SUCH THAT THE CLEARANCE BETWEEN THE COVER AND FRAME WILL NOT EXCEED 1/8" AT ANY POINT AROUND THE CIRCUMFERENCE OF THE COVER. THE SEATING SURFACES BETWEEN THE COVER AND FRAME SHALL BE MACHINED SUCH THAT THESE SEATING SURFACES SHALL MAKE FULL CONTACT FOR THEIR FULL CIRCUMFERENCE TO PRECLUDE THE COVER FROM ROCKING IN THE FRAME.
6. THE MANHOLE FRAME AND COVER SHALL BE MARKED WITH LETTERING INDICATING THE NAME OF THE MANUFACTURER AND THE YEAR WHEN THE COVER OR FRAME WAS CAST. THE COVER SHALL BE FURTHER IDENTIFIED WITH REGARDS TO OWNERSHIP USING LETTERS AT LEAST 1 INCH IN HEIGHT. THIS IDENTIFICATION SHALL BE "CITY OF WICHITA SANITARY SEWER", OR "CITY OF WICHITA STORM SEWER". THE TEXTURE OF THE TOP SURFACE OF THE COVER SHALL BE MANUFACTURED IN A CHECKERED PATTERN DESIGN AS INDICATED ON THE DRAWINGS. SMOOTH BLOCKOUTS SHALL BE UTILIZED TO HIGHLIGHT THE LETTERING ON THE COVER SURFACE. THE TOTAL AREA OF SMOOTH SURFACE BLOCKOUT SHALL NOT EXCEED THE AREA AS INDICATED ON THE DRAWING. POSITIONING OF SMOOTH BLOCKOUTS AND LETTERING MAY VARY FROM THAT SHOWN ON THE DETAILED DRAWING.
7. MANHOLE FRAME WITHOUT MUDRING TO BE USED ONLY ON RECONSTRUCTION PROJECTS WHERE ADDITIONAL CLEARANCE IS NEEDED.

REV. 10–8–04, MCG

CITY OF WICHITA PUBLIC WORKS ENGINEERING

MANHOLE FRAME AND COVER LIGHT WEIGHT

CITY ENGINEER
JIM ARMOUR, P.E.

PROJECT NUMBER	OCA NUMBER	DATE
472–84442	766112	DEC 05

CITY ENGINEER'S OFFICE
CITY HALL – SEVENTH FLOOR
455 NORTH MAIN STREET
WICHITA, KANSAS 67202–1620
(316) 268–4501
(316) 268–4114 FAX

DESIGN	DRAWN
ABC	DEF

SHEET 11 OF 23