STATE	PROJECT NO.	YEAR	SHEET NO.	TOTAL SHEETS
KANSAS	87 N-0514-01	2010	66	148

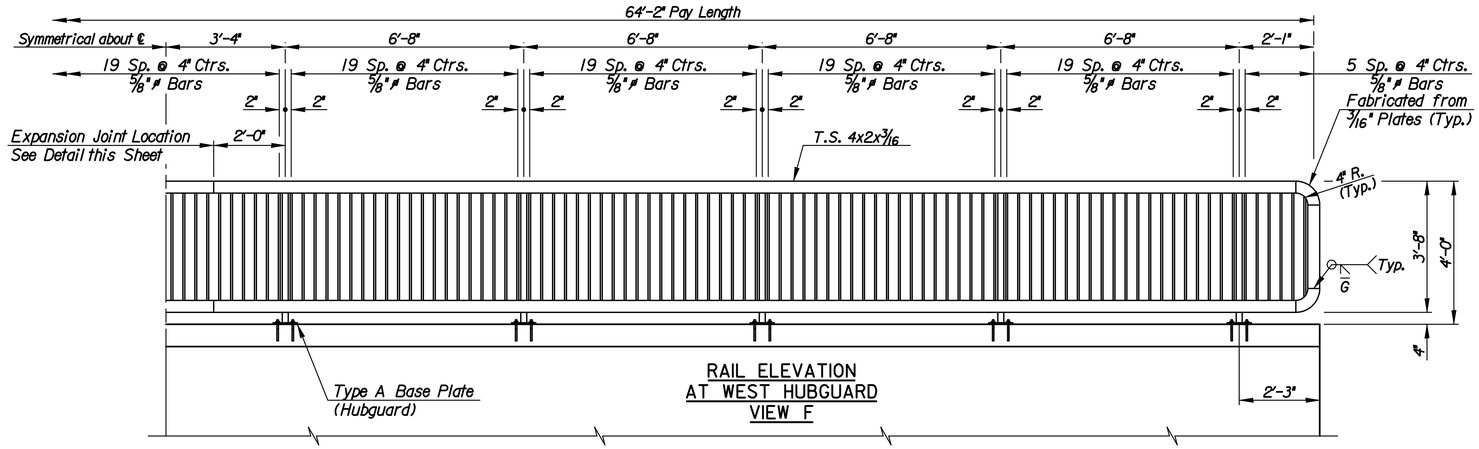

RAIL ELEVATION
AT WEST HUBGUARD
VIEW F

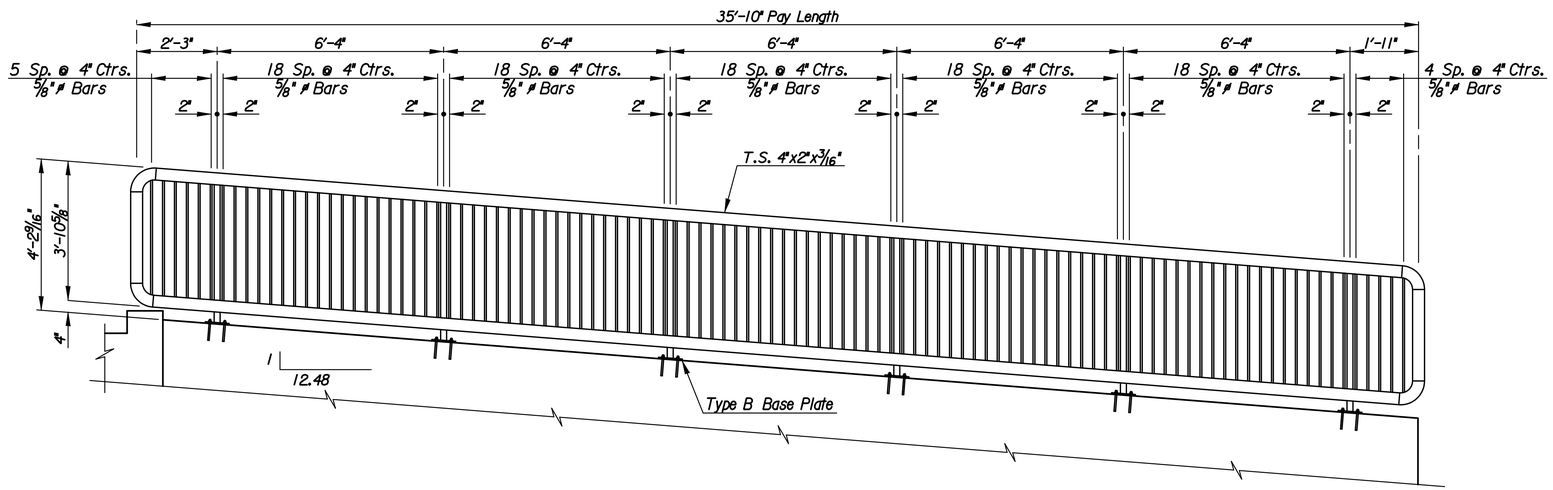

RAIL ELEVATION
AT NORTHWEST WING
VIEW E

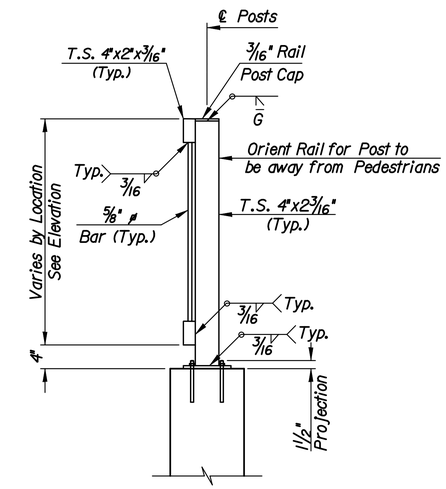

TYPICAL POST

Center Posts on Hubguard or Wingwall

GENERAL NOTES

The horizontal members of the Rail and Posts shall be hollow structural tubing. All structural steel tubing shall comply to A.S.T.M. designation A36 or A500 Grade B respectively.
Rail shall be fabricated in lengths as shown from joint to joint and joint to end.
Post and Bars shall bet set vertical and shimmed if required.
Prior to painting abrasive blast to commercial finish SSPC-SP6 to obtain a surface profile of 1-1/2 Mils. The shop and field coats applied to structural steel shall conform to an inorganic Zinc Primer with water-borne Acrylic finish coat. (The finish coat shall match Carboline #C900, Ebony Black). Provide a color sample to the Engineer with shop drawing submittal.
Material and construction shall conform to the structural welding code A.W.S. D1.1-01.
Shop details must be submitted and approved by the Engineer.

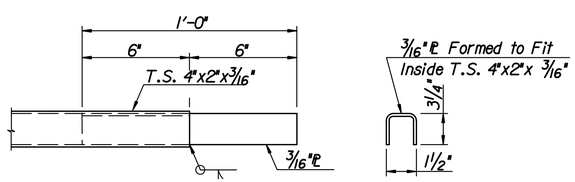

PLAN

PLATE SECTION

SLIDING JOINT DETAIL

NOTE : Sliding Joints, when required, on interior panels shall be centered 2'-0" from posts.

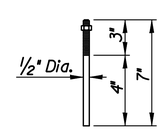

Galvanized (ASTM A153)

(May substitute expandable anchor bolts when approved by the Engineer)

ANCHOR BOLT

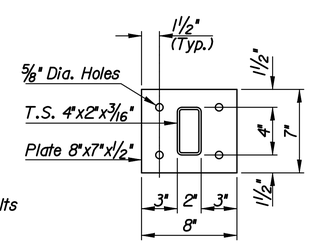

TYPE A BASE PLATE

(10 Required)

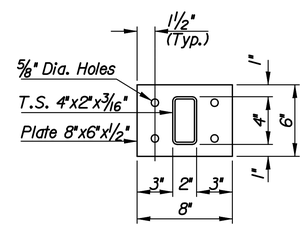

TYPE B BASE PLATE

(6 Required)

RICHARD A. SCHLITT LICENSED 8024 KANSAS PROFESSIONAL ENGINEER
27 May 2010

No.	Revisions	By	Date
1			

CITY OF WICHITA

HANDRAIL DETAILS
(VIEWS E AND F)
127th and Harry St.

PROJECT NO. 87 N-0514-01 SEDGWICK COUNTY

Professional Engineering Consultants, P.A.
303 S. TOPEKA • WICHITA, KANSAS 67202
316-262-2691 • FAX 316-262-3003

Designed by	R.J.M	Checked by	R.A.S.	
Drawn by	W.L.L.	Date Feb. 2010	Job No.	08778

Sh. No. 66

Plotted By : rjm Plotted : 2/17/2010
File : I:\2008\08778\Office Check\08778-066-PedRail-B.dgn