TYPICAL 38' B–B PAVEMENT DETAILS

STA. 5+67.06 TO STA. 7+46.03

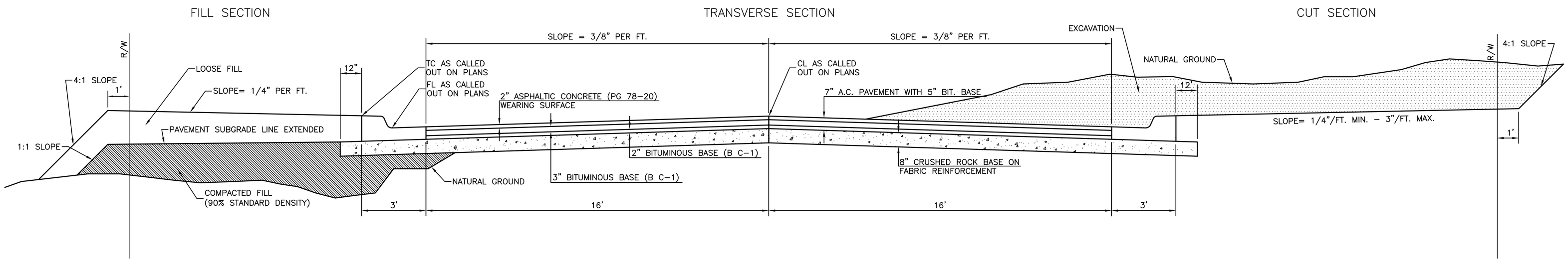

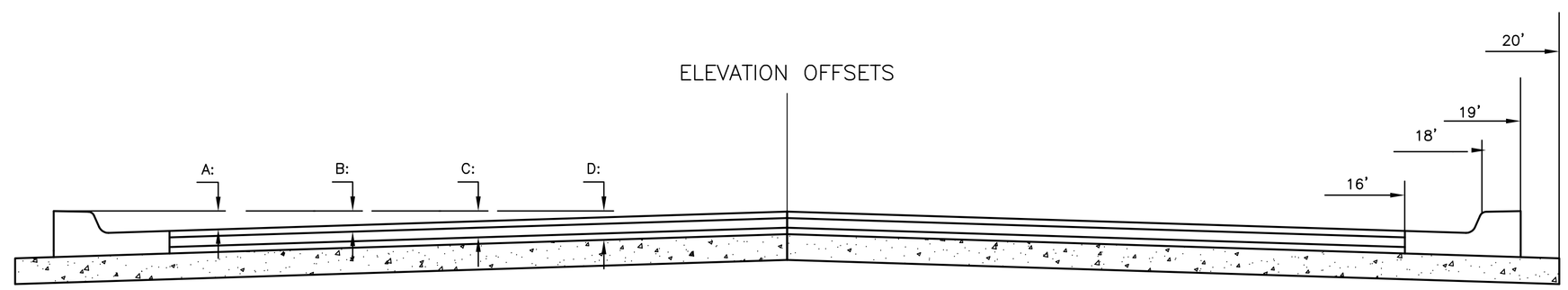

DISTANCE FROM CENTERLINE (LT. & RT.)												
	0'	2'	4'	6'	8'	10'	12'	14'	16'	18'	19'	20'
A: TOP OF SURFACE LIFT TO TOP OF CURBS	.02	.08	.14	.20	.27	.33	.39	.45	.52	–	–	–
B: TOP OF UPPER BASE LIFT TO TOP OF CURBS	.18	.24	.31	.37	.43	.49	.56	.62	.68	–	–	–
C: TOP OF LOWER BASE LIFT TO TOP OF CURBS	.43	.49	.56	.62	.68	.74	.81	.87	.93	–	–	–
D: TOP OF C.C. SUBGRADE TO TOP OF CURBS	.60	.66	.72	.79	.85	.91	.97	1.04	1.10	1.16	1.19	1.22

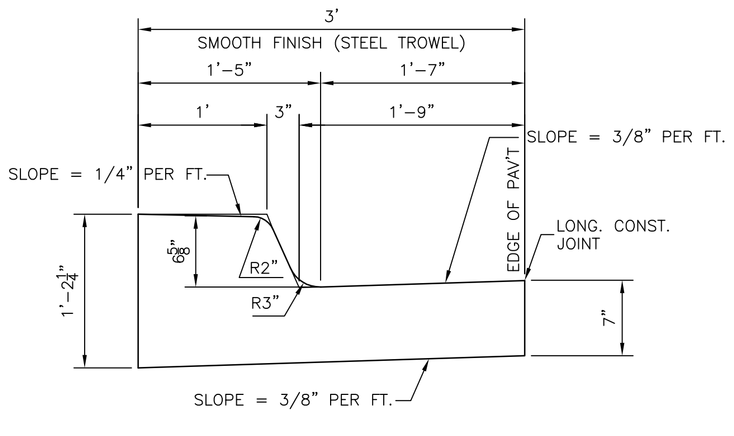

TYPE 2–MODIFIED
COMBINED CURB & GUTTER (6 5/8")

CURB NOTES

1. EXPANSION (ISOLATION) JOINTS SHALL BE CONSTRUCTED A MAXIMUM OF 300' APART AND AT ALL PIS, PCS, CUL–DE–SAC QUADRANTS, AND ENDS OF RETURNS.
2. CONTRACTION JOINTS SHALL BE CONSTRUCTED A MINIMUM OF 12' APART.
3. JOINT SEALER SHALL BE REQUIRED AT ALL JOINTS ON ARTERIAL AND INDUSTRIAL STREETS.

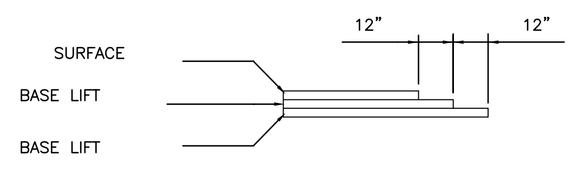

TRANSVERSE CONSTRUCTION
JOINTS

TRANSVERSE CONSTRUCTION JOINTS SHALL BE CONSTRUCTED IN FLEXIBLE BASE PAVEMENTS AT LOCATIONS WHERE PAVEMENT JOINS EXISTING FLEXIBLE BASE PAVEMENT AS SHOWN BY THE DETAIL. ALL COSTS ASSOCIATED WITH THE CONSTRUCTION OF THE TRANS– VERSE JOINT SHALL BE INCLUDED IN THE BID PRICE FOR SQUARE YARDS 7" ASPHALTIC CONCRETE (5" BITUMINOUS BASE).

GENERAL NOTES

FABRIC BASE REINFORCEMENT SHALL BE B X 1100 GEOGRID AS MANUFACTURED BY TENSAR CORPORATION OR APPROVED EQUAL. FABRIC BASE REINFORCEMENT SHALL BE INSTALLED IN ACCORDANCE WITH MANUFACTURER'S RECOMMENDATIONS. CRUSHED ROCK SHALL BE AS SPECIFIED IN SECTION 404 OF THE CITY OF WICHITA STANDARD SPECIFICATIONS.

ROCK BASE IS TO BE COMPACTED AND SMOOTHED WITH A STEEL FACED ROLLER PROIR TO PLACEMENT OF ASPHALT. TACK COAT WILL NOT BE APPLIED TO ROCK BASE.

A TACK COAT OF EMULSIFIED ASPHALT (SS–1H) SHALL BE APPLIED AT AN APPROXIMATE RATE OF 0.05 GALLONS PER SQUARE YARD BETWEEN EACH LIFT OF ASPHALTIC MATERIAL.

BITUMINOUS BASE AND ASPHALTIC CONCRETE WEARING SURFACE SHALL BE PLACED WITH A LAYDOWN MACHINE HAVING AUTOMATIC CONTROLS FOR LINE AND GRADE.

CONSTRUCTION JOINTS IN EACH LIFT SHALL BE STAGGERED A MINIMUM DISTANCE OF ONE (1) FOOT FROM JOINTS IN PRECEDING LIFTS AND PLACED SO THAT A JOINT WILL BE CONSTRUCTED ON THE CENTERLINE OF THE TOP LIFT.

THE ASPHALTIC CONCRETE PAVEMENT BETWEEN THE COMBINED CURB AND GUTTER SHALL BE PAID AS SQUARE YARDS OF 7" ASPHALTIC CONCRETE (5" BITUMINOUS BASE.)

GossenLivingston
Architecture
420 South Emporia
Wichita, KS 67202
Tel: (316) 265–9367
Fax: (316) 265–5646
Email: architects@gl.com

© 2006 Gossen Livingston Associates, Inc.
The drawing and all information herein is the exclusive property of Gossen Livingston Associates, Inc. and is not to be copied or used in any way without the express written consent of Gossen Livingston Associates, Inc. All drawings, specification, ideas, designs and arrangements appearing herein constitute the original and unpublished Work of:
Gossen Livingston Associates, Inc.

JOHNSON & ASSOCIATES
Johnson & Associates, Inc.
100 E. California Ave. - Third Floor
Oklahoma City, OK 73104
(405) 235-8075 FAX (405) 235-8078
Certificate of Authorization #E-1128 EXP. DATE: 12-31-2006

WICHITA WATERWALK

PUBLIC IMPROVEMENTS PHASE 2 PACKAGE 2

Mark	Date:	Description
	5.30.06	BID SET
	4.27.06	FIELD CHECK SET

WICHITA STREET TYPICAL PAVING SECTION

Job No.
Date 05–30–06
Drawn
Checked

P2.8
OF
10
Dwg. 26 of 96

JOB FILE: N:\2215\2215 Ph 2\2215015 Ph 2 Streets\2215015–P28.dwg, 5/26/2006 5:16 PM, Peter Bonnell
XREFS LOADED: 1