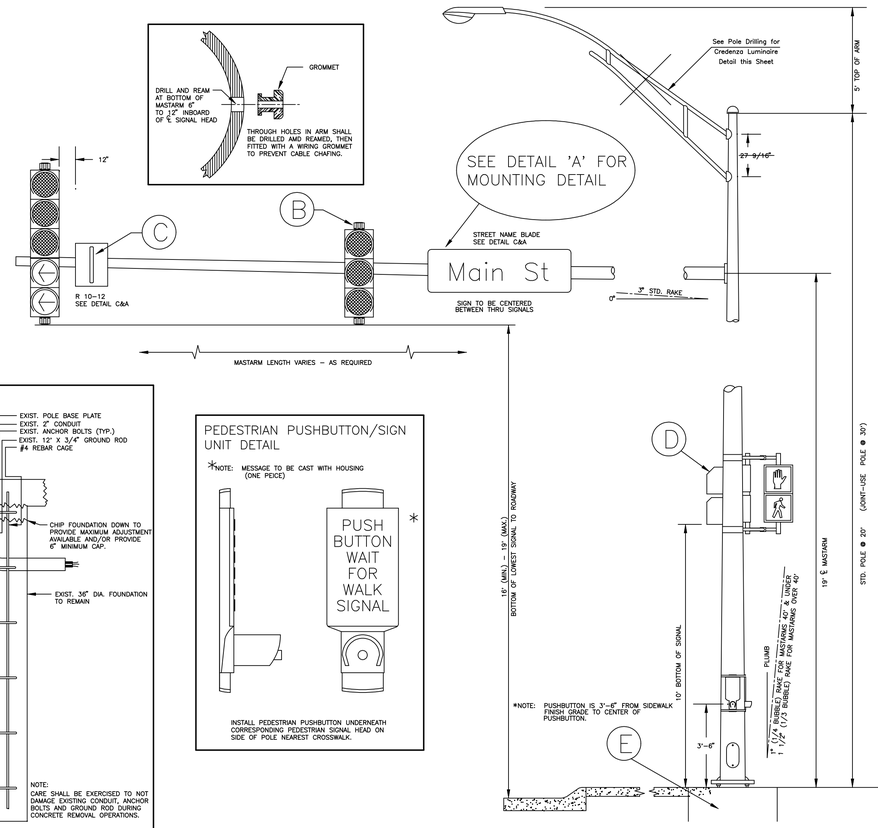

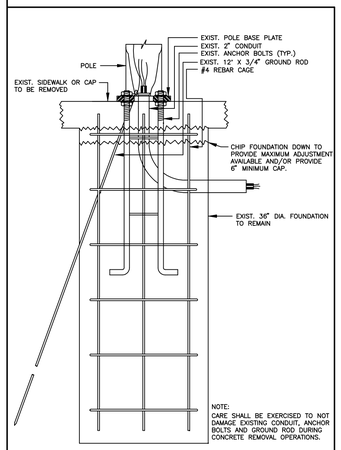

TRAFFIC SIGNAL BASE ADJUSTMENT REMOVAL DETAIL

SEE DETAILS FOR SITUATION 1 AND 2 DEPENDING ON CONDITIONS ENCOUNTERED IN FIELD.

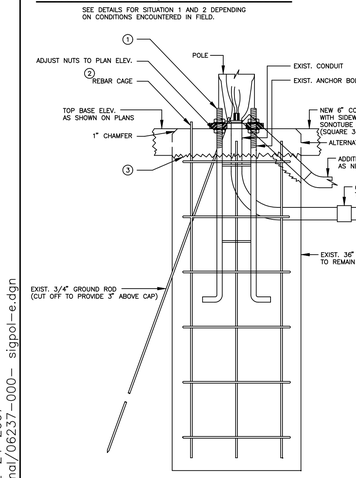

SITUATION 1

WHERE ADEQUATE THREADS ARE AVAILABLE TO LOWER TOP OF BASE TO DESIRED ELEVATION.

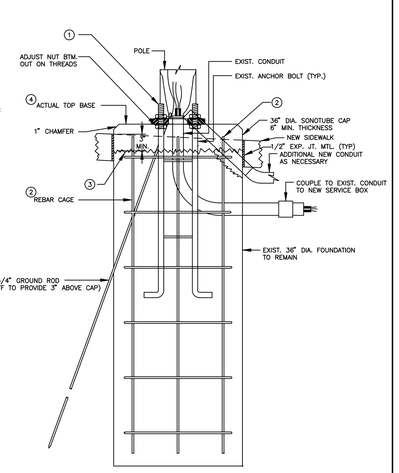

SITUATION 2

WHERE ADEQUATE THREADS ARE NOT AVAILABLE TO LOWER TOP OF BASE TO DESIRED ELEVATION.

1. CLEAN EXIST. THREADS WITH THRAD CHASER. CARE NOT TO DAMAGE EXIST. ANCHOR BOLTS. CUT OFF EXCESS ANCHOR BOLT AND COLD GALVANIZE EXPOSED SURFACES INCLUDING CLEANED THREADS.
2. CUT OFF EXIST. REBAR CAGE TO PROVIDE 2" MIN. CLEAR.
3. CHIP EXIST. BASE DOWN TO PROVIDE 6" MIN. CAP AND 3" MIN. COVER TO TOP OF SIDEWALK.
4. ACTUAL TOP BASE ELEVATION ADJUSTED IN FIELD IS HIGHER THAN PLAN ELEVATION WHEN ENOUGH THREADS ON ANCHOR BOLT ARE NOT EXISTING TO LOWER TO PLAN ELEVATION.

BANDED SIGN MOUNTING BRACKET DETAIL

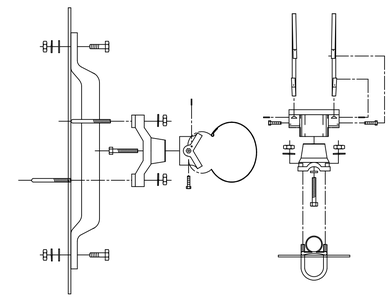

A

TYPE I SIGNAL MOUNTING BRACKET ASSEMBLY DETAIL

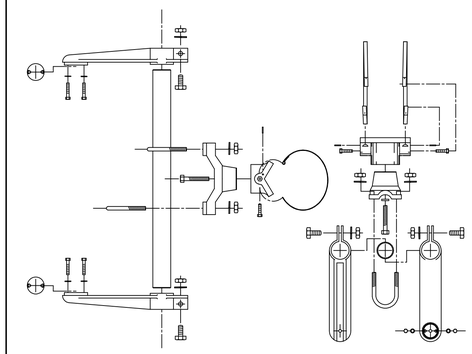

B

STANDARD SIGNING

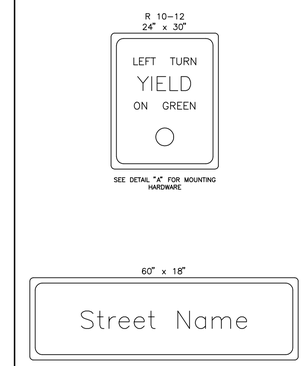

C

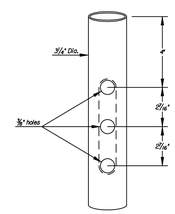

POLE DRILLING FOR CREDENZA LUMINAIRE

(J.U. Poles to be drilled for credenza fixtures)

TYPE III SIDE-OF-POLE MOUNTING BRACKET ASSEMBLY

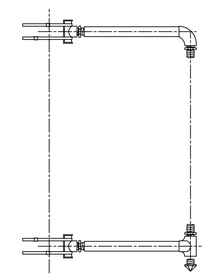

F

TYPE II SIGNAL MOUNTING BRACKET ASSEMBLY (SIDE-OF-POLE)

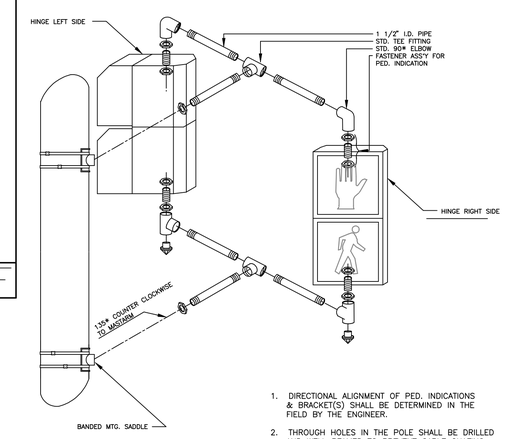

1. DIRECTIONAL ALIGNMENT OF PED. INDICATIONS & BRACKET(S) SHALL BE DETERMINED IN THE FIELD BY THE ENGINEER.
2. THROUGH HOLES IN THE POLE SHALL BE DRILLED AND WELL REAMED TO PREVENT CABLE CHAFING.
3. HINGE PEDESTRIAN SIGNAL DOORS AWAY FROM POLE.

D

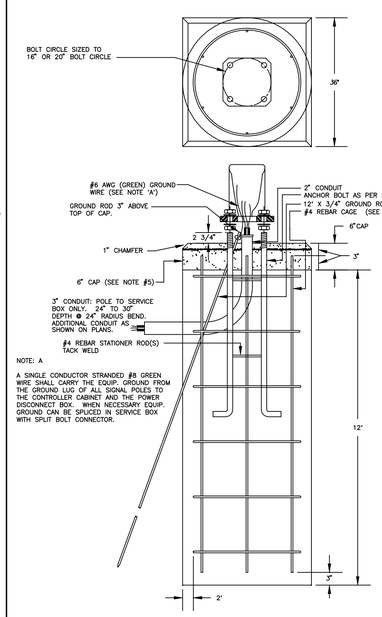

NOTE: A

A SINGLE CONDUCTOR STRANDED #8 GREEN WIRE SHALL CARRY THE EQUIP. GROUND FROM THE GROUND LUG OF ALL SIGNAL POLES TO THE CONTROLLER CABINET AND THE POWER DISCONNECT BOX. WHEN NECESSARY EQUIP. GROUND CAN BE SPLICED IN SERVICE BOX WITH SPLIT BOLT CONNECTOR.

REBAR CAGE

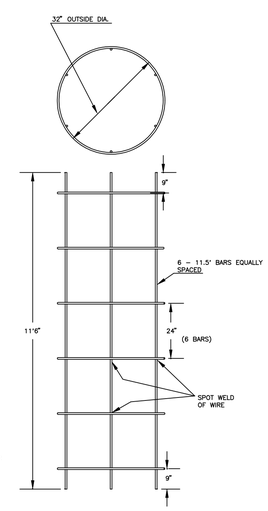

NOTE:

1. THE ANCHOR BOLTS FOR THE SIGNAL POLE SHALL BE TACK WELDED TOGETHER IN A 16" OR 20" DIA. BOLT PATTERN (ON CENTERS AS SHOWN) TO MAINTAIN REQUIRED BOLT CONFIGURATION PATTERN AND TO AID IN VERTICAL POSITIONING WHILE CONCRETE BASE IS POURED.
2. USE ANTI-SEIZE COMPOUND ON ALL THREADS.
3. 12' x 3/4" GROUND ROD TO BE POSITIONED BEFORE POURING BASE.
4. CLASS 'A' CONCRETE SHALL BE USED TO CONSTRUCT BASE.
5. CONSTRUCT A 6" THICK x 36" ROUND CONCRETE CAP AFTER POLE HAS BEEN ERECTED & PLUMBED. CHAMFER EDGE 1". MUST BE APPROVED BY ENG. BEFORE POURED.
6. CONDUIT SHALL HAVE PLASTIC (OR METAL) BUSHING (ABOVE BASE) TO PREVENT CABLE CHAFING.
7. USE #6 BARE COPPER GROUND CONDUCTOR FROM CLAMP TO GROUND BOLT IN ACCESS HOLE.

NEW TRAFFIC SIGNAL POLE BASE DETAIL

E

CITY OF WICHITA

PROJECT DESCRIPTION

STEEL SIGNAL POLE ASSEMBLY DETAILS

PROJECT NUMBER

468-84167

DRAWN BY: T.M.	SCALE	REVISED BY:
DATE: MAY 97	NO SCALE	DATE:

CITY OF WICHITA
DEPARTMENT OF PUBLIC WORKS

DIVISION OF TRAFFIC ENGINEERING

WM. G. McKINLEY P.E. TRAFFIC ENGINEER

SHEET R55 OF R111

date plotted: drp 2-24-2007
i: 2006/06237/signal/06237-000- sigpol-e.dgn