FHWA REGION NO.	STATE	PROJECT NO.	FISCAL YEAR	SHEET NO.	TOTA SHEE
7	KANSAS	87 N-0294-01	2004	8	129

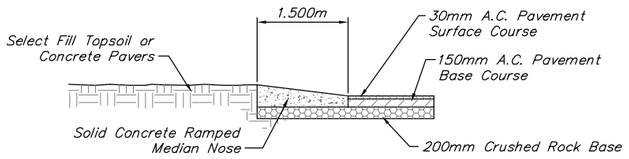

SECTION A–A

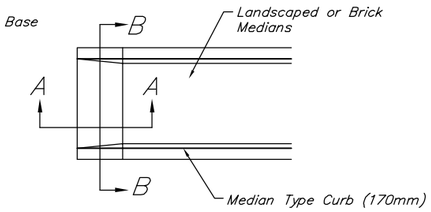

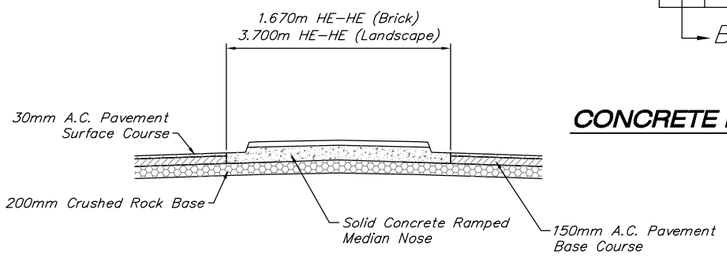

SECTION B–B

CONCRETE MEDIAN NOSE DETAIL

Concrete Median Noses Shall not be Paid for Directly, but Shall be Considered SUBSIDIARY to "Curb & Gutter (Combined)(Median)(170mm)".

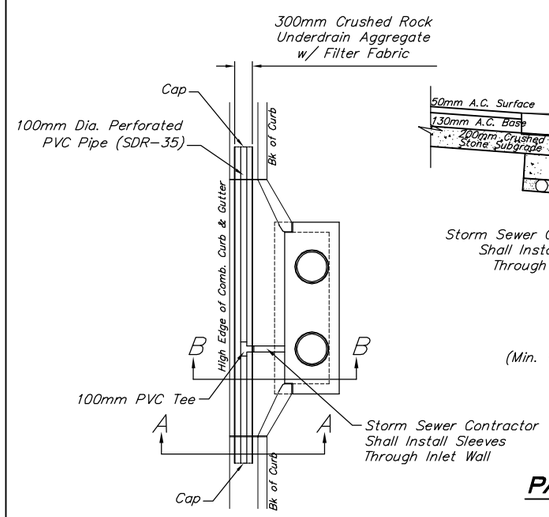

PLAN
NOT TO SCALE

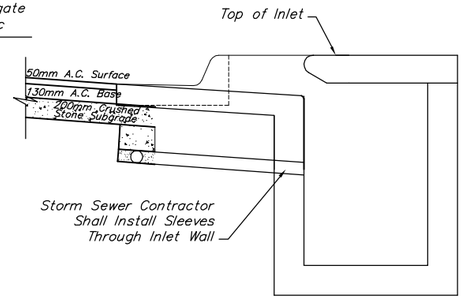

(Min. 16 Perforations Per Lin. Ft. @ 6mm Dia.)
Perforations To Be on Bottom Half

SECTION B–B
NOT TO SCALE

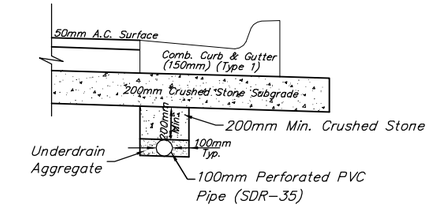

(Min. 16 Perforations Per Foot @ 6mm Dia.)
Perforations To Be on Bottom Half

SECTION A–A
NOT TO SCALE

* UNDERDRAIN AGGREGATE
Percent of Aggregate Retained

1"	0
.75"	0 to 10
.40"	45 to 80
#4	90 to 100
#8	95 to 100

Rock Quality Shall Conform To The Requirements Specified By K.D.O.T. 1990 Edition Standard Specification Subsection 1102 For Durability Class I.

NOTE: Place 100mm Perforated PVC Pipe at all drainage sump locations.
Storm Sewer Contractor shall install sleeves through inlet wall.
Cost of Underdrain System to be SUBDIDIARY to the Bid Item "Reinf. Crushed Rock Base (200mm)".
Inlet Type May Vary From That Shown.

PAVEMENT UNDERDRAIN DETAIL

TYPE–IA INLET
NOT TO SCALE

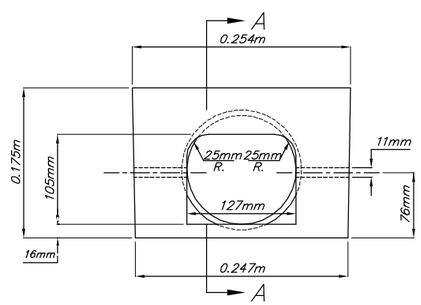

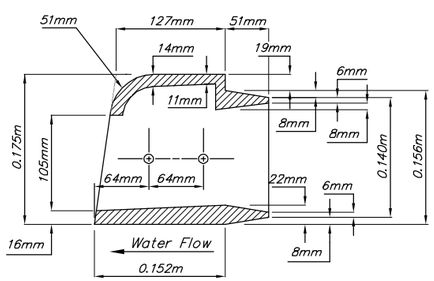

SECTION A–A

DEETER CURB DRAIN

#2449 – 6 CURB (OUT–FLOW)
EST. WT. = 40 LBS (18.14 KG.)

Sta. 1+838.00
Sta. 1+869.00
Sta. 1+956.00
Sta. 2+099.00

Brick Pavers to be installed in crosswalk and/or median locations shall be custom cut to match final concrete dimensions. Contractor shall construct crosswalk blockouts to match nominal paver width dimensions. Fill in with "brick slivers" (defined as pieces smaller than 1/2 of the shortest paver dimension) shall not be allowed, except at the end of crosswalk locations.

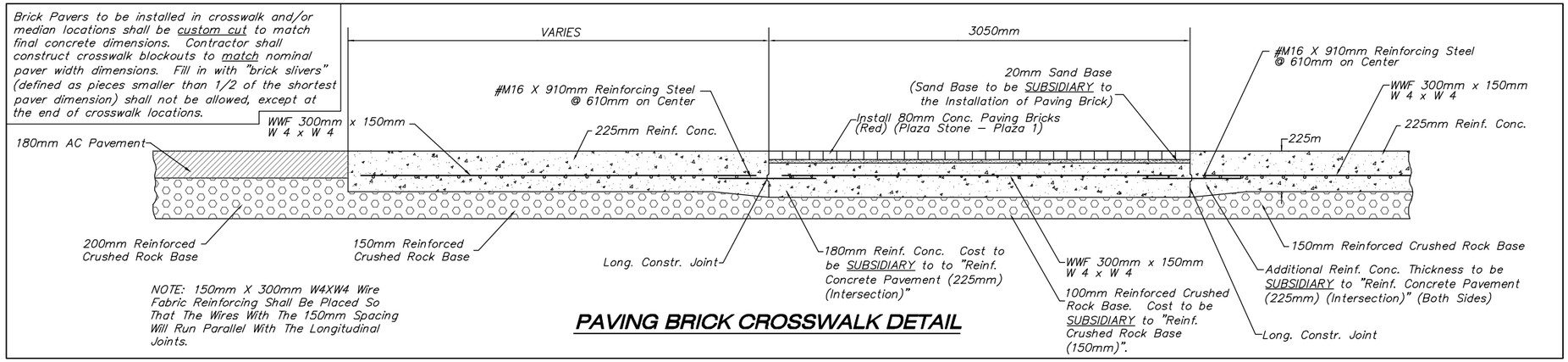

NOTE: 150mm X 300mm W4XW4 Wire Fabric Reinforcing Shall Be Placed So That The Wires With The 150mm Spacing Will Run Parallel With The Longitudinal Joints.

PAVING BRICK CROSSWALK DETAIL

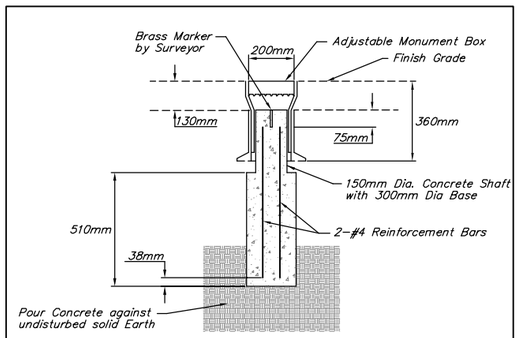

MONUMENT BOX

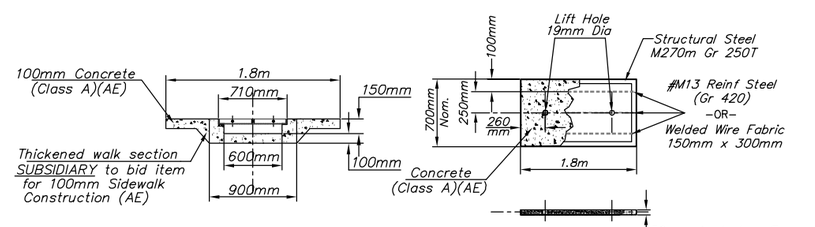

CONCRETE SIDEWALK FLUME DETAIL

Sta. 1+903.000

KDOT METRIC

PROJECT NUMBER	SHEET NAME	ENGINEERING DIRECTORY
472-83863	Misc	F:\\29th North\Details

DESIGN	DRAWN	APPROVED	DATE	SCALE	BAUGHMAN NO
TPV	TPV	JFB	Oct. 2004	None	02-02-E232

CAPITAL IMPROVEMENT PROJECT
MISCELLANEOUS DETAILS

BAUGHMAN COMPANY, P.A.
ENGINEERING, SURVEYING, & PLANNING
316-262-7271 * 315 ELLIS * WICHITA, KANSAS 67211

SHEET 8 OF 129