STATE	PROJECT NO.	YEAR	SHEET NO.	TOTAL SHEETS
KANSAS	87 N-0294-01	2004	52	127

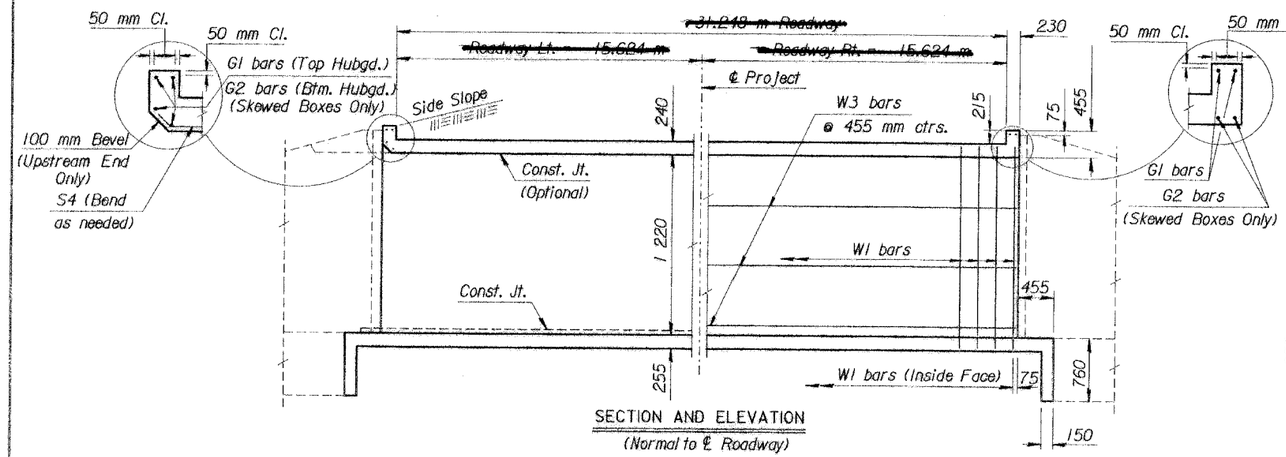

SECTION AND ELEVATION
(Normal to ℄ Roadway)

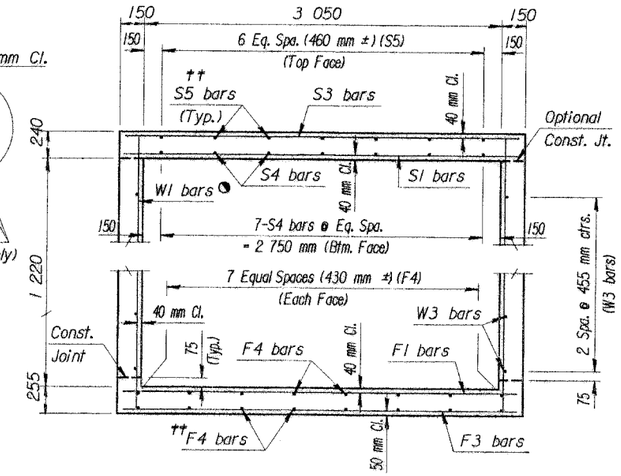

TYPICAL SECTION

◔ See RCB Auxillary Details for Optional Splice.
Note:
S3 bars omitted unless grade box or slab thickness is greater than or equal to 305 mm.

Note:
F3 bars omitted unless floor thickness is greater than or equal to 305 mm.

†† Omit S5 bars when S3 bars are omitted and omit the bottom layer of F4 bars when F3 bars are omitted.

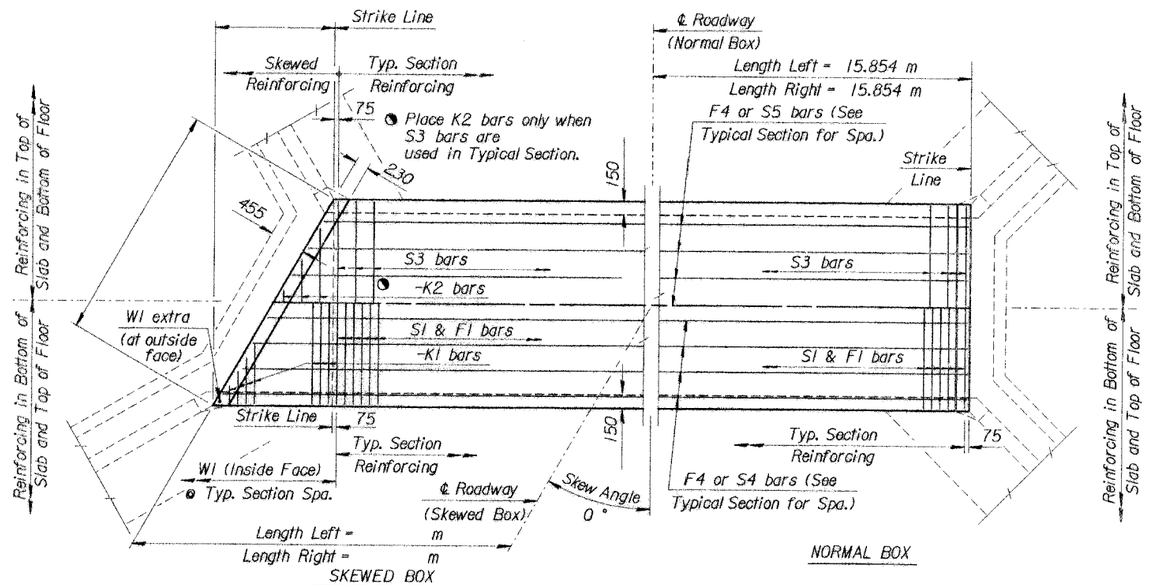

PLAN

GENERAL NOTES

DESIGN SPECIFICATION: AASHTO Specifications, 1983 Edition
DESIGN LOADING: MS18-44
UNIT STRESSES: Grade 28 Concrete f'c = 28 MPa
Reinforcing Steel fy = 420 MPa

FILL HEIGHT: Unless otherwise noted, the Design Fill Height is measured from the riding surface at the culvert and includes the surfacing.

CONCRETE: Use concrete conforming to Grade 28 Concrete. Bevel all exposed edges with a 20 mm triangular molding. Where Grade 28(AE) is specified, place this concrete in the top slab above the Construction Joint.

REINFORCING: Use reinforcing steel conforming to ASTM A615M, Grade 420. All dimensions relative to reinforcing steel are to the centerline of the bar unless otherwise noted.

~~EXCAVATION: Excavation for culverts less than bridge length shall not be paid for directly but shall be subsidiary to Grade 28 Concrete. Excavation for RCB bridges shall be paid for as Class III Excavation.~~

SEAL COURSE: The Engineer may require a seal course. The seal course shall be unreinforced Concrete(Commercial Grade) with a minimum depth of 75 mm or as determined by the Engineer. ~~Concrete for the seal course shall be paid for at the unit price set for Concrete for Seal Course.~~

FOUNDATION STABILIZATION: The Engineer may require Foundation Stabilization. The Engineer shall determine the depth of Foundation Stabilization. Foundation Stabilization shall be paid for at the unit price set for Foundation Stabilization. See the "Auxiliary Details" sheet.

~~QUANTITIES: The quantities shown in the Culvert Summary include apron and/or soil cover quantities when they are required by the plans. Payment for additional quantities that result from including a seal course and/or a floating apron, as a change in the original plans, shall be made at the unit price bid for the various items involved.~~

GRANULAR BACKFILL (WINGWALLS): The Engineer may require special backfill procedures. See the "Auxiliary Details" sheet.

STRIKE LINE: Construct the wingwalls and that portion of the RCB outside the Strike Line level. Construct the wingwall footings with the culvert floor. See the wingwall detail sheets.

CULVERT SUMMARY

Flow Line Elev. Lt. (m)	Flow Line Elev. Rt. (m)	Crown Gr. Elev. (m)	Design Fill Ht. (m)	Skew	Left Wings	Right Wings	Scour Apron	Soil Saver	Granular Backfill	Concrete Barrel (m^3)	Concrete Wings (m^3)	Concrete Total (m^3)	Reinf. Steel (Gr. 420) Barrel (kg)	Reinf. Steel (Gr. 420) Wings (kg)	Reinf. Steel (Gr. 420) Total (kg)
410.188	410.110	412.505	0.915	0	FLARED	FLARED	YES	NO	NO	~~64.50~~	~~9.43~~	~~73.93~~	~~4623~~	~~561~~	~~5184~~

△ Epoxy Coated Bars

BAR SCHEDULE

F1 Size	Spa.	No.	Length	F3 Size	Spa.	No.	Length	F4 Size	Spa.	No.	Length	△ S1 Size	Spa.	No.	Length	Size	Spa.	No.	Length
22	180	176	3 250	N/A	N/A	N/A	N/A	N/A	N/A	N/A	N/A	13	24	~~19 810~~	22	180	176	3 250	N/A

Size	Spa.	No.	Length	△ S3 Size	Spa.	No.	Length	△ S4 Size	No.	Length	△ S5 Size	No.	Length
N/A	N/A	N/A	N/A	N/A	N/A	N/A	N/A	13	21	~~19 610~~	N/A	N/A	N/A

△ K1 Size	Spa.	No.	Length	△ K2 Size	Spa.	No.	Length	W1 Size	Spa.	No.	Length	W2 Size	Spa.	No.	Length
N/A	N/A	N/A		N/A	N/A	N/A		13	230	276	1 625	N/A	N/A	N/A	N/A

W3 Size	No.	Length	Size	Spa.	No.	Length	△ G1 Size	No.	Length	△ G2 Size	No.	Length	Size	Spa.	No.	Length
13	18	10 810	N/A	N/A	N/A	N/A	16	4	~~3 250~~	N/A	N/A	N/A				

Minimum Splice Lengths	
#13	405
#16	510
#19	610

SUMMARY OF QUANTITIES

Grade 28 Concrete	~~19.1~~	m^3
Grade 28 Concrete (AE)	~~25.8~~	m^3
Reinforcing Steel (Gr. 420)	~~3000~~	kg
Reinforcing Steel (Epoxy Coated)	~~1090~~	kg
Class III Excavation		m^3
Foundation Stabilization (Set)	1	m^3
Concrete for Seal Course (Set)	1	m^3
Granular Backfill (Wingwalls) (Set)	1	m^3

NO.	DATE	REVISIONS	BY	APP'D

KANSAS DEPARTMENT OF TRANSPORTATION
Br. No. 87 N-87-.00(000) Sta. 1+625
SINGLE 3.1m x 1.2 m RCB

~~BR-110.4-P-St~~ Sedgwick Co.

FHWA APPROVAL	6-5-96	APP'D	KENNETH F. HURST
DESIGNED	DETAILED	QUANTITIES	TRACED
DESIGN CK.	DETAIL CK.	QUAN.CK.	TRACE CK.

Plotted By: thorsell | Plot Location: $UNIT$
Filename: \\atlnfs\HOFS4\Local Projects\Groups\ED\BTN0294.dgn
Plot Date: 02-AUG-2003 08:30