STATE	PROJECT NO.	YEAR	SHEET NO.	TOTAL SHEETS
KANSAS	87 N-0306-01	2005	36	111

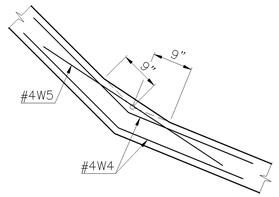

FILLET DETAIL

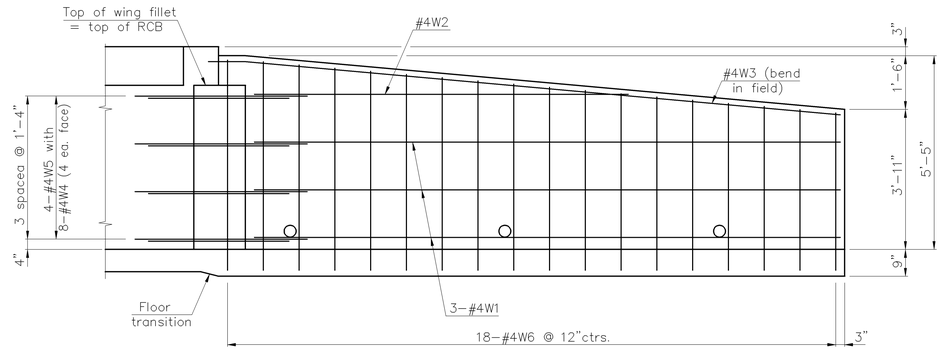

WING ELEVATION

(Earth face shown)

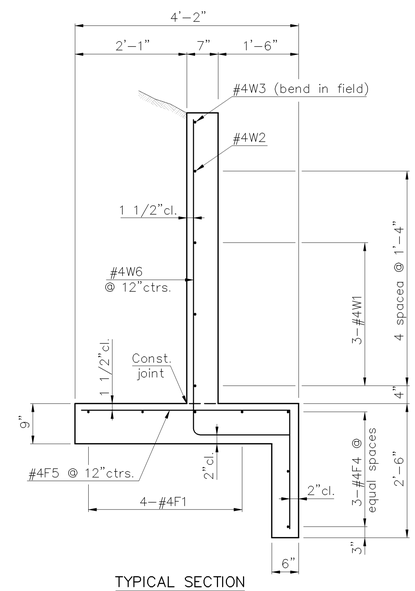

TYPICAL SECTION

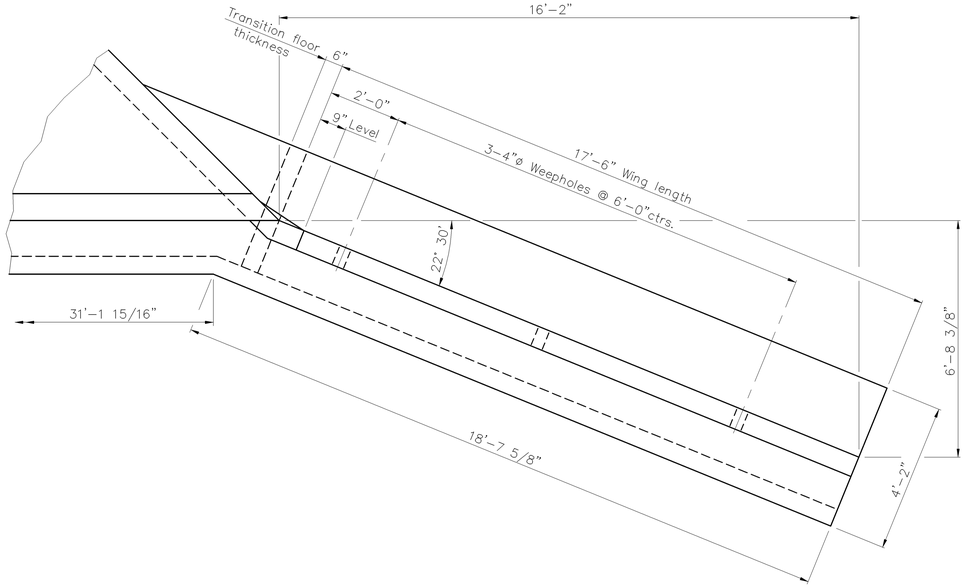

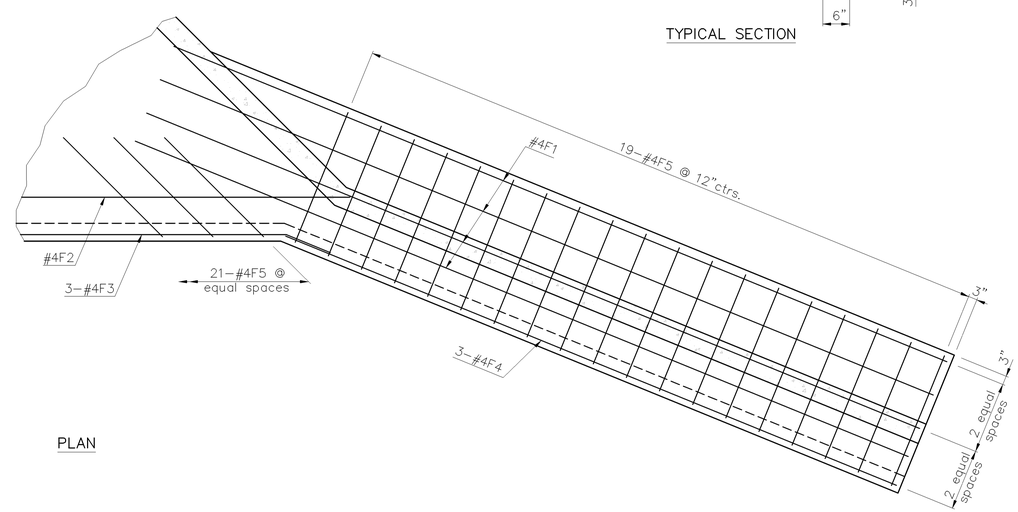

PLAN

WING DETAILS

PROJECT NO. 87 N-0306-01

3-7' X 4' R.C.B.

29TH STREET NORTH

STA. 131+80.17 – 135+82.82 CITY OF WICHITA

CFS

Cook, Flatt & Strobel
ENGINEERS, P.A.

DESIGNED	RSC	SCALE	
DETAILED	DEG	DATE	9/2005
QUANTITIES		SHEET 36	OF 111

J:\2003PROJ\03546\DWGS\RCB3 1"=4'