PROJECT NO.	YEAR	SHEET NO.	TOTAL SHEETS
87 N-0383-01	2006	23	81

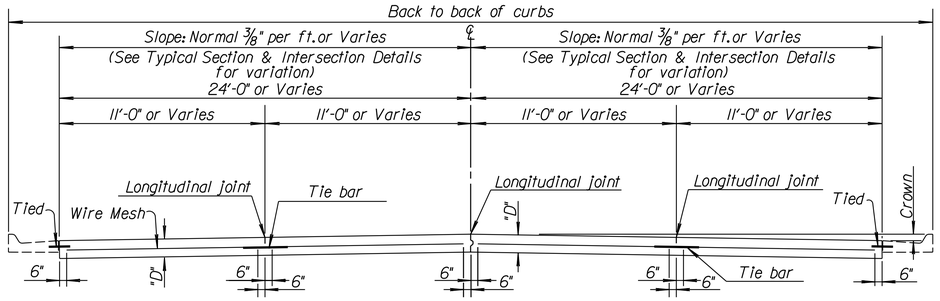

For Curb & Gutter details
See Sh. No. 25

TRANSVERSE SECTION (4 - LANE SHOWN)

D= 9"

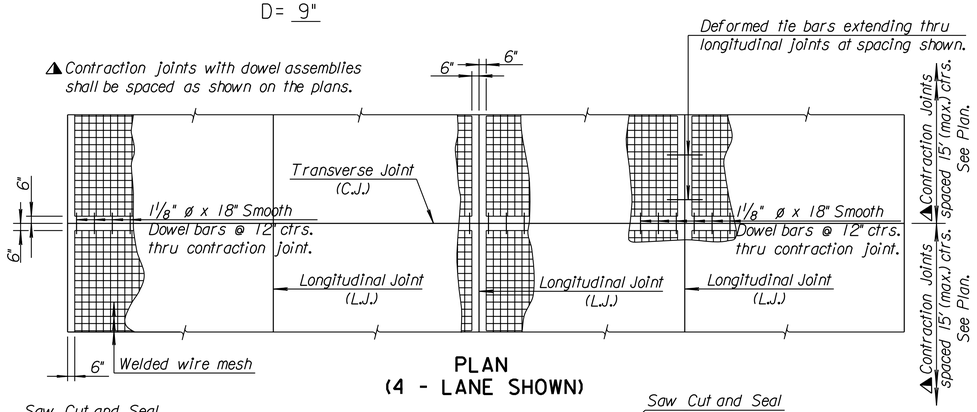

PLAN (4 - LANE SHOWN)

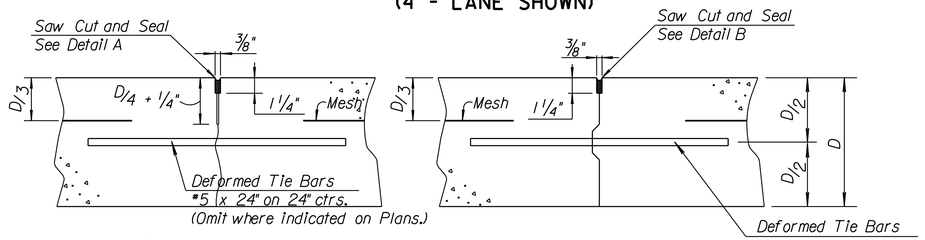

LONGITUDINAL JOINT DETAILS

(L.J.)

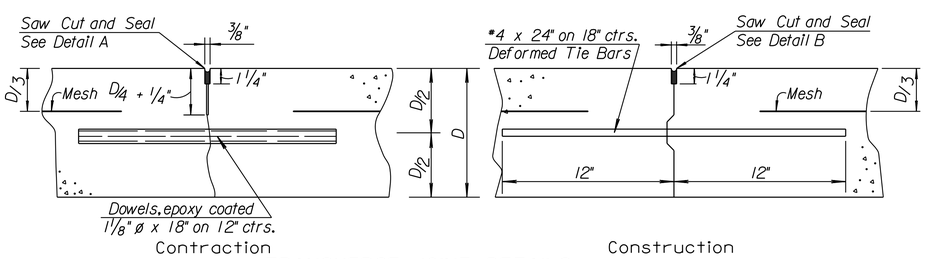

TRANSVERSE JOINT DETAILS

(C.J.)

Note: Contraction joints will be constructed at the planned location or as directed by the Engineer. No transverse construction joint shall be placed within ten (10) feet of a contraction joint.

Note: A construction joint is required when the concrete placement has been interrupted for a substantial length of time or at the end of a days placement.

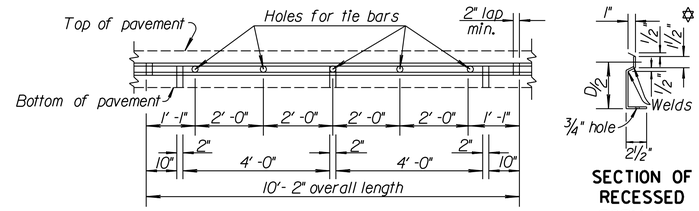

METAL STRIP FOR LONGITUDINAL CONSTRUCTION JOINT

SECTION OF RECESSED FORM LEG

To be used only against forms. Shall not extend through contraction joints.

✡ Snap-in leg or other approved designs may be used in lieu of welded leg.

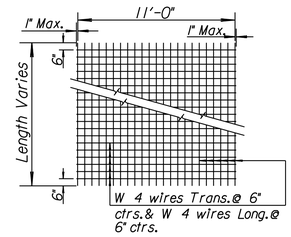

TYPICAL SHEET OF WELDED WIRE MESH (NOT TO SCALE)

(12' Lane width shown)

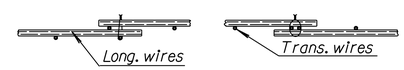

DETAIL OF LAP FOR WIRE MESH

The lap shall extend beyond the first transverse or longitudinal wire of each sheet.

The sheet shall be wired securely at the edges and at intervals not to exceed 2'-6" for the full width of the sheet. Approximate weight of wire mesh = 58 lbs. per 100 sq. ft. Other methods for fastening the sheets of wire mesh at the laps may be used with the approval of the Engineer.

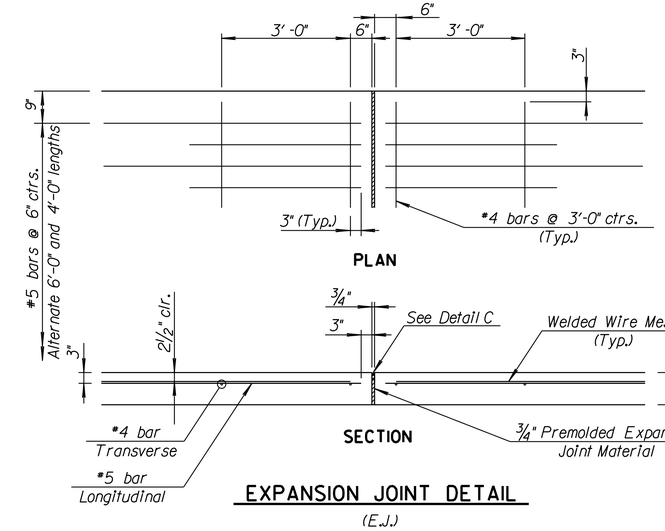

EXPANSION JOINT DETAIL

(E.J.)

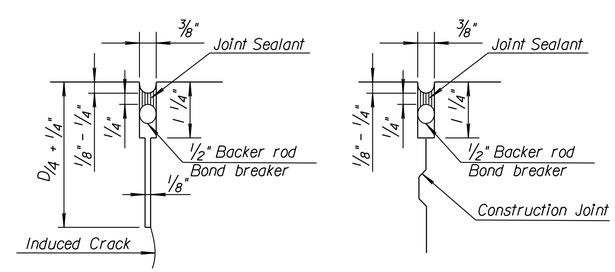

DETAIL A

DETAIL B

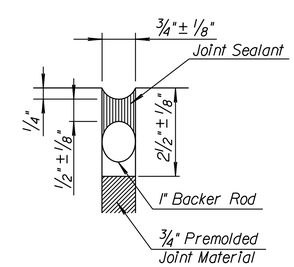

DETAIL C

The 1/8" saw cut (D/4 + 1/4" depth) shall be done initially; the 3/8" saw cut shall be accomplished in a separate operation after concrete has gained sufficient strength to avoid spalling as determined by the Engineer.

Note: Joint Sealant shall be Type I (Non Self-Leveling) Silicone unless otherwise approved by the Engineer.

Note: All sealant shall be 1/8" - 1/4" below surface and a minimum 1/4" thick.

GENERAL NOTE

All deformed tie bars and smooth dowel bars shall be epoxy coated.

Deformed tie bars which require bending shall be billet steel reinforcing bars, Grade 40.

Tie bars shall be placed parallel to the pavement surface with a tolerance of one half inch in 18 inches in the vertical direction. Care should be taken to assure that tie bars are placed approximately perpendicular to the joint in the horizontal plane.

Unless otherwise noted, load transfer devices as shown in detail shall be used at all contraction joints.

Unless otherwise noted, all joints shall have either dowels or tie bars.

All joints on this project shall be sawed and filled with silicone sealant.

Shape of all keyed joints shall be similar to the section of recessed form leg as shown on this sheet.

At each transverse joint location, a 4 to 6 inch wide strip of pavement surface shall be protected from the texturing operation to provide a transverse textureless surface centered over the joint saw cut.

This Sheet adapted from KDOT Standard Sheet RD707.

NO.	DATE	REVISIONS	BY	APP'D

CONCRETE PAVEMENT

Note: Designer shall add applicable dowel sizes.

Drawn By : KDOT Plotted : 8-30-2006 svb
File : i:/2005/05777/standards/05777-rd707.dgn