STATE	PROJECT NO.	YEAR	SHEET NO.	TOTAL SHEETS
KANSAS	87 N-0383-01	2006	35	81

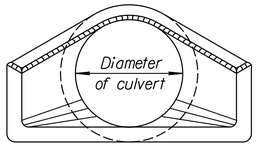

END ELEVATION (TYPE I)

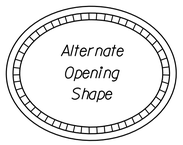

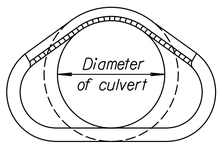

SECTION A-A

Showing rounding of inside edge of end section.

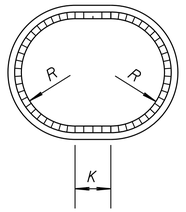

END ELEVATION (TYPE III)

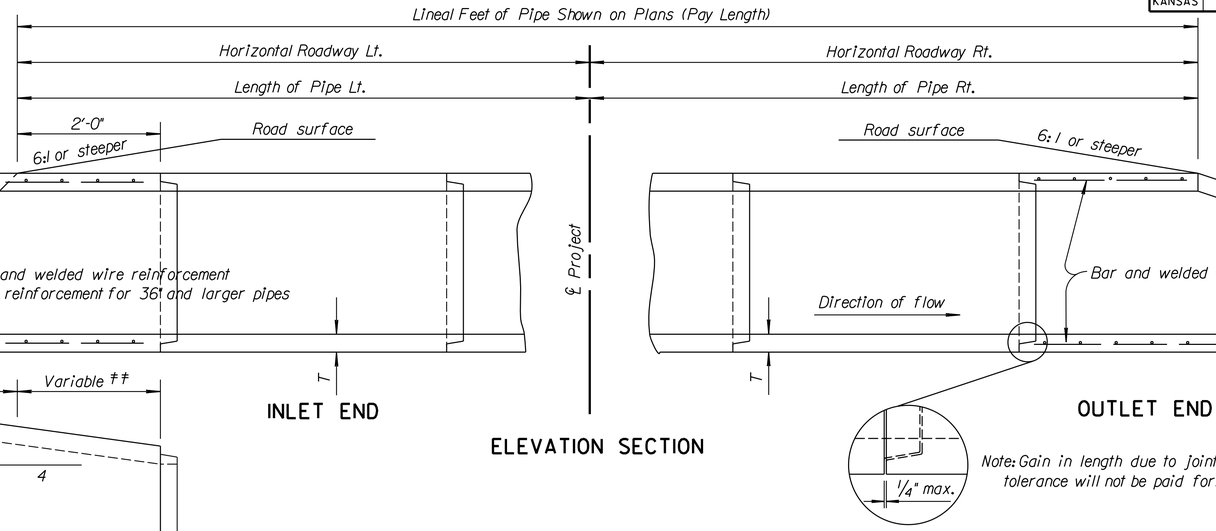

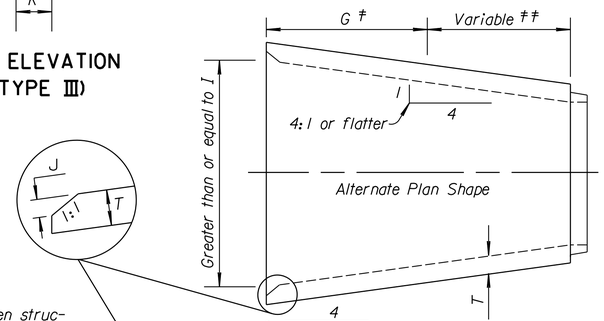

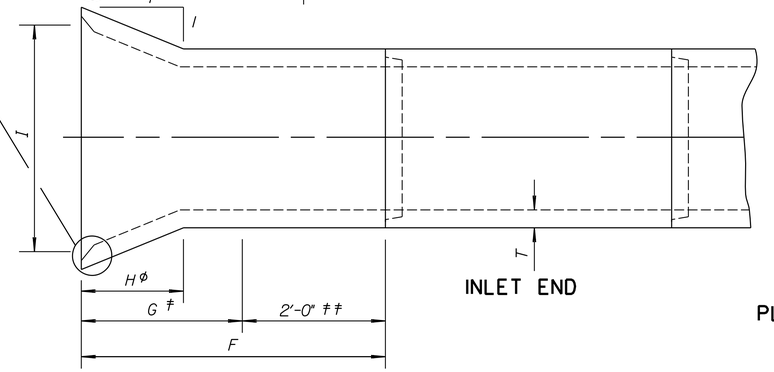

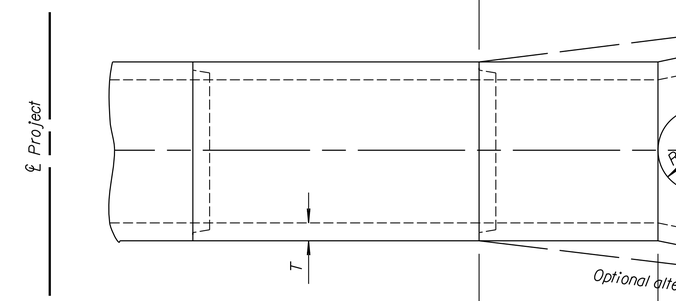

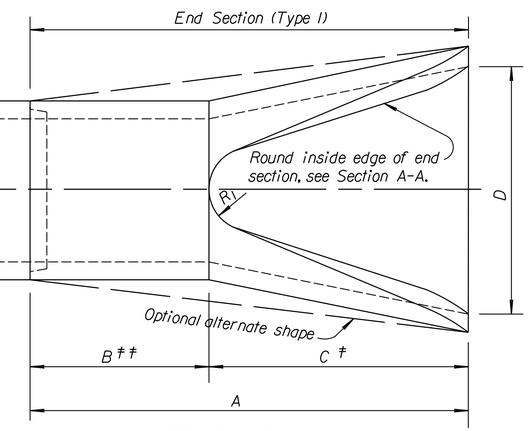

OUTLET END

ϕ Transition to round pipe.
‡ Paid for as separate item of End Section, except when structures shall bid as alternates. In that case End Sections shall be subsidiary to bid item. "Drainage Structure No. ".
‡‡ Included in pay length of pipe.
✳ Minimum waterway area is calculated at the inside of the bevel.

END SECTION (TYPE I) NOMINAL DIMENSIONS

Diam.	A	B‡‡	C‡	D	E	R_1	Slope	T
12"	6'-0 7/8"	4'-0 7/8"	2'-0"	2'-0"	4"	9	3:1	2"
15"	6'-1"	3'-10"	2'-3"	2'-6"	6"	11	3:1	2 1/4"
18"	6'-1"	3'-10"	2'-3"	3'-0"	9"	12	3:1	2 1/2"
24"	6'-1 1/2"	2'-6"	3'-7 1/2"	4'-0"	9 1/2"	14	3:1	3"
30"	6'-1 3/4"	1'-7 3/4"	4'-6"	5'-0"	1'-0"	15	3:1	3 1/2"
36"	8'-1 3/4"	2'-10 3/4"	5'-3"	6'-0"	1'-3"	20	3:1	4"
42"	8'-2"	2'-11"	5'-3"	6'-6"	1'-9"	22	3:1	4 1/2"
48"	8'-2"	2'-2"	6'-0"	7'-0"	2'-0"	22	3:1	5"
54"	8'-2 1/4"	2'-9 1/4"	5'-5"	7'-6"	2'-3"	24	2.4 :1	5 1/2"
60"	8'-3"	3'-3"	5'-0"	8'-0"	2'-11"	24	2:1	6"
72"	8'-3"	1'-9"	6'-6"	9'-0"	3'-0"	24	1.86 :1	7"
84"	9'-3 1/2"	1'-9"	7'-6 1/2"	10-0"	3'-0"	24	1.6 :1	8"

SIDE TAPERED INLET SECTION (TYPE III)-NOMINAL DIMENSIONS

Diam.	Min. W.W. ✳ Area Sq.Ft.	F	G	H	I	J	K	R	T
24"	4.5	4'-3"	2'-3"	1'-5 1/8"	2'-8"	1 1/2"	8"	1'-0"	3"
30"	7.0	4'-9 1/2"	2'-9 1/2"	1'-9 1/2"	3'-4"	2"	10"	1'-3"	3 1/2"
36"	10.1	5'-4"	3'-4"	2'-1 1/2"	4'-0"	2"	1'-0"	1'-6"	4"
42"	13.7	5'-10 1/2"	3'-10 1/2"	2'-5 7/8"	4'-8"	2 1/2"	1'-2"	1'-9"	4 1/2"
48"	17.9	6'-5"	4'-5"	2'-10 1/8"	5'-4"	3"	1'-4"	2'-0"	5"
54"	22.7	6'-11 1/2"	4'-11 1/2"	3'-2 1/2"	6'-0"	3 1/2"	1'-6"	2'-3"	5 1/2"
60"	28.0	7'-6"	5'-6"	3'-6 7/8"	6'-8"	4"	1'-8"	2'-6"	6"
72"	40.3	8'-7"	6'-7"	4'-3 5/8"	8'-0"	5"	2'-0"	3'-0"	7"
84"	54.8	9'-8"	7'-8"	5'-0 3/8"	9'-4"	6"	2'-4"	3'-6"	8"

Dimensions for alternate shapes shall be equal to or greater than those shown in the table, unless otherwise shown.

PIPE CULVERT SUMMARY

Station	Location	Type	Size	Crown Grade Elev.	Flow line		Horizontal Roadway		Degree of Rotation	Length of Pipe		Lin.Ft. of Pipe	End Sects.			
													Type I		Type III	
					LT.	RT.	LT.	RT.		LT.	RT.		LT.	RT.	LT.	RT.

Note: The culverts listed on this sheet may or may not indicate that the culvert installed will be reinforced concrete, steel, or aluminum.

NO.	DATE	REVISIONS	BY	APP'D
1	4- 5-05	Revised reinforcement callout	S.W.K.	J.O.B.

KANSAS DEPARTMENT OF TRANSPORTATION

CONCRETE END SECTIONS FOR CONCRETE PIPES TYPE I & SIDE TAPERED INLET SECTION (TYPE III)

RD662

FHWA APPROVAL	6-10-05	APP'D. James O. Brewer	
DESIGNED	DETAILED	QUANTITIES	TRACED Bowser
DESIGN CK.	DETAIL CK.	QUAN.CK.	TRACE CK. Seltz

Drawn By: KDOT Plotted: 8-30-2006 svb
File: i:/2005/05777/Standards/05777-rd662.dgn