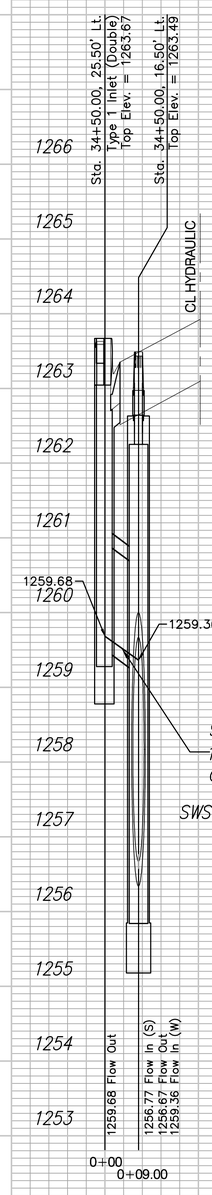

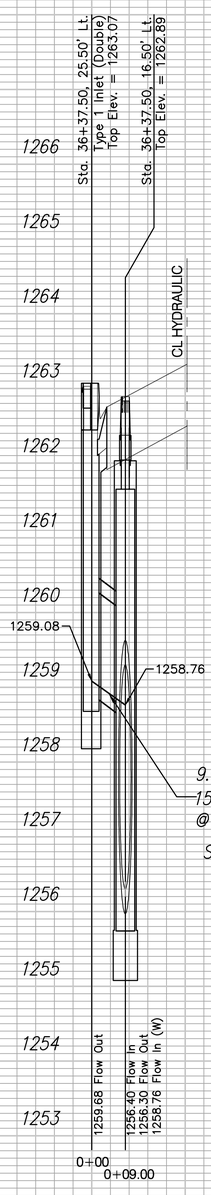

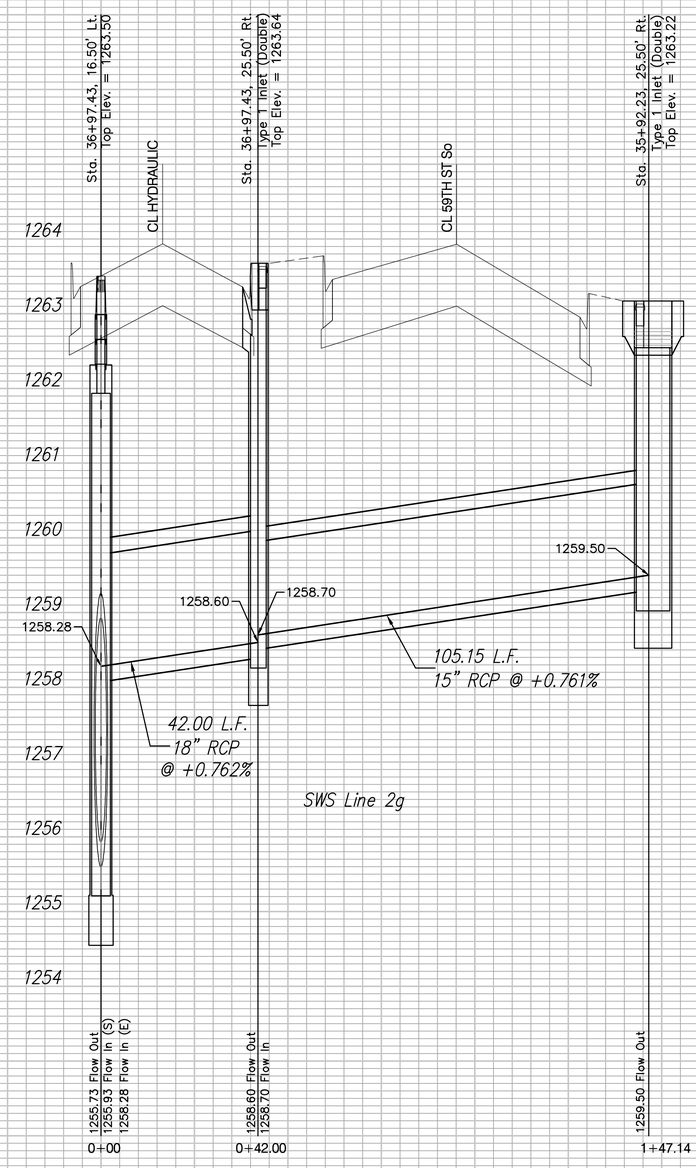

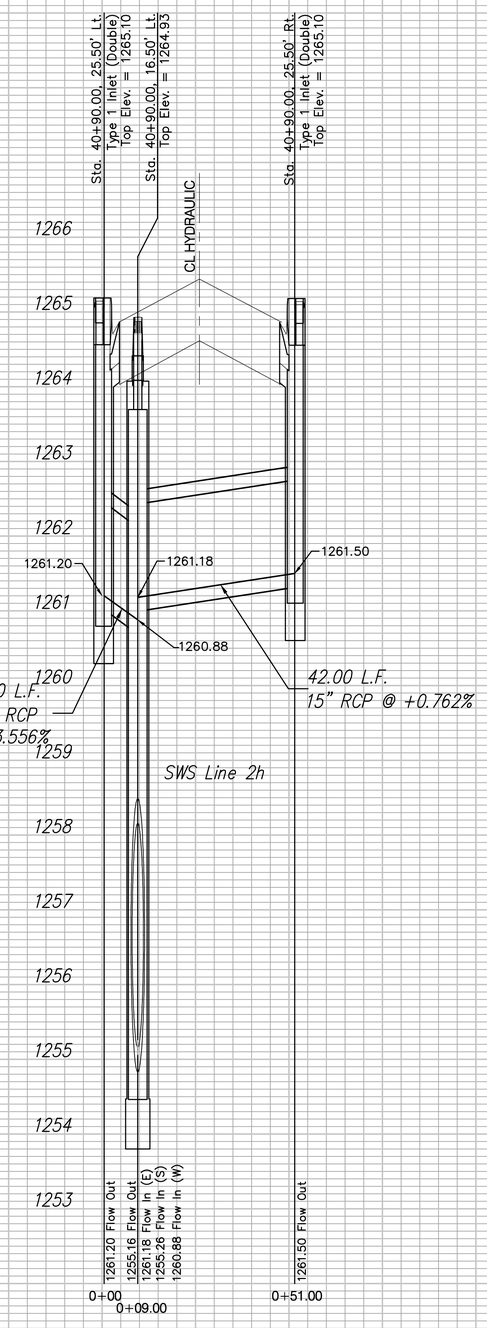

Drawing File: F:\eng\Hydraulic Pha3\Land\dwg\Basemap.dwg {PRF09}

SEPT. 2005

Baughman Company , P.A.
315 Ellis St. Wichita, KS 67211 P 316-262-7271 F 316-262-0149
Baughman ENGINEERING | SURVEYING | PLANNING | LANDSCAPE ARCHITECTURE