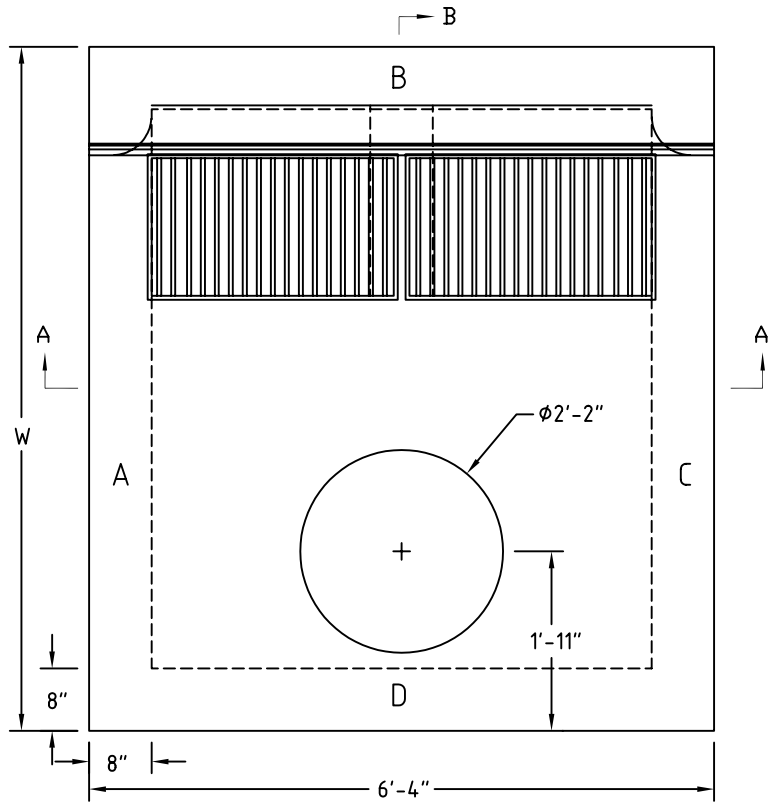

TOP VIEW

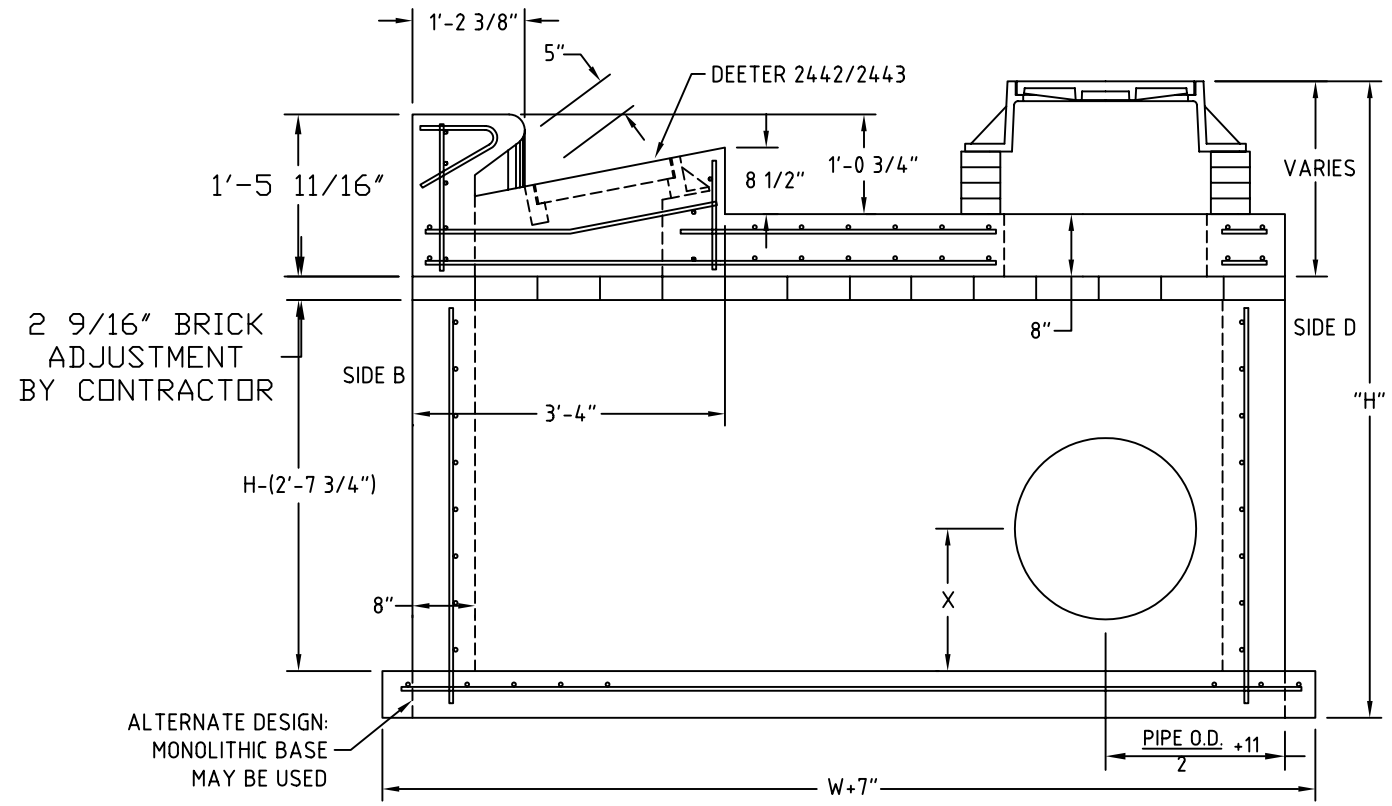

SECTION "B-B"

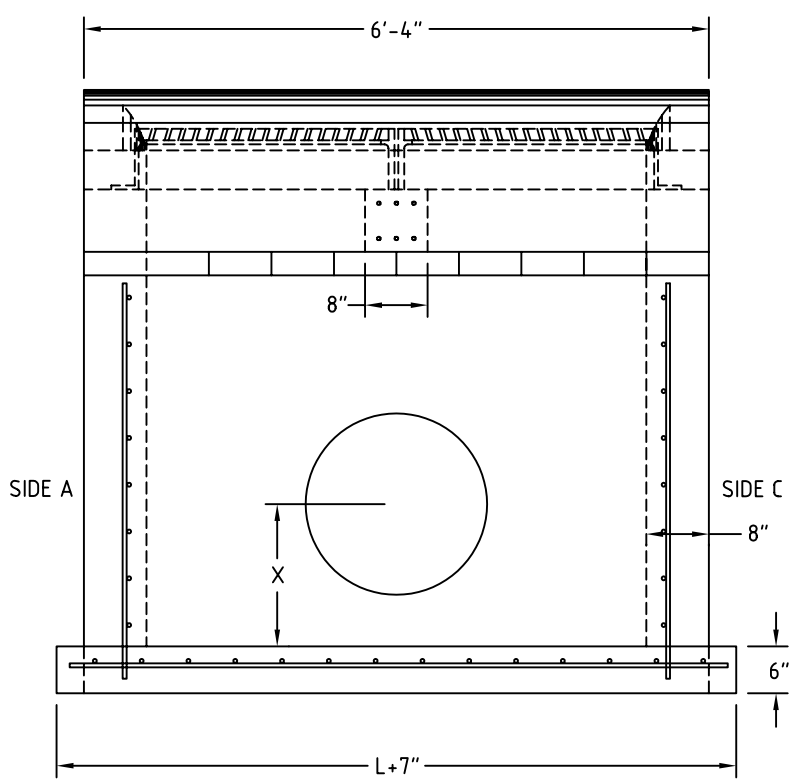

SECTION "A-A"

NOTE:

- ACCESS FRAME AND LID TO BE DEETER 1261 OR EQUIVALENT.
- FRAME AND VANE GRATES TO BE DEETER 2442 / 2443 OR EQUIVALENT.
- ALL REINFORCING TO BE # 4 BARS @ 6" O.C.

YOUNG & ASSOCIATES, P.A.
Civil and Environmental Engineers
100 S. Georgie, Derby, KS 67037
Tele: (316)788-2552
Fax: (316)788-4408

COPYRIGHT 2006 BY YOUNG & ASSOCIATES, P.A. ALL RIGHTS RESERVED. THIS DOCUMENT IS THE PROPERTY OF YOUNG & ASSOCIATES, P.A. AND MAY NOT BE REPRODUCED OR PUBLISHED IN WHOLE OR IN PART, IN ANY FORM OR MANNER WITHOUT THE WRITTEN PERMISSION OF YOUNG & ASSOCIATES, P.A. THIS DOCUMENT MAY BE LENT TO OTHERS FOR REVIEW AND MAY BE REVOCABLY LICENSED FOR THE PURPOSE OF CONSTRUCTION PROJECTS. THIS DOCUMENT MAY NOT BE USED FOR ANY OTHER PURPOSE WITHOUT THE WRITTEN PERMISSION OF YOUNG & ASSOCIATES, P.A. THIS DOCUMENT MAY NOT BE LENT TO OTHERS FOR BIDDING OR NEGOTIATION PURPOSES WITHOUT THE WRITTEN PERMISSION OF YOUNG & ASSOCIATES, P.A.

TYPE 2 INLET, SPECIAL

STREET IMPROVEMENTS IN PAWNEE, FROM PALISADE TO BROADWAY
City of Wichita, Kansas

scale:	as noted
drawn by:	das
checked by:	cry
date:	Mar. 2006
revisions:	