STATE	PROJECT NO.	YEAR	SHEET NO.	TOTAL SHEETS
KANSAS	87 N-0239-01	2004	10	47

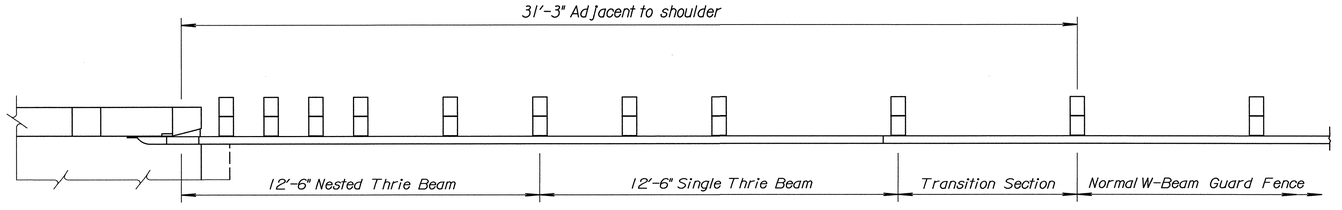

PARTIAL PLAN

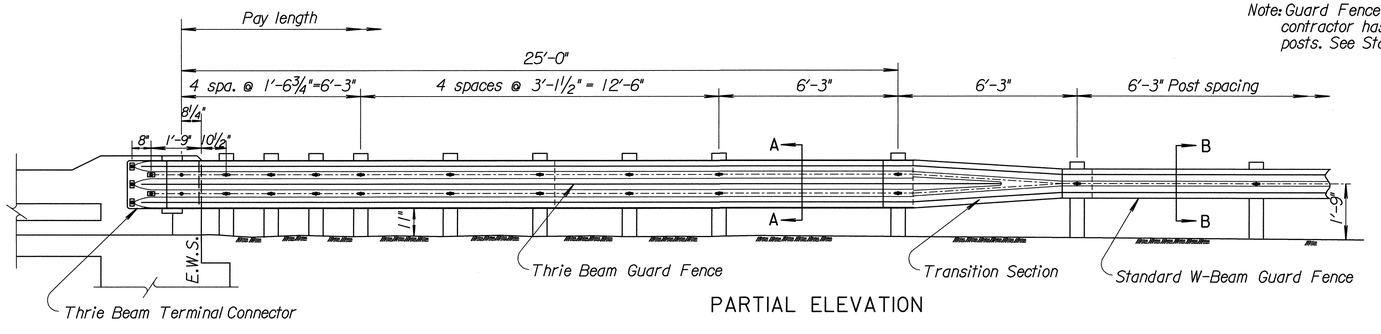

PARTIAL ELEVATION

Note: Guard Fence is shown with wood posts. However the contractor has the option of providing wood or steel posts. See Standard Drawing RD611 for details.

GENERAL NOTE

Rail Elements and Back-up plates shall be #10 or #12 U.S. Standard Gauge except where specific gauge is required, such as at end terminal or bullnose sections.

Galvanized steel rail elements shall be used. All post rail fittings and anchor bolts shall be galvanized in accordance with Standard Specifications.

Guard rail parts furnished under this specification shall be interchangeable with similar parts regardless of the source or manufacturer.

When radius is less than 150', steel plate guard fence rails are to be shop curved.

Terminal connector shall be 10 gauge steel and shall be fabricated in accordance with the KDOT Standard Specification. The connector has the same section as thrie beam guard rail. Terminal connector shall be subsidiary to the bid item "Steel Plate Guard Fence".

See Standard Drawing RD606 for the LET details, Standard Drawing RD606A for BEST details, Standard Drawing RD621 for SRT details, and Standard Drawing RD618 for Guard Fence End Terminal Type II.

All guard fence splices, including special end shoes, shall be lapped in the direction of traffic. Where traffic is temporarily carried in the direction opposite of the final configuration, the rail splices shall be lapped in the direction of the permanent traffic.

A one foot section of thrie beam steel plate guard fence for a back-up plate shall be placed behind non-nested thrie beam rail elements on non-splice posts when steel posts are used. See detail on this sheet.

Bridge rail transition shall consist of one 25'-0" Thrie beam section, one 12'-6" Thrie beam section nested in back of 25'-0" section, and one Thrie beam to W-beam transition section, posts located as shown, and all associated hardware. The remainder of the guard fence shall be W-beam with 6'-3" post spacing and may be furnished in either 12'-6" or 25'-0" sections.

All material and work required for this construction shall be included in the pay item "Steel Plate Guard Fence".

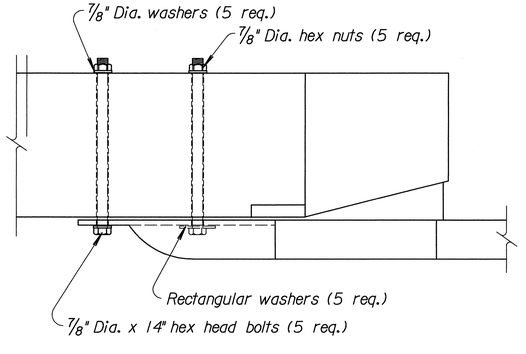

DETAIL BRIDGE ATTACHMENT

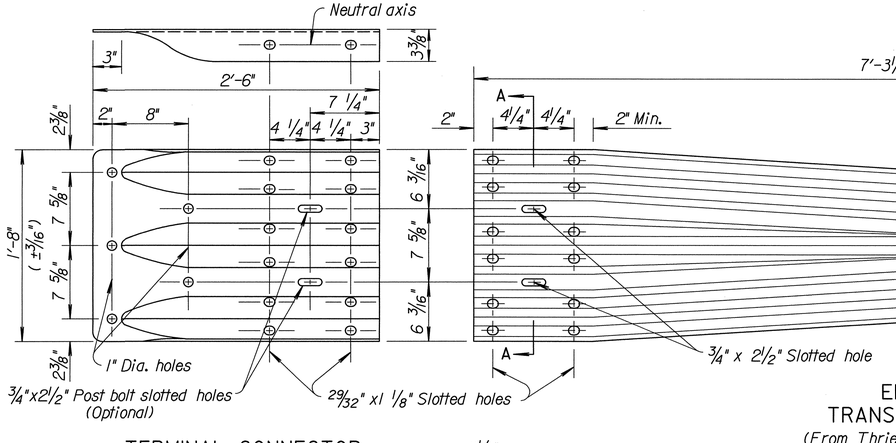

TERMINAL CONNECTOR

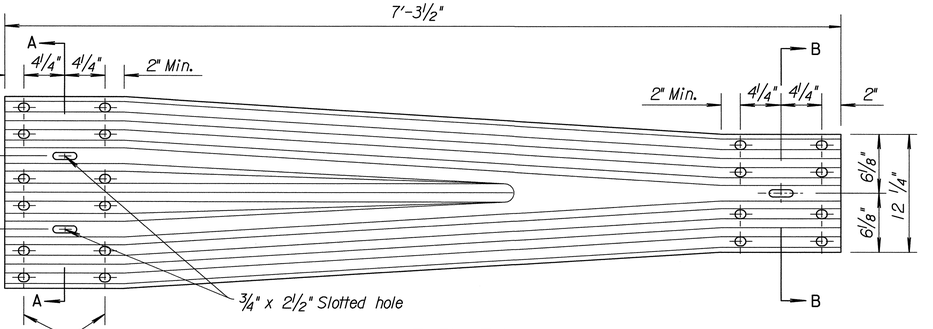

ELEVATION
TRANSITION SECTION
(From Thrie Beam to W-Beam rail)

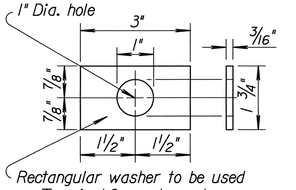

RECTANGULAR WASHER
(Other approved washer may be used.)

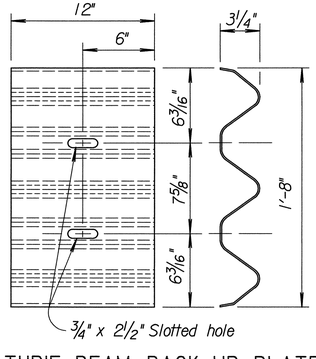

THRIE BEAM BACK-UP PLATE

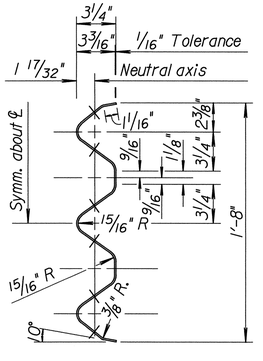

SECTION A-A THRU RAIL ELEMENT
TYPICAL THRIE BEAM

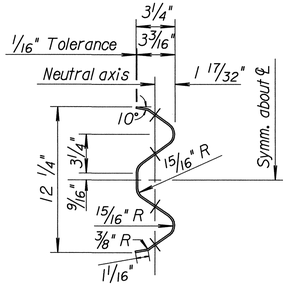

SECTION B-B THRU RAIL ELEMENT
TYPICAL W-BEAM

NO.	DATE	REVISIONS	BY	APP'D
9	5-18-00	Added note for temporary traffic	R.J.S.	J.O.B.
8	6-24-98	Rem. W-Beam backup plate. & note	R.J.S.	J.O.B.
7	11-17-97	Added SRT reference	R.J.S.	J.O.B.
6	6-25-97	Rev. for BEST or LET end terminal	R.J.S.	J.O.B.
5	10-23-95	Rev. for Extruder End Terminal	R.J.S.	J.O.B.
4	6- 1-95	Delete ASTM Reference	R.J.S.	J.O.B.

KANSAS DEPARTMENT OF TRANSPORTATION

DETAILS OF THRIE BEAM
GUARD FENCE TRANSITION

RD613

FHWA APPROVAL	6-15-00	APP'D. James O. Brewer	
DESIGNED	DETAILED	QUANTITIES	TRACED B.N.B.
DESIGN CK.	DETAIL CK.	QUAN.CK.	TRACE CK. R.J.S.

Drawn By : $$USERNAME$$ |Plotted : $$$$$$SYTIME$$$$$$
File : $$$$$$$$$$$$$$$$$$DGN$PEC$$$$$$$$$$$$$$$$$$

Sheet No. 10

E:\WPS\DCAP\RD613rd613.dgn 06/02/2005 02:23:19 PM